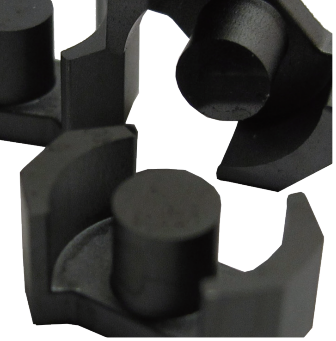
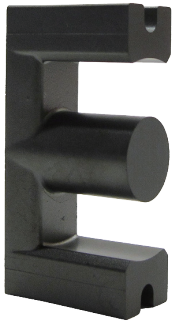

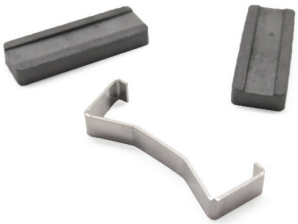
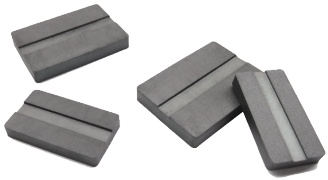

Soft Ferrites and Accessories

Data Handbook

2013

FERROXCUBE
A YAGEO COMPANY

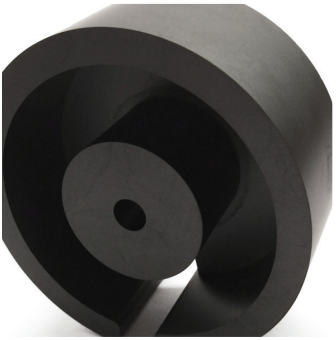

Soft Ferrites and Accessories

Contents **Page**

Introduction	4
Quality	14
Environmental aspects of soft ferrites	15
Ordering information	16
Applications	17
Literature and reference publications	54
Ferrite materials survey and specifications	58
- Ferrite materials survey	59
- Material specifications and graphs	62
Specialty ferrites	176
- Ferrites for particle accelerators (T)	178
- Ferrite building blocks (BLK)	183
- Machined ferrites and special shapes	184
- Ferrites for anechoic chambers (PLT, PLT/H)	186
E cores and Accessories	188
EI cores	308
Planar E cores and Accessories (E, E/R, PLT, PLT/S, PLT/R)	320
EC cores and Accessories	378
EFD cores and Accessories	396
EP cores and Accessories	430
EPX cores and Accessories	464
EQ, EQ/LP cores and Accessories (EQ, EQ/R, EQ/LP, PLT, PLT/S)	480
ER cores	500
Planar ER cores and Accessories	512
ETD cores and Accessories	538
Frame and Bar cores and Accessories (FRM, BAR)	566
Integrated Inductive Components (IIC)	582
P, P/I cores and Accessories	596
PT, PTS, PTS/I cores and Accessories	676
PH cores	702
PM cores	710
PQ cores and Accessories	716

RM, RM/I, RM/ILP cores and Accessories 750
U, I cores and Accessories 846
UR cores 870
Ferroxtag RFID transponders 874
RFID transponder cores (BAR, FAR, TAR) 877
EMI-suppression products / small products 880
Ferroxfoil flexible sheet EMI absorber 882
- Bobbin cores (BC) 885
- Cable shields (CSA, CSC, CSF, CSU, CST) 887
- EMI-suppression beads (BD) 894
- EMI-suppression beads on wire (BDW) 895
- Miniature balun cores (MHB) 896
- Multihole cores (MHC, MHB, MHR) 898
- Multilayer inductors (MLI, MLH) 901
- Multilayer suppressors (MLS, MLP, MLN) 914
- Rods (ROD) 925
- SMD beads (BDS) 926
- SMD common mode chokes (CMS) 931
- SMD wideband chokes (WBS, WBSM) 938
- Tubes (TUB) 947
- Wideband chokes (WBC) 948
Gapped ferrite toroids (TN) 952
Ferrite toroids (T, TC, TN, TX) 960
Alloy powder toroids (TX) 1066
Iron powder toroids (TN) 1098

DATA SHEET STATUS DEFINITIONS

DATA SHEET STATUS	PRODUCT STATUS	DEFINITIONS
Preliminary specification	Development	This data sheet contains preliminary data. Ferroxcube reserves the right to make changes at any time without notice in order to improve design and supply the best possible product.
Product specification	Production	This data sheet contains final specifications. Ferroxcube reserves the right to make changes at any time without notice in order to improve design and supply the best possible product.

DISCLAIMER

Life support applications — These products are not designed for use in life support appliances, devices, or systems where malfunction of these products can reasonably be expected to result in personal injury. Ferroxcube customers using or selling these products for use in such applications do so at their own risk and agree to fully indemnify Ferroxcube for any damages resulting from such application.

PRODUCT STATUS DEFINITIONS

STATUS	INDICATION	DEFINITION
Prototype	prot	These are products that have been made as development samples for the purposes of technical evaluation only. The data for these types is provisional and is subject to change.
Design-in	des	These products are recommended for new designs.
Preferred		These products are recommended for use in current designs and are available via our sales channels.
Support	sup	These products are **not** recommended for new designs and may not be available through all of our sales channels. Customers are advised to check for availability.

THE NATURE OF SOFT FERRITES

Composition

Ferrites are dark grey or black ceramic materials. They are very hard, brittle and chemically inert. Most modern magnetically soft ferrites have a cubic (spinel) structure.

The general composition of such ferrites is $MeFe_2O_4$ where Me represents one or several of the divalent transition metals such as manganese (Mn), zinc (Zn), nickel (Ni), cobalt (Co), copper (Cu), iron (Fe) or magnesium (Mg).

The most popular combinations are manganese and zinc (MnZn) or nickel and zinc (NiZn). These compounds exhibit good magnetic properties below a certain temperature, called the Curie Temperature (T_C). They can easily be magnetized and have a rather high intrinsic resistivity. These materials can be used up to very high frequencies without laminating, as is the normal requirement for magnetic metals.

NiZn ferrites have a very high resistivity and are most suitable for frequencies over 1 MHz, however, MnZn ferrites exhibit higher permeability (μ_i) and saturation induction levels (B_s) and are suitable up to 3 MHz.

For certain special applications, single crystal ferrites can be produced, but the majority of ferrites are manufactured as polycrystalline ceramics.

Manufacturing process

The following description of the production process is typical for the manufacture of our range of soft ferrites, which is marketed under the trade name ‘Ferroxcube’.

Raw materials

The raw materials used are oxides or carbonates of the constituent metals. The final material grade determines the necessary purity of the raw materials used, which, as a result is reflected in the overall cost.

Proportions of the composition

The base materials are weighed into the correct proportions required for the final composition.

Mixing

The powders are mixed to obtain a uniform distribution of the components.

Pre-sintering

The mixed oxides are calcined at approximately 1000 °C. A solid state reaction takes place between the constituents and, at this stage, a ferrite is already formed.

Pre-sintering is not essential but provides a number of advantages during the remainder of the production process.

Milling and granulation

The pre-sintered material is milled to a specific particle size, usually in a slurry with water. A small proportion of organic binder is added, and then the slurry is spray-dried to form granules suitable for the forming process.

Forming

Most ferrite parts are formed by pressing. The granules are poured into a suitable die and then compressed. The organic binder acts in a similar way to an adhesive and a so-called ‘green’ product is formed. It is still very fragile and requires sintering to obtain the final ferrite properties.

For some products, for example, long rods or tubes, the material is mixed into a dough and extruded through a suitable orifice. The final products are cut to the required length before or after sintering.

Sintering

The ‘green’ cores are loaded on refractory plates and sintered at a temperature between 1150 °C and 1300 °C depending on the ferrite grade. A linear shrinkage of up to 20% (50% in volume) takes place. The sintering may take place in tunnel kilns having a fixed temperature and atmosphere distribution or in box kilns where temperature and atmosphere are computer controlled as a function of time. The latter type is more suitable for high grade ferrites which require a very stringent control in conditions.

Finishing

After sintering, the ferrite core has the required magnetic properties. It can easily be magnetized by an external field (see Fig.2), exhibiting the well-known hysteresis effect (see Fig.1). Dimensions are typically within 2% of nominal due to 10- 20% shrinkage. If this tolerance is too large or if some surfaces require a smooth finish (e.g. mating faces between core halves) a grinding operation is necessary. Usually diamond-coated wheels are used. For high permeability materials, very smooth, lapped, mating surfaces are required. If an air-gap is required in the application, it may be provided by centre pole grinding.

Magnetism in ferrites

A sintered ferrite consists of small crystals, typically 10 to 20 μm in dimension. Domains exist within these crystals (Weiss domains) in which the molecular magnets are already aligned (ferrimagnetism). When a driving magnetic field (H) is applied to the material the domains progressively align with it, as shown in Fig.2.

During this magnetization process energy barriers have to be overcome. Therefore the magnetization will always lag behind the field. A so-called hysteresis loop (see Fig.1) is the result.

If the resistance against magnetization is small, a large induced flux will result at a given magnetic field. The value of the permeability is high. The shape of the hysteresis loop also has a marked influence on other properties, for example power losses.

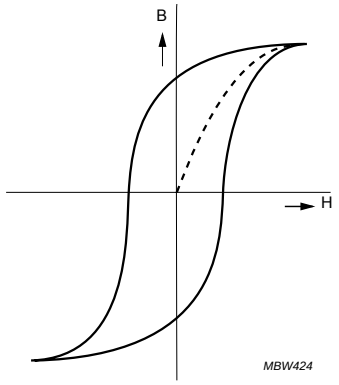

Fig.1 Hysteresis loop.

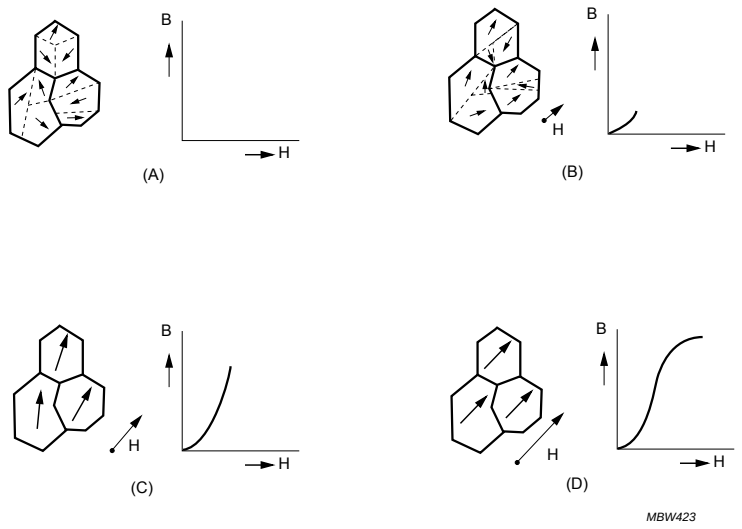

Fig.2 Alignment of domains.

EXPLANATION OF TERMS AND FORMULAE

Symbols and units

SYMBOL	DESCRIPTION	UNIT
A_e	effective cross-sectional area of a core	mm^2
A_{min}	minimum cross-sectional area of a core	mm^2
A_L	inductance factor	nH
B	magnetic flux density	T
B_r	remanence	T
B_s	saturation flux density	T
$\hat{B}$	peak (amplitude) flux density	T
C	capacitance	F
D_F	disaccomodation factor	–
f	frequency	Hz
G	gap length	μm
H	magnetic field strength	A/m
H_c	coercivity	A/m
$\hat{H}$	peak (amplitude) magnetic field strength	A/m
I	current	A
U	voltage	V
l_e	effective magnetic path length	mm
L	inductance	H
N	number of turns	–
P_v	specific power loss of core material	kW/m^3
Q	quality factor	–
T_c	Curie temperature	°C
THD/μ_a	Total Harmonic Distortion factor	dB
V_e	effective volume of core	mm^3
α_F	temperature factor of permeability	K^{-1}
$\tan\delta/\mu_i$	loss factor	–
η_B	hysteresis material constant	T^{-1}
μ	absolute permeability	–
μ_o	magnetic constant ($4\pi \times 10^{-7}$)	Hm^{-1}
μ_s'	real component of complex series permeability	–
μ_s''	imaginary component of complex series permeability	–
μ_a	amplitude permeability	–
μ_e	effective permeability	–
μ_i	initial permeability	–
μ_r	relative permeability	–
μ_{rev}	reversible permeability	–
μ_Δ	incremental permeability	–
ρ	resistivity	Ωm
Σ(l/A)	core factor (C1)	mm^{-1}

Definition of terms

PERMEABILITY

When a magnetic field is applied to a soft magnetic material, the resulting flux density is composed of that of free space plus the contribution of the aligned domains.

$$B = \mu_0 H + J \quad \text{or} \quad B = \mu_0 (H + M) \qquad (1)$$

where $\mu_0 = 4\pi.10^{-7}$ H/m, J is the magnetic polarization and M is the magnetization.

The ratio of flux density and applied field is called absolute permeability.

$$\frac{B}{H} = \mu_0\left(1 + \frac{M}{H}\right) = \mu_{absolute} \qquad (2)$$

It is usual to express this absolute permeability as the product of the magnetic constant of free space and the relative permeability (μ_r).

$$\frac{B}{H} = \mu_0 \mu_r \qquad (3)$$

Since there are several versions of μ_r depending on conditions the index 'r' is generally removed and replaced by the applicable symbol e.g. μ_i, μ_a, μ_Δ etc.

INITIAL PERMEABILITY

The initial permeability is measured in a closed magnetic circuit (ring core) using a very low field strength.

$$\mu_i = \frac{1}{\mu_0} \times \frac{\Delta B}{\Delta H}_{(\Delta H \to 0)} \qquad (4)$$

Initial permeability is dependent on temperature and frequency.

EFFECTIVE PERMEABILITY

If the air-gap is introduced in a closed magnetic circuit, magnetic polarization becomes more difficult. As a result, the flux density for a given magnetic field strength is lower.

Effective permeability is dependent on the initial permeability of the soft magnetic material and the dimensions of air-gap and circuit.

$$\mu_e = \frac{\mu_i}{1 + \frac{G \times \mu_i}{l_e}} \qquad (5)$$

where G is the gap length and l_e is the effective length of magnetic circuit. This simple formula is a good approximation only for small air-gaps. For longer air-gaps some flux will cross the gap outside its normal area (stray flux) causing an increase of the effective permeability.

AMPLITUDE PERMEABILITY

The relationship between higher field strength and flux densities without the presence of a bias field, is given by the amplitude permeability.

$$\mu_a = \frac{1}{\mu_0} \times \frac{\hat{B}}{\hat{H}} \qquad (6)$$

Since the BH loop is far from linear, values depend on the applied field peak strength.

INCREMENTAL PERMEABILITY

The permeability observed when an alternating magnetic field is superimposed on a static bias field, is called the incremental permeability.

$$\mu_\Delta = \frac{1}{\mu_0}\left[\frac{\Delta B}{\Delta H}\right]_{H_{DC}} \qquad (7)$$

If the amplitude of the alternating field is negligibly small, the permeability is then called the reversible permeability (μ_{rev}).

COMPLEX PERMEABILITY

A coil consisting of windings on a soft magnetic core will never be an ideal inductance with a phase angle of 90°. There will always be losses of some kind, causing a phase shift, which can be represented by a series or parallel resistance as shown in Figs 3 and 4.

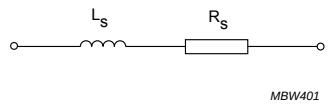

Fig.3 Series representation.

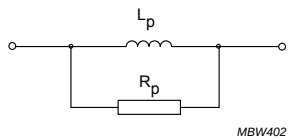

Fig.4 Parallel representation.

For series representation

$$\bar{Z} = j\omega L_s + R_s \quad (8)$$

and for parallel representation,

$$\bar{Z} = \frac{1}{1/(j\omega L_p) + 1/R_p} \quad (9)$$

the magnetic losses are accounted for if a resistive term is added to the permeability.

$$\mu = \mu_s' - j\mu_s'' \quad \text{or} \quad \frac{1}{\bar{\mu}} = \frac{1}{\mu'_p} - \frac{1}{\mu''_p} \quad (10)$$

The phase shift caused by magnetic losses is given by:

$$\tan\delta_m = \frac{R_s}{\omega L_s} = \frac{\mu''_s}{\mu'_s} \quad \text{or} \quad \frac{\omega L_p}{R_p} = \frac{\mu'_p}{\mu''_p} \quad (11)$$

For calculations on inductors and also to characterize ferrites, the series representations is generally used (μ'_s and μ''_s). In some applications e.g. signal transformers, the use of the parallel representation (μ'_p and μ''_p) is more convenient.

The relationship between the representations is given by:

$$\mu'_p = \mu'_s(1 + \tan\delta^2) \quad \text{and} \quad \mu''_p = \mu''_s\left(1 + \frac{1}{\tan\delta^2}\right) \quad (12)$$

LOSS FACTOR

The magnetic losses which cause the phase shift can be split up into three components:

1. Hysteresis losses
2. Eddy current losses
3. Residual losses.

This gives the formula:

$$\tan\delta_m = \tan\delta_h + \tan\delta_f + \tan\delta_r \quad (13)$$

Figure 5 shows the magnetic losses as a function of frequency.

Hysteresis losses vanish at very low field strengths. Eddy current losses increase with frequency and are negligible at very low frequency. The remaining part is called residual loss. It can be proven that for a gapped magnetic circuit, the following relationship is valid:

$$\frac{(\tan\delta_m)_{gapped}}{\mu_e - 1} = \frac{\tan\delta_m}{\mu_i - 1} \quad (14)$$

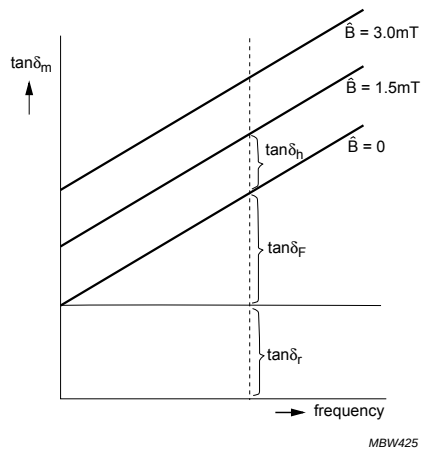

Fig.5 Magnetic losses $(\tan\delta_m)$ as a function of frequency.

Since μ_i and μ_e are usually much greater than 1, a good approximation is:

$$\frac{(\tan\delta_m)_{gapped}}{\mu_e} = \frac{\tan\delta_m}{\mu_i} \quad (15)$$

From this formula, the magnetic losses in a gapped circuit can be derived from:

$$(\tan\delta_m)_{gapped} = \frac{\tan\delta_m}{\mu_i} \times \mu_e \quad (16)$$

Normally, the index 'm' is dropped when material properties are discussed:

$$(\tan\delta)_{gapped} = \frac{\tan\delta}{\mu_i} \times \mu_e \quad (17)$$

In material specifications, the loss factor ($\tan\delta/\mu_i$) is used to describe the magnetic losses. These include residual and eddy current losses, but not hysteresis losses.

For inductors used in filter applications, the quality factor (Q) is often used as a measure of performance. It is defined as:

$$Q = \frac{1}{\tan\delta} = \frac{\omega L}{R_{tot}} = \frac{\text{reactance}}{\text{total resistance}} \quad (18)$$

The total resistance includes the effective resistance of the winding at the design frequency.

HYSTERESIS MATERIAL CONSTANT

When the flux density of a core is increased, hysteresis losses are more noticeable. Their contribution to the total losses can be obtained by means of two measurements, usually at the induction levels of 1.5 mT and 3 mT. The hysteresis constant is found from:

$$\eta_B = \frac{\Delta \tan\delta_m}{\mu_e \times \Delta\hat{B}} \quad (19)$$

The hysteresis loss factor for a certain flux density can be calculated using:

$$\frac{\tan\delta_h}{\mu_e} = \eta_B \times \hat{B} \quad (20)$$

This formula is also the IEC definition for the hysteresis constant.

EFFECTIVE CORE DIMENSIONS

To facilitate calculations on a non-uniform soft magnetic cores, a set of effective dimensions is given on each data sheet. These dimensions, effective area (A_e), effective length (l_e) and effective volume (V_e) define a hypothetical ring core which would have the same magnetic properties as the non-uniform core.

The reluctance of the ideal ring core would be:

$$\frac{l_e}{\mu \times A_e} \quad (21)$$

For the non-uniform core shapes, this is usually written as:

$$\frac{1}{\mu_e} \times \Sigma\frac{l}{A} \quad (22)$$

the core factor divided by the permeability. The inductance of the core can now be calculated using this core factor:

$$L = \frac{\mu_0 \times N^2}{\frac{1}{\mu_e} \times \Sigma\frac{l}{A}} \quad (23)$$

The effective area is used to calculate the flux density in a core,

for sine wave:

$$\hat{B} = \frac{U\sqrt{2}}{\omega A_e N} = \frac{U}{\pi\sqrt{2} \times fNA_e} \quad (24)$$

for square wave:

$$\hat{B} = \frac{\hat{U}}{4 \times fNA_e} \quad (25)$$

The magnetic field strength (H) is calculated using the effective length (l_e):

$$\hat{H} = \frac{IN\sqrt{2}}{l_e} \quad (26)$$

If the cross-sectional area of a core is non-uniform, there will always be a point where the real cross-section is minimal. This value is known as A_{min} and is used to calculate the maximum flux density in a core. A well designed ferrite core avoids a large difference between A_e and A_{min}. Narrow parts of the core could saturate or cause much higher hysteresis losses.

INDUCTANCE FACTOR (A_L)

To make the calculation of the inductance of a coil easier, the inductance factor, known as the A_L value, is given in each data sheet (in nano Henry). The inductance of the core is defined as:

$$L = N^2 \times A_L \quad (27)$$

The value is calculated using the core factor and the effective permeability:

$$A_L = \frac{\mu_0\mu_e}{\Sigma(l/A)} \quad (28)$$

MAGNETIZATION CURVES (H_C, B_R, B_S)

If an alternating field is applied to a soft magnetic material, a hysteresis loop is obtained. For very high field strengths, the maximum attainable flux density is reached. This is known as the saturation flux density (B_s).

If the field is removed, the material returns to a state where, depending on the material grade, a certain flux density remains. This the remanent flux density (B_r).

This remanent flux returns to zero for a certain negative field strength which is referred to a coercivity (H_c).

These points are clearly shown in Fig.6.

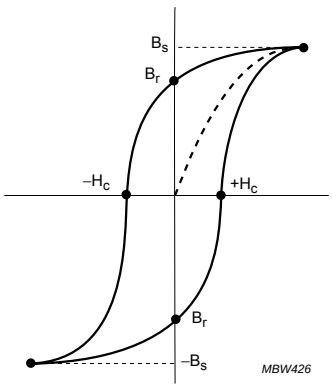

Fig.6 Typical BH curve showing points B_s, B_r and H_c.

TEMPERATURE DEPENDENCE OF THE PERMEABILITY

The permeability of a ferrite is a function of temperature. It generally increases with temperature to a maximum value and then drops sharply to a value of 1. The temperature at which this happens is called the Curie temperature (T_c). Typical curves of our grades are given in the material data section.

For filter applications, the temperature dependence of the permeability is a very important parameter. A filter coil should be designed in such a way that the combination it forms with a high quality capacitor results in an LC filter with excellent temperature stability.

The temperature coefficient (TC) of the permeability is given by:

$$TC = \frac{(\mu_i)_{T2} - (\mu_i)_{T1}}{(\mu_i)_{T1}} \times \frac{1}{T_2 - T_1} \qquad (29)$$

For a gapped magnetic circuit, the influence of the permeability temperature dependence is reduced by the factor μ_e/μ_i. Hence:

$$TC_{gap} = \frac{\mu_e}{(\mu_i)_{T1}} \times \frac{(\mu_i)_{T2} - (\mu_i)_{T1}}{(\mu_i)^2_{T1}} \times \left(\frac{1}{T_2 - T_1}\right) \qquad (30)$$

$$= \mu_e \times \alpha_F$$

So α_F is defined as:

$$\alpha_F = \frac{(\mu_i)_{T2} - (\mu_i)_{T1}}{(\mu_i)^2_{T1}} \times \frac{1}{T_2 - T_1} \qquad (31)$$

Or, to be more precise, if the change in permeability over the specified area is rather large:

$$\alpha_F = \frac{(\mu_i)_{T2} - (\mu_i)_{T1}}{(\mu_i)_{T1} \times (\mu_i)_{T2}} \times \frac{1}{T_2 - T_1} \qquad (32)$$

The temperature factors for several temperature trajectories of the grades intended for filter applications are given in the material specifications. They offer a simple means to calculate the temperature coefficient of any coil made with these ferrites.

TOTAL HARMONIC DISTORTION (THD)

Harmonic distortion is generated when a sine wave magnetic field H, which is proportional to the current, induces a non-sinusoidal flux density B. This is due to a non linear relation between B and H in the ferrite core of a transformer. Consequently the induced output voltage, which is proportional to the flux density B, is also not a pure sine wave, but somewhat distorted. The periodic voltage signals can be decomposed by writing them as the sum of sine waves with frequencies equal to multiples of the fundamental frequency.
For signals without bias, the THD is defined as the ratio of: the square root of the sum of the quadratic amplitudes of the (uneven) higher harmonic voltages and, the amplitude of the fundamental frequency (V_1). It is often sufficient to consider only the strongly dominant third harmonic for the THD. In that case the definition of THD can be simplified to:

$THD \approx V_3 / V_1$ or $20 \times {}^{10}\log (V_3 / V_1)$ [dB]

Introducing an airgap in a core set reduces the THD in the same way as it reduces temperature dependence and magnetic losses, which shows that the THD is not a pure material characteristic. It can be shown by calculation and measurement that THD/μ_{ae} is a real material characteristic. It is a function of flux density (B), frequency (f) and temperature (T), but not of the airgap length in a core set. THD/μ_{ae} is defined as the THD-factor, denoted as THD_F.

The term μ_{ae} stands for effective amplitude permeability of the ferrite material. It is a more general term than the effective permeability μ_e which is only defined for very low flux densities (< 0.25 mT).

Published data of this THD-factor (THD_F) as a function of frequency (f), flux density (B) and temperature (T) can

directly be used to predict the THD in gapped core sets (THD_C) at the applicable operating conditions of f, B and T.

$$THD_C = THD_F + 20 \times {}^{10}\log(\mu_{ae})\ [dB] \quad (33)$$

THD MEASUREMENTS

Measured THD values as well as accuracies depend on the impedances in the measuring circuit used.

Fig.7 shows an equivalent THD test or measuring circuit. In Fig.8 a simplified equivalent circuit is shown with the generated (V_{F3}) and measured third harmonic voltage (V_{M3}).

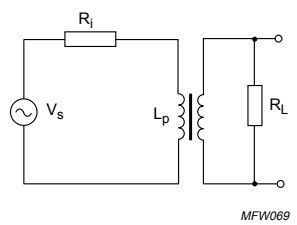

Fig.7 Equivalent test circuit for THD measurement.

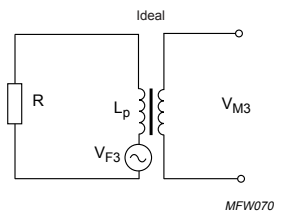

Fig.8 Equivalent test circuit for THD measurement.

The test circuit consists basically of a voltage source and a measuring device capable of measuring the third harmonic voltage or directly the THD. Both devices are often combined in one instrument like e.g. an audio analyzer which is represented by V_s in Fig.7.

R_i represents the total equivalent resistance in the primary circuit, which consists of the internal resistance of the voltage source, possibly in combination with other resistors in this part of the circuit. L_p is the inductance of the transformer under test connected to the load resistance R_L.

The generated third harmonic voltage V_{F3} will cause a current flow through the impedances R_i and R_L, resulting in a voltage drop. These impedances are combined to one equivalent resistance R as shown in Fig.8. This equivalent resistance can be calculated with:

$$R = \frac{R_i \times R_{L_P}}{R_i + R_{L_P}} \quad (34)$$

in which R_{Lp} is R_L referred to the primary side:

$$R_{L_P} = \left(\frac{N_p}{N_s}\right)^2 \times R_L \quad (35)$$

Hardly any voltage drop will occur when R is very high compared to the impedance $3\omega L_p$. In that case the measured third harmonic voltage V_{M3} would be equal to the real generated third harmonic V_{F3} multiplied by the transformation ratio N_s/N_p.

The measuring situation would be fully current driven. However in practical situations the resistance R will play a role and V_{F3} can be calculated with equation:

$$V_{F3} = V_{M3} \times \frac{N_p}{N_s} \times \sqrt{1 + (3\omega L_p / R)^2} \quad (36)$$

MEASUREMENT PRECAUTIONS

In general it is advised to check measuring conditions and the test circuit with impedances R and ωL_p in order to keep the circuit correction factor as low as possible. This avoids measuring in non-discriminating ranges (< –80 dB), which may lead to inaccurate or useless results. It is recommended to use low measuring frequencies, preferably < 25 kHz, for several reasons. At high frequencies it will often be difficult to reach the required flux level in the core of the transformer or inductor because of output voltage limitations. The real generated THD by the ferrite core ($THD_C \approx V_{F3}/V_{F1}$) can be related to the THD which is measured in the circuitry ($THD_M \approx V_{M3}/V_{M1}$) by knowing that $V_{F1} = V_{M1} \times (N_p/N_s)$. By using equation [36] this relation is as follows :

$$THD_M = \frac{1}{\sqrt{1 + (3\omega L_p / R)^2}} \times THD_C = CCF \times THD_C \quad (37)$$

The inverse square root term in equation [37] is the circuit correction factor (CCF). To get the measured THD in terms of the factor THD_F, equation [37] must be combined with [33] which gives in units of dB :

$$THD_M = THD_F + 20 \times {}^{10}\log(\mu_{ae} \times CCF) \quad (38)$$

To make use of equation [38] in practice, the following route can be followed :

The first step is to determine the voltage which will appear across the transformer. This is the voltage V_{Lp} across the inductance L_p in figure 8. If this value is not known from the (test) specification, it can be derived from the source voltage V_s. The relation between the source voltage V_s, the primary voltage V_{Lp} and the secondary voltage V_{RL} is given in equations [39] and [40] :

$$V_{Lp} = V_s \times \left| \frac{j\omega L_p \parallel R_{Lp}}{R_i + (j\omega L_p \parallel R_{Lp})} \right| \quad (39)$$

or

$$V_{Lp} = V_s \times \frac{1}{\sqrt{(1 + R_i/R_{Lp})^2 + (R_i/\omega L_p)^2}} \quad (40)$$

and $V_{RL} = (N_s/N_p) \times V_{Lp}$.

The second step is to use Faraday's law for induction to find the flux density B in the transformer. In case the voltage V_{LP} is a sinusoidal rms voltage, the relation to the peak flux density B_{peak} can be written as :

$$V_{Lp} = ½\sqrt{2} \,.\, \omega \,.\, N_1 \,.\, A_e \,.\, B_{peak} \quad (41)$$

The third step is to use the published curves on THD_F (as e.g. in fig. 4, 5 and 6 for 3E55) to determine the THD_F under the application conditions of f, B and T.

The last step is to use equation [38] to calculate the THD which will be measured and, to check whether this value is in line with the requirement (specification).

Time stability

When a soft magnetic material is given a magnetic, mechanical or thermal disturbance, the permeability rises suddenly and then decreases slowly with time. For a defined time interval, this 'disaccommodation' can be expressed as:

$$D = \frac{\mu_1 - \mu_2}{\mu_1} \quad (42)$$

The decrease of permeability appears to be almost proportional to the logarithm of time. For this reason, IEC has defined a disaccommodation coefficient:

$$d = \frac{\mu_1 - \mu_2}{\mu_1 \times \log(t_2/t_1)} \quad (43)$$

Where t_1 and t_2 are time intervals after the disturbance. As with temperature dependence, the influence of disaccommodation on the inductance drift of a coil will be reduced by μ_e/μ_i.

Therefore, a disaccommodation factor D_F is defined:

$$D_F = \frac{d}{\mu_i} = \frac{\mu_1 - \mu_2}{\mu_1^2 \times \log(t_2/t_1)} \quad (44)$$

Usually ferrite cores are magnetically conditioned by means of a saturating alternating field which is gradually reduced to zero. Measurements for our data sheets are taken 10 and 100 minutes after this disturbance.
The variability with time of a coil can now easily be predicted by:

$$\frac{L_1 - L_2}{L_1} = \mu_e \times D_F \quad (45)$$

L_1 and L_2 are values at 2 time intervals after a strong disturbance.

RESISTIVITY

Ferrite is a semiconductor with a DC resistivity in the crystallites of the order of 10^{-3} Ωm for a MnZn type ferrite, and about 30 Ωm for a NiZn ferrite.

Since there is an isolating layer between the crystals, the bulk resistivity is much higher: 0.1 to 10 Ωm for MnZn ferrites and 10^4 to 10^6 Ωm for NiZn and MgZn ferrites.

This resistivity depends on temperature and measuring frequency, which is clearly demonstrated in Tables 1 and 2 which show resistivity as a function of temperature for different materials.

Table 1 Resistivity as a function of temperature of a MnZn-ferrite (3C94)

TEMPERATURE (°C)	RESISTIVITY (Ωm)
−20	≈10
0	≈7
20	≈4
50	≈2
100	≈1

Table 2 Resistivity as a function of temperature of a NiZn-ferrite (4C65)

TEMPERATURE (°C)	RESISTIVITY (Ωm)
0	$\approx 5.10^7$
20	$\approx 10^7$
60	$\approx 10^6$
100	$\approx 10^5$

At higher frequencies the crystal boundaries are more or less short-circuited by heir capacitance and the measured resistivity decreases, as shown in Tables 3 and 4.

Table 3 Resistivity as function of frequency for MnZn ferrites

FREQUENCY (MHz)	RESISTIVITY (Ωm)
0.1	≈2
1	≈0.5
10	≈0.1
100	≈0.01

Table 4 Resistivity as function of frequency for NiZn ferrites

FREQUENCY (MHz)	RESISTIVITY (Ωm)
0.1	$\approx 10^5$
1	$\approx 5.10^4$
10	$\approx 10^4$
100	$\approx 10^3$

Permittivity

The basic permittivity of all ferrites is of the order of 10. This is valid for MnZn and NiZn materials. The isolating material on the grain boundaries also has a permittivity of approximately 10. However, if the bulk permittivity of a ferrite is measured, very different values of apparent permittivity result. This is caused by the conductivity inside the crystallites. The complicated network of more or less leaky capacitors also shows a strong frequency dependence.

Tables 5 and 6 show the relationship between permittivity and frequency for both MnZn and NiZn ferrites.

Table 5 Permittivity as a function of frequency for MnZn ferrites

FREQUENCY (MHz)	PERMITTIVITY (ε_r)
0.1	$\approx 2.10^5$
1	$\approx 10^5$
10	$\approx 5.10^4$
100	$\approx 10^4$

Table 6 Permittivity as a function of frequency for NiZn ferrites

FREQUENCY (MHz)	PERMITTIVITY (ε_r)
0.001	≈100
0.01	≈50
1	≈25
10	≈15
100	≈12

QUALITY

Quality standards

Our ferrite cores are produced to meet constantly high quality standards. High quality components in mass production require advanced production techniques as well as background knowledge of the product itself. The quality standard is achieved in our ferrite production centres by implementation of a Quality Assurance System based on ISO9001 and our process control is based on SPC techniques.

To implement SPC, the production is divided in stages which correspond to production steps or groups of steps. The output of each stage is statistically checked in accordance with MIL STD 414 and 105D.

The obtained results are measured against built-in control, warning and rejects levels. If an unfavourable trend is observed in the results from a production stage, corrective and preventive actions are immediately taken. Quality is no longer “inspected-in” but “built-in” by continuous improvement.

The system is applicable for the total manufacturing process including,

- Raw material
- Production of process
- Finished products.

All our production centres are complying with the ISO 9000 quality system.

Aspects of quality

When describing the quality of a product, three aspects must be taken into account:

- Delivery quality
- Fitness for use
- Reliability.

Delivery quality

After production, the ferrite components are tested once again for their main characteristics. Tests are conducted in accordance with the guidelines specified by IEC 62044. If a component does not comply with the specification published in this handbook, it is considered to be defective. A sampling system, in accordance with ISO 2859 and ISO 3951 is used. The Acceptable Quality Levels (AQL's) are generally set at 0.25%.

Different criteria can be agreed upon for customized products. Also PPM agreements with customers are encouraged.

Customers may follow the same system to carry out incoming inspections. If the percentage of defects does not exceed the specified level, the probability that the batch will be accepted is high (>90%), but rejection is still possible.

If the reject level is much lower than specified, quality complaints will disappear. We aim at very low reject levels to eventually allow any customers to dispose with incoming inspection.

Fitness for use

This is a measure of component quality up to the point where the component has been assembled into the equipment and is quoted in parts per million (PPM). After assembly, the component should function fully. The PPM concept covers the possibility of failures that occur during assembly. It includes line rejects that may occur for any reason.

For ferrite cores, co-operation between the component supplier and the customer is a very important aspect. The core is generally a building block for a wound component and many things can go wrong during the assembly process, but the core is not always the problem. A mutual quality control programme can be established to minimize line rejects for a specific application. For some product lines, levels of 30 PPM have already been realized.

Reliability

Ferrite cores are known for their reliability. Once the assembly process has been successfully concluded, no real threats for the life of the ferrite are known.

Reliability is mainly governed by the quality of the total assembly of the wound component. Extreme thermal shocks should be avoided.

ENVIRONMENTAL ASPECTS OF SOFT FERRITES

Our range of soft ferrites has the general composition $MeFe_2O_4$ where Me represents one or several of the divalent transition metals such as manganese (Mn), zinc (Zn), nickel (Ni), or magnesium (Mg).

To be more specific, all materials starting with digit 3 are manganese zinc ferrites based on the MnZn composition.

Their general chemical formula is:

$Mn_{\delta}\ Zn_{(1-\delta)}\ Fe_2\ O_4$

Materials starting with digit 4 are nickel zinc ferrites based on the NiZn composition. Their general chemical formula is:

$Ni_{\delta}\ Zn_{(1-\delta)}\ Fe_2\ O_4$

Materials starting with digit 2 are magnesium zinc ferrites based on the MgZn composition. Their general chemical formula is:

$Mg_{\delta}\ Zn_{(1-\delta)}\ Fe_2\ O_4$

General warning rules

- With strong acids, the metals iron, manganese, nickel and zinc may be partially extracted.
- In the event of fire, dust particles with metal oxides will be formed.
- Disposal as industrial waste, depending on local rules and circumstances.

Information about RoHS compliance

Ferroxcube warrants that all products supplied by Ferroxcube do not contain the hazardous substances as described by the directive 2002/95/EC and 2003/11/EC of the European Parliament and the Council of January 27th 2003 and February 6th 2003 “On the restriction of the use of certain hazardous substances in electrical and electronic equipment” (RoHS).

This warranty applies to :

- All bare ferrite cores
- Coated toroids (nylon, epoxy, parylene)
- Encapsulated (plastic) toroids
- Encapsulated (plastic) cable shields
- Coilformers and mounting plates (plastic and metal)
- Metal parts
- Wound ferrites (metal)
- Multi-layer inductors and suppressors (metal)

ORDERING INFORMATION

The products in this handbook are identified by type numbers. All physical and technical properties of the product are expressed by these numbers. They are therefore recommended for both ordering and use on technical drawings and equipment parts lists.

The 11-digit code, used in former editions of this data handbook, also appears on packaging material.

Smallest Packaging Quantities (SPQ) are packs which are ready for shipment to our customers. The information on the barcoded label consists of:

- Technical information:
  - type number
  - 11-digit code number
  - delivery and/or production batch numbers
- Logistic information:
  - 12-digit code number
  - quantity
  - country of origin
  - production week
  - production centre.

The 12-digit code used on the packaging labels, provides full logistic information as well.

During all stages of the production process, data are collected and documented with reference to a unique batch number, which is printed on the packaging label. With this batch number it is always possible to trace the results of process steps afterwards and in the event of customer complaints, this number should always be quoted.

Products are available troughout their lifecycle. A short definition of product status is given in the table “Product status definitions”.

Product status definitions

STATUS	INDICATION	DEFINITION
Prototype	prot	These are products that have been made as development samples for the purposes of technical evaluation only. The data for these types is provisional and is subject to change.
Design-in	des	These products are recommended for new designs.
Preferred		These products are recommended for use in current designs and are available via our sales channels.
Support	sup	These products are **not** recommended for new designs and may not be available through all of our sales channels. Customers are advised to check for availability.

APPLICATIONS

Introduction

Soft ferrite cores are used wherever effective coupling between an electric current and a magnetic flux is required. They form an essential part of inductors and transformers used in today's main application areas:

- Telecommunications
- Power conversion
- Interference suppression.

The function that the soft magnetic material performs may be one or more of the following:

FILTERING

Filter network with well defined pass-band.

High Q-values for selectivity and good temperature stability.

Material requirements:

- Low losses
- Defined temperature factor to compensate temperature drift of capacitor
- Very stable with time.

Preferred materials: 3D3, 3H3.

INTERFERENCE SUPPRESSION

Unwanted high frequency signals are blocked, wanted signals can pass. With the increasing use of electronic equipment it is of vital importance to suppress interfering signals.

Material requirements:

- High impedance in covered frequency range.

Preferred materials: 3S1, 4S2, 3S3, 3S4, 4C65, 4A11, 4A15, 3B1, 4B1, 3C11, 3E25, 3E5.

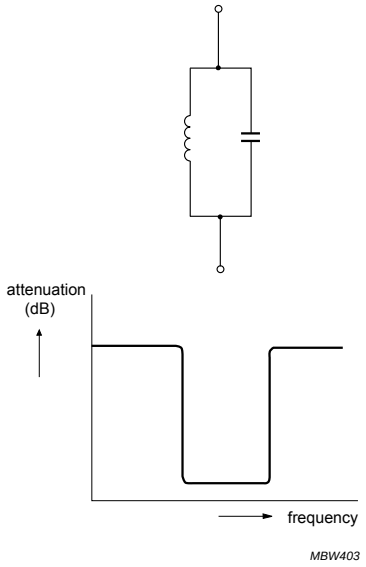

Fig.1 Filter application.

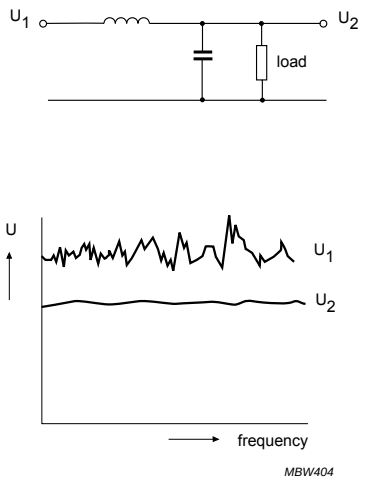

Fig.2 Suppression application.

DELAYING PULSES

The inductor will block current until saturated. Leading edge is delayed depending on design of magnetic circuit.

Material requirements:

- High permeability (μ_i).

Preferred materials: 3E25, 3E5, 3E6, 3E7, 3E8, 3E9.

STORAGE OF ENERGY

An inductor stores energy and delivers it to the load during the off-time of a Switched Mode Power Supply (SMPS).

Material requirements:

- High saturation level (B_s).

Preferred materials: 3C30, 3C34, 3C90, 3C92, 3C96 2P-iron powder.

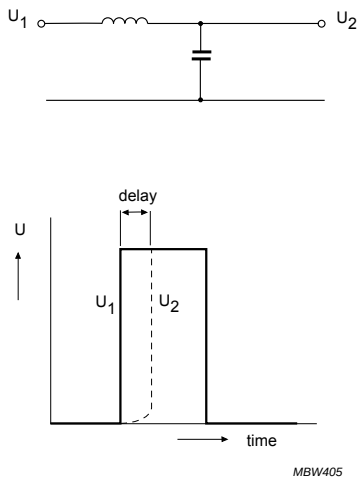

Fig.3 Pulse delay application.

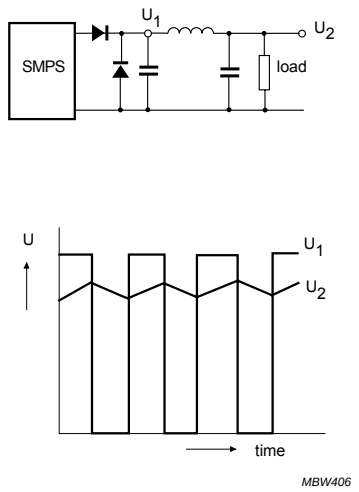

Fig.4 Smoothing/storage application.

PULSE TRANSFORMERS/GENERAL PURPOSE TRANSFORMERS

Pulse or AC signals are transmitted and if required transformed to a higher or lower voltage level. Also galvanic separation to fulfil safety requirements and impedance matching are provided.

Material requirements:

- High permeability
- Low hysteresis factor for low signal distortion
- Low DC sensitivity.

Preferred materials: 3C81, 3H3, 3E1, 3E4, 3E25, 3E27, 3E28, 3E5, 3E6, 3E7, 3E8.

POWER TRANSFORMERS

A power transformer transmits energy, transforms voltage to the required level and provides galvanic separation (safety).

Material requirements:

- Low power losses
- High saturation (B_s).

Preferred materials: 3C15, 3C30, 3C34, 3C81, 3C90, 3C91, 3C93, 3C94, 3C96, 3F3, 3F35, 3F4, 3F45, 3F5, 4F1.

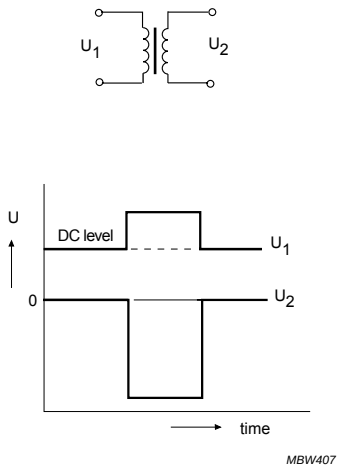

Fig.5 Pulse and general purpose transformer.

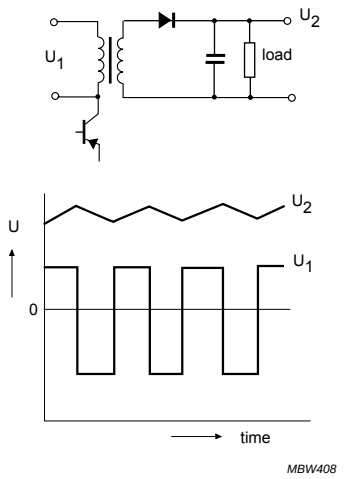

Fig.6 Power transformer application.

TUNING

LC filers are often used to tune circuits in audio, video and measuring equipment. A very narrow bandwidth is often not wanted.

Material requirements:

- Moderate losses up to high frequency
- Reasonable temperature stability.

Preferred materials: 3D3, 4A11, 4B1, 4C65, 4D2, 4E1.

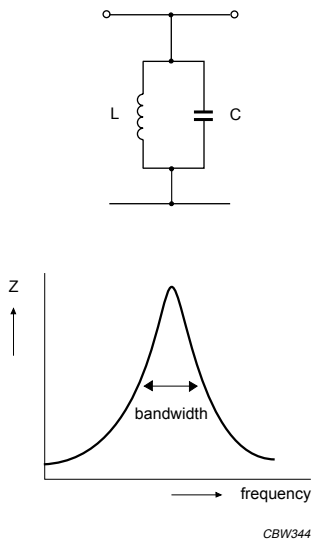

Fig.7 Tuning application.

Ferrites for Telecommunications

Telecommunications is the first important branch of technology where ferrites have been used on a large scale. Today, against many predictions, it still is an important market for ferrite cores.

Most important applications are in:

- Filter inductors
- Pulse and matching transformers.

FILTER COILS

P cores and RM cores have been developed specially for this application.

The P core is the oldest design. It is still rather popular because the closed shape provides excellent magnetic screening.

RM cores are a later design, leading to a more economic usage of the surface area on the PCB.

For filter coils, the following design parameters are important:

- Precise inductance value
- Low losses, high Q value
- High stability over periods of time
- Fixed temperature dependence.

Q VALUE

The quality factor (Q) of a filter coil should generally be as high as possible. For this reason filter materials such as 3H3 and 3D3 have low magnetic losses in their frequency ranges.

Losses in a coil can be divided into:

- Winding losses, due to the DC resistance of the wire eddy-current losses in the wire, electric losses in insulation
- Core losses, due to hysteresis losses in the core material, eddy-current and residual losses in the core material.

Losses appear as series resistances in the coil:

$$\frac{R_{tot}}{L} = \frac{R_0}{L} + \frac{R_{ec}}{L} + \frac{R_d}{L} + \frac{R_h}{L} + \frac{R_{e+r}}{L} \ (\Omega/H)$$

As a general rule, maximum Q is obtained when the sum of the winding losses is made equal to the sum of the core losses.

DC resistive losses

The DC resistive losses in a winding are given by:

$$\frac{R_0}{L} = \frac{1}{\mu_e} \times \frac{1}{f_{Cu}} \times \text{constant} \ (\Omega/H)$$

The space (copper) factor f_{Cu} depends on wire diameter, the amount of insulation and the method of winding.

Eddy-current losses in the winding

Eddy-current losses in a winding are given by:

$$\frac{R_{ec}}{L} = \frac{C_{wCu} V_{Cu} f^2 d^2}{\mu_e} \ (\Omega/H)$$

Where C_{wCu} is the eddy-current loss factor for the winding and depends on the dimensions of the coil former and core, and V_{Cu} is the volume of conductor in mm^3, d is the diameter of a single wire in mm.

Dielectric losses

The capacitances associated with the coil are not loss free. They have a loss factor which also increases the effective coil resistance:

$$\frac{R_d}{L} = \omega^3 LC\left(\frac{2}{Q} + \tan\delta_c\right) \ (\Omega/H)$$

Hysteresis losses

The effective series resistance due to hysteresis losses is calculated from the core hysteresis constant, the peak flux density, the effective permeability and the operating frequency:

$$\frac{R_h}{L} = \omega \eta_B \hat{B} \mu_e \ (\Omega/H)$$

Eddy-current and residual losses

The effective series resistance due to eddy-current and residual losses is calculated from the loss factor:

$$\frac{R_{e+r}}{L} = \omega \mu_e (\tan\delta/\mu_i) \ (\Omega/H)$$

INDUCTOR DESIGN

The specification of an inductor usually includes:

- The inductance
- Minimum Q at the operating frequency
- Applied voltage
- Maximum size
- Maximum and minimum temperature coefficient
- Range of inductance adjustment.

To satisfy these requirements, the designer has the choice of:

- Core size
- Material grade
- A_L value
- Type of conductor (solid or bunched)
- Type of adjuster.

FREQUENCY, CORE TYPE AND MATERIAL GRADE

The operating frequency is a useful guide to the choice of core type and material.

- Frequencies below 20 kHz:
  the highest Q will be obtained with large, high inductance-factor cores of 3H3 material. Winding wire should be solid, with minimum-thickness insulation.

  Note: high inductance factors are associated with high temperature coefficients of inductance.
- Frequencies between 20 kHz and 200 kHz:
  high Q will generally be obtained with a core also in 3H3. Maximum Q will not necessarily be obtained from the large-size core, particularly at higher frequencies, so the choice of inductance factor is less important. Bunched, stranded conductors should be used to reduce eddy-current losses in the copper. Above 50 kHz, the strands should not be thicker than 0.07 mm.
- Frequencies between 200 kHz and 2 MHz:
  use a core of 3D3 material. Bunched conductors of maximum strand diameter 0.04 mm are recommended.

SIGNAL LEVEL

In most applications, the signal voltage is low. It is good practice to keep wherever possible the operating flux density of the core below 1 mT, at which level the effect of hysteresis is usually negligible. At higher flux densities, it may be necessary to allow for some hysteresis loss and inductance change.

The following expression for third harmonic voltage U_3 may be used as a guide to the amount of distortion:

$$\frac{U_3}{U_1} = 0.6 \tan\delta_h$$

For low distortion, materials with small hysteresis loss factors should be used (e.g. 3H3).

DC POLARIZATION

The effect of a steady, superimposed magnetic field due to an external field or a DC component of the winding current is to reduce the inductance value of an inductor. As with other characteristics, the amount of the decrease depends on the value of the effective permeability. The effect can be reduced by using a gapped core or by choosing a lower permeability material.

A_L VALUE

Since the air gap in ferrite cores can be ground to any length, any value of A_L can be provided within the limits set by the core size. In practice, the range of A_L values has been standardized with values chosen to cover the majority of application requirements.

If a core set is provided with an asymmetrical air gap, this air gap is ground in the upper half. This half is marked with the ferrite grade and A_L value.

For very low A_L values (e.g. 16 to 25) the contribution of the stray inductance will be quite high, resulting in a marked influence of the position of the coil in the core and its number of turns.

Most pre-adjusted cores are provided with an injection-moulded nut for the adjuster.

Continuously variable adjusters can be supplied for pre-adjusted cores of most A_L values. These are specially recommended for filter coils. Maximum adjustment range is 10% to 30%, depending on core type and adjuster.

The A_L factor is the inductance per turn squared (in nH) for a given core:

$$L = N^2 \times A_L \ (\text{nH})$$

The measured A_L value of a core will depend slightly on the coil used for this measurement.

FERROXCUBEPULSE AND SIGNAL TRANSFORMERS

Pulse and signal transformers, also known as wideband transformers, are frequently used in communication systems, including modern digital networks such as, for example ISDN and XDSL.

They provide impedance matching and DC isolation or transform signal amplitudes. Signal power levels are usually low. In order to transmit analog signals or digital pulses without much distortion, good wideband characteristics are needed.

The principal function of the transformer core is to provide optimum coupling between the windings.

The general equivalent circuit of a signal transformer is shown in Fig.8.

The elements of the circuit depicted in Fig.8 may be defined as follows:

E_s = source voltage

R_s = source resistance

R_w = total winding resistance = R1 + R2, where R1 is the primary winding resistance and R2 is the secondary winding resistance referred to the primary

L = total leakage inductance = the primary inductance with the secondary shorted

L_p = open circuit inductance

R_p = the shunt loss resistance representing the core loss

N1, N2 = the primary and referred secondary self or stray capacitance respectively

R_b = load resistance referred to the primary turns ratio.

A high permeability core with polished pole faces results in a large flux contribution, improving the coupling. Open circuit inductance will be high, leakage inductance is kept low compared to this main inductance.

Ring cores are very suitable since they have no air gap and make full use of the high permeability of the ferrite.

The frequency response of a practical transformer is shown in Fig.9.

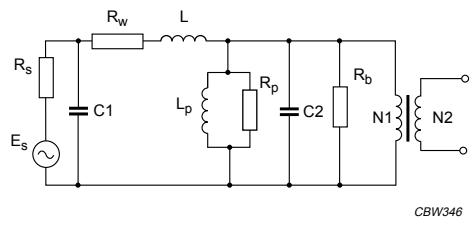

Fig.8 Simplified equivalent circuit of a transformer.

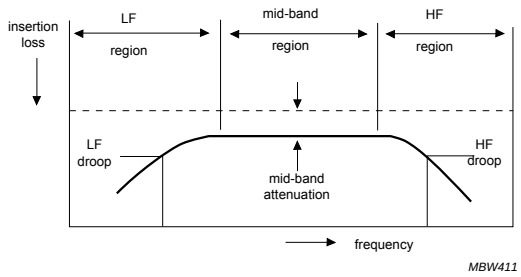

Fig.9 Transmission characteristic of a wideband transformer.

The corresponding distortion of a rectangular pulse by the same circuit is shown in Fig.10.

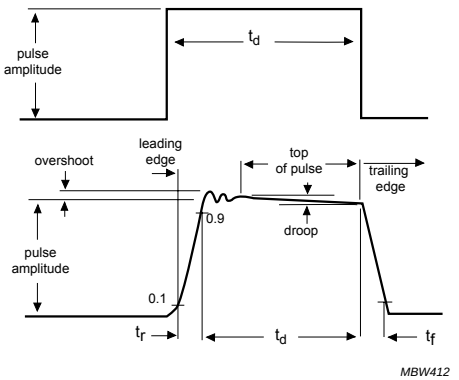

Fig.10 An ideal rectangular pulse and the main pulse distortions that may be introduced by a transformer.

The shunt inductance (L_p) is responsible for the low frequency droop in the analog transformer since its reactance progressively shunts the circuit as the frequency decreases. In the case of the pulse transformer, the shunt inductance causes the top of the pulse to droop, because, during the pulse, the magnetizing current in L_p rises approximately linearly with time causing an increasing voltage drop across the source resistance.

The winding resistance is the main cause of the mid-band attenuation in low frequency analog transformers. In a pulse transformer, it attenuates the output pulse but usually has little effect on the pulse distortion.

The high frequency droop of an analog transformer may be due to either the increasing series reactance of the leakage inductance or the decreasing shunt reactance of the self-capacitances, or a combination of both as the frequency increases. In a pulse transformer, the leakage inductance, self-capacitances and the source or load resistance combine to slow down, or otherwise distort the leading and trailing edge responses.

Suitable core types for this application in the materials 3E1, 3E4, 3E27, 3E28, 3E5, 3E55, 3E6, 3E7 and 3E8 are:

- P cores
- RM cores
- EP cores
- Ring cores
- Small ER cores
- Small E cores.

If the signal is superimposed on a DC current, core saturation my become a problem. In that case the special DC-bias material 3E28 or a lower permeability material such as 3H3, 3C81 or 3C90 is recommended.

Gapping also decreases the effect of bias currents.

Ferrites for Power conversion

Power conversion is one of the major application areas for ferrites and is generally realized by using a switched mode power supply (SMPS). The basic arrangement of a SMPS is shown in Fig.11. In a SMPS, power is efficiently converted into the voltage and current levels, required by the end-application. The wide area in which SMPSs are applied can be divided into four parts: DC-DC, DC-AC, AC-DC and AC-AC. Although every converter type can be found for power conversion, most SMPS applications are based upon the DC-DC (e.g. battery operated equipment) and DC-AC types (e.g. inverters of lamp drivers). Note that many of these converters still have an AC-DC front-end, most of the times nothing more than a rectifier, a smoothing capacitor and a filter for EMC reasons. This front-end does not belong to the SMPS itself and ferrites used in the EMC filter will be treated in the part about interference suppression.

Numerous converter types exist, but most SMPS applications make use of one of the following types :

- Buck or down converter (DC-DC)
- Boost or up converter (DC-DC)
- Flyback converter (DC-DC)
- Forward converter (DC-DC)
- Half and full bridge converter (DC-AC)

Their basic operation principle will first be discussed and after this the focus is put on how to choose the appropriate core material.

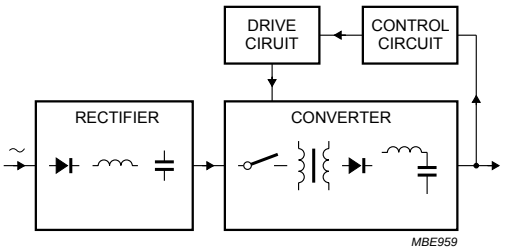

Fig.11 Block diagram of a Switched Mode Power Supply.

BUCK OR DOWN CONVERTER

With a buck or down converter, as shown in Fig.12, it is possible to adapt the input voltage to a lower level. It also means that the average output current is larger than the input current. The basic operation is as follows. During the on-time of the mosfet, a linearly rising current is flowing from the input to the output and energy is stored in the inductor (note that always the largest part of the energy is stored in the air gap and a minor part in the ferrite itself). By the end of the on-time, defined by the ratio of the output voltage and the input voltage, the mosfet is switched off. According to Lenz' law, the inductor voltage reverses and the stored energy results in a decreasing output current via the diode.

Dependent on the operating condition defined by the load, the current through the inductor will be mainly DC (continuous mode) with a triangular ripple on top of it. This means that the ferrite is operating around a DC bias point of B and H. Around this point a minor BH loop can be found.

In all those applications where a lower voltage is needed than the available supply voltage (e.g. automotive), buck converters can be found. Another application can be a so-called voltage regulated module (VRM) behind the standard computer power supply or Silver Box to deliver a stable processor voltage even under high load variations.

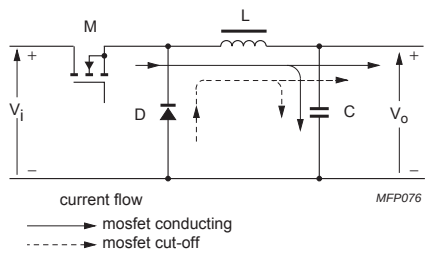

Fig.12 Circuit diagram of a buck or down converter.

BOOST OR UP CONVERTER

Re-arranging the circuit components of the buck converter results in the boost or up converter of Fig.13. It adapts the DC input voltage to a higher output level. When the mosfet is on, the inductor voltage is equal to the input voltage and the linearly rising current stores energy in the inductor. Switching off the mosfet stops the storage of energy and the inductor voltage reverses. The output voltage becomes the sum of the input and inductor voltage and a decreasing inductor current will be forced to flow to the output via the diode.

Typical boost converter applications can be found in battery operated equipment, e.g. a laptop where higher internal voltages are needed than supplied by the battery. In order to meet the stringent requirements on EMC, boost converters can also be used as power factor correction (PFC) circuits in between the mains and a SMPS. A PFC circuit ensures that a sinusoidal voltage and current are drawn from the mains, which is not possible with a SMPS only.

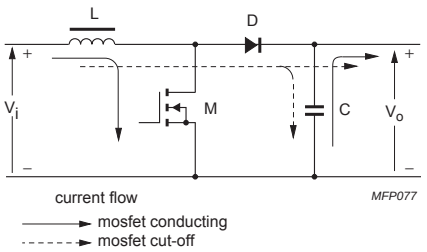

Fig.13 Circuit diagram of a boost or up converter

FLYBACK CONVERTER

One of the major drawbacks of both buck and boost converter is the absence of galvanic isolation between in- and output, which can be required by some applications. Introducing a magnetically coupled coil, like in the flyback converter of Fig.14, solves this point. But the big advantage of the flyback converter is that the output voltage can be higher or lower than the input voltage, depending on the turns ratio N. More secondary windings result in more output voltages. During the on-time of the mosfet, a linearly rising current is flowing through the primary winding and energy will be stored in the coupled coil. By the end of the on-time the primary voltage reverses and the stored energy introduces, via the magnetic coupling, a linearly decreasing current in the secondary winding. The dots close to the primary and secondary windings indicate the winding direction, necessary for good operation.

The galvanic isolation between in- and output and the possibility of multiple outputs make the flyback converter one of the most popular SMPS types. Flyback converters can be found in many applications from small low power stand-by supplies of less than 1 W to big power supplies delivering over a few kWs.

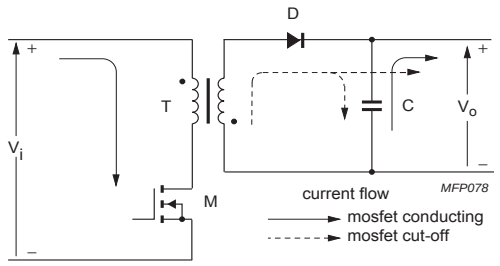

Fig.14 Circuit diagram of a flyback converter

FORWARD CONVERTER

The forward converter of Fig.15 is basically a buck converter with galvanic isolation realized by the transformer. With the turns ratio, the output voltage can be made higher or lower than the input voltage. When the mosfet is on, current is flowing through both the primary and secondary winding of the transformer and it will be magnetized. The secondary current stores energy in the coil. Switching off the mosfet releases the energy and a decreasing current is flowing to the output.
De-magnetizing of the transformer is achieved by a third winding having an equal number of turns but opposite winding direction. With it's higher component count, the forward converter is less attractive than the flyback converter.

A push-pull converter is an arrangement of two forward converters operating in antiphase (push-pull action). A push-pull converter circuit doubles the frequency of the ripple current in the output filter and, therefore, reduces the output ripple voltage. A further advantage of the push-pull operation is that the transformer core is excited alternately in both directions in contrast to both the forward and

flyback converters. Therefore, for the same operating conditions and power throughput, a push-pull converter design can use a smaller transformer core.

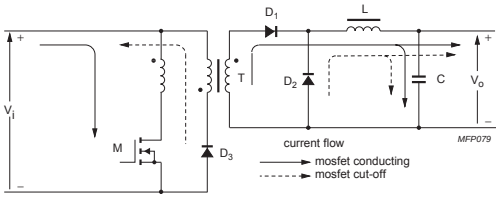

Fig.15 Circuit diagram of a forward converter.

HALF AND FULL BRIDGE CONVERTER

With the half bridge converter of Fig.16, one side of the primary winding is at a voltage potential equal to half the supply voltage. Switching the mosfets puts the other side alternately to the supply voltage and ground and therefore the primary voltage is half the supply voltage. However, with the full bridge converter, see Fig.17, and using the same transformer, the primary voltage is equal to the supply voltage. This makes the full bridge converter more efficient, but the control of two pairs of mosfets is more complicated. Transformer de-magnetizing is in both converters realized by the body diodes of the mosfets. For example, magnetizing of the transformer core is done with M1, while the de-magnetizing is done by the body diode of M2. An advantage of this principle is that M2 can be switched on during the de-magnetizing process and no switch-on losses (the so-called zero voltage switching ZVS principle) occur and less EMI is generated.

The advantage of the bridge converters compared to the previous ones (except the push-pull converter) is that the transformer is excited in two directions and therefore the full BH loop from -Bsat to +Bsat can be used. For equal throughput power, the transformer of a bridge converter can be smaller than e.g. the transformer of a forward converter operating on the same frequency.

With a secondary circuit identical to that of a forward converter, the DC-AC converter is transformed into a DC-DC converter. Still, the operating frequency of the energy storage inductor is twice the control frequency and the ripple current has been halved. Therefore, the core volume of the inductor can also be smaller.

Half and full bridge converters are normally the basis for resonant converters. In these converters, the primary inductance is a part of a resonant tank made with one or more capacitors and/or inductors. Although the resonant tank has a squarewave input voltage, sinusoidal voltages and currents appear in the tank. This means that no harmonics are introduced and in combination with the ZVS of the mosfets, it makes resonant converters very attractive for high frequency designs. Note that resonant converters directly deliver their energy to the load and no energy storage inductor is necessary.

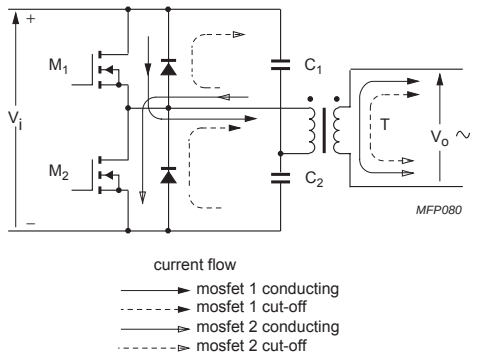

Fig.16 Circuit diagram of a half bridge converter.

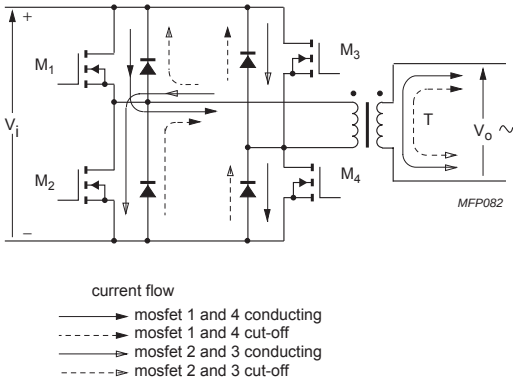

Fig.17 Circuit diagram of a full bridge converter.

Ferrite selection

Dependent on the converter type, the ferrites used in these converters operate under saturation or loss limited conditions, which require special power ferrites with high saturation and low loss levels even at elevated operation temperatures.

The operating frequency is one of the parameters defining which core material can be used in an application. For

those SMPSs which are connected directly to a high input voltage (e.g. the rectified mains can be up to 400 V in some parts of the world), semiconductors with a high breakdown voltage are needed. A high breakdown voltage limits the switching frequency otherwise severe switching losses inside the semiconductor occur (on the other hand, a low voltage device can be used at much higher operating frequencies). For flyback converters things are even worse. When the mosfet is switched off, it's drain-source voltage is the sum of input and rectified secondary voltage. Therefore the operating frequency of a high voltage input SMPS is limited by the capabilities of the used semiconductors and switching frequencies up to 300 kHz can be found nowadays even when the semiconductors are connected to a heatsink. This means that most power ferrites of the 3Cxx series will mainly be used under saturation limited conditions, see also the performance factor graph in Fig.19. On top, for many applications the operating frequency is only a few tens of kHz due to EMC regulations. The reason is that these requirements can relatively easily be met in the frequency area below 150 kHz.

Converters which are not directly connected to a high input voltage and/or soft-switching power supplies, like half and full bridge (resonant) converters can overcome this problem and operating frequencies into the MHz range can be found. Power ferrites for this range are gathered in the 3Fxx series and 4F1.

The energy storage inductor of all converters (except flyback and resonant) normally operates at a bias level, therefore ferrites with a high saturation value at the application temperature, like 3C92, result in the smallest core volumes.

In case of post regulators, the operating frequency can be chosen much higher as the input voltage is much lower and the generated EMI will be sufficiently attenuated by the SMPS in front of the post regulator. Now ferrites from the 3Fxx series and 4F1 are the best choice.

All the inductors, including the coupled inductor of the flyback converter, need an air gap necessary for the energy storage, while the transformers can be made without gap.

Core selection

Operating frequency

The preferred operating frequency of a Switched Mode Power Supply is greater than 20 kHz to avoid audible noise from the transformer. With modern power ferrites the practical upper limit has shifted to well over 1 MHz.

Ambient temperature

Ambient temperature, together with the maximum core temperature, determines the maximum temperature rise, which in turn fixes the permissible total power dissipation in the transformer. Normally, a maximum ambient temperature of 60 °C has been assumed. This allows a 40 °C temperature rise from the ambient to the centre of the transformer for a maximum core temperature of 100 °C. There is a tendency however towards higher temperatures to increase power throughput densities. Our new material 3C93 meets these increased temperature requirements with a loss minimum around 140 °C

Flux density

To avoid saturation in the cores the flux density in the minimum cross-section must not exceed the saturation flux density of the material at 100 °C. The allowable total flux is the product of this flux density and the minimum core area and must not be exceeded even under transient conditions, that is, when a load is suddenly applied at the power supply output, and maximum duty factor occurs together with maximum supply voltage. Under steady-state conditions, where maximum duty factor occurs with minimum supply voltage, the flux is reduced from its absolute maximum permissible value by the ratio of the minimum to maximum supply voltage (at all higher supply voltages the voltage control loop reduces the duty factor and keeps the steady-state flux constant).

The minimum to maximum supply voltage ratio is normally taken as 1 : 1.72 for most applications.

SELECTING THE CORRECT CORE TYPE

The choice of a core type for a specific design depends on the design considerations and also on the personal preference of the designer. Table 1 gives an overview of core types as a function of power throughput and this may be useful to the designer for an initial selection.

Each of the core types has been developed for a specific application, therefore they all have advantages and drawbacks depending on, for example, converter type and winding technique.

Table 1 Power throughput for different core types at 100 kHz switching frequency

POWER RANGE (W)	CORE TYPE
< 5	RM4; P11/7; T14; EF13; U10
5 to 10	RM5; P14/8
10 to 20	RM6; E20; P18/11; T23; U15; EFD15
20 to 50	RM8; P22/13; U20; RM10; ETD29; E25; T26/10; EFD20
50 to 100	ETD29; ETD34; EC35; EC41; RM12; P30/19; T26/20; EFD25
100 to 200	ETD34; ETD39; ETD44; EC41; EC52; RM14; P36/22; E30; T58; U25; U30; E42; EFD30
200 to 500	ETD44; ETD49; E55; EC52; E42; P42/29; U67
> 500	E65; EC70; U93; U100; P66/56; PM87; PM114; T140

Choice of ferrite for power transformers and inductors

A complete range of power ferrites is available for any application.

3C30

Low frequency (< 200 kHz) material with improved saturation level. Suitable for flyback converters e.g. Line Output Transformers.

3C34

Medium frequency (< 300 kHz) material with improved saturation level. Suitable for flyback converters e.g. Line Output Transformers.

3C81

Low frequency (< 100 kHz) material with loss minimum around 60 °C.

3C90

Low frequency (< 200 kHz) material for industrial use.

3C91

Medium frequency (< 300 kHz) material with loss minimum around 60 °C.

3C92

Low frequency (< 200 kHz) material with a very high saturation level. Specially recommended for inductors and output chokes.

3C93

Medium frequency (< 300 kHz) material with loss minimum around 140 °C.

3C94

Medium frequency material (< 300 kHz).
Low losses, especially at high flux densities.

3C96

Medium frequency (< 400 kHz) material. Very low losses, especially at high flux densities.

3F3

High frequency material (up to 700 kHz).

3F35

High frequency material (up to 1 MHz).
Very low losses, around 500 kHz.

3F4

High frequency material (up to 2 MHz).
Specially recommended for resonant supplies.

3F45

High frequency material (up to 2 MHz).
Specially recommended for resonant supplies.

3F5

High frequency material (up to 4 MHz).
Specially recommended for resonant supplies.

4F1

High frequency material (up to 10 MHz).
Specially recommended for resonant supplies.

Performance factor of power ferrites

The performance factor ($f \times B_{max}$) is a measure of the power throughput that a ferrite core can handle at a certain loss level . From the graph it is clear that for low frequencies there is not much difference between the materials, because the cores are saturation limited. At higher frequencies, the differences increase. There is an optimum operating frequency for each material. It is evident that in order to increase power throughput or power density a high operating frequency and a better ferrite should be chosen.

OUTPUT CHOKES

Output chokes for Switched Mode Power Supplies have to operate with a DC load causing a bias magnetic field H_{DC}.

In a closed ferrite circuit, this can easily lead to saturation. Power ferrites such as 3C90 or 3F3 start saturating at field strengths of about 50 A/m. Permeability drops sharply, as can be seen in the graphs of the material data section. The choke loses its effectiveness. The new material 3C92 is optimized for use in power inductors. It features a very high saturation level as well as a high Tc, making it the best material for power inductors, especially at elevated temperatures.

There are two remedies against the saturation effect:

- The use of gapped ferrite cores
- The use of a material with low permeability and high saturation, like iron powder 2P.

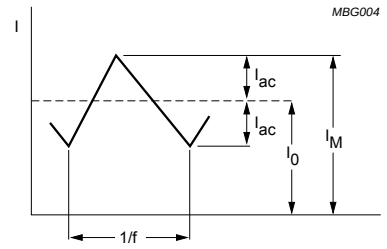

Fig.18 Choke waveform.

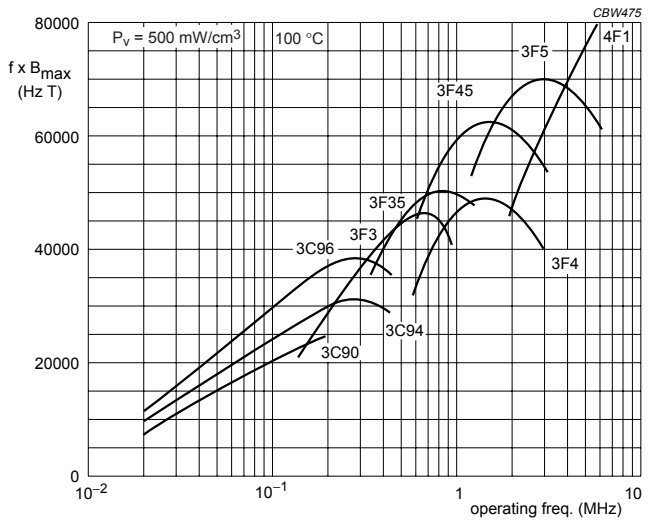

Fig.19 Performance factor ($f \times B_{max}$) at PV = 500 mW/cm^3 as a function of frequency for power ferrite materials.

GAPPED CORE SETS

The effect of an air gap in the circuit is that a much higher field strength is needed to saturate a core.

For each operating condition an optimum air gap length can be found. In a design, the maximum output current (I) and the value of inductance (L) necessary to smooth the ripple to the required level are known.

The product I^2L is a measure of the energy which is stored in the core during one half cycle.

Using this I^2L value and the graphs given on the following pages for most core types, the proper core and air gap can be selected quickly at a glance.

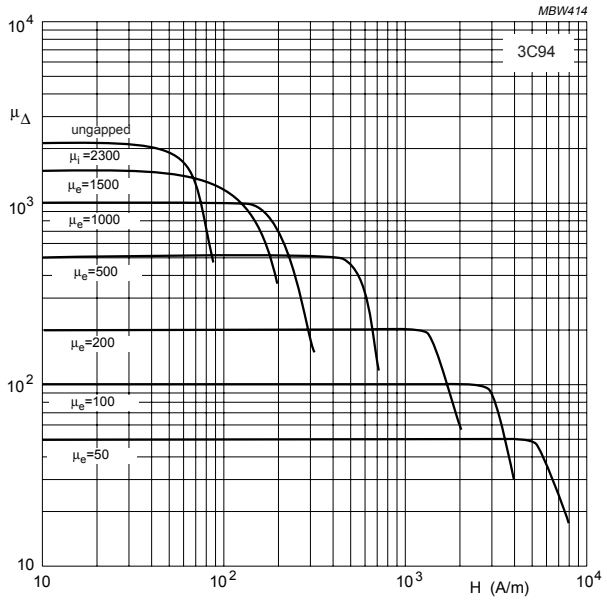

Fig.20 Effect of increased gap length.

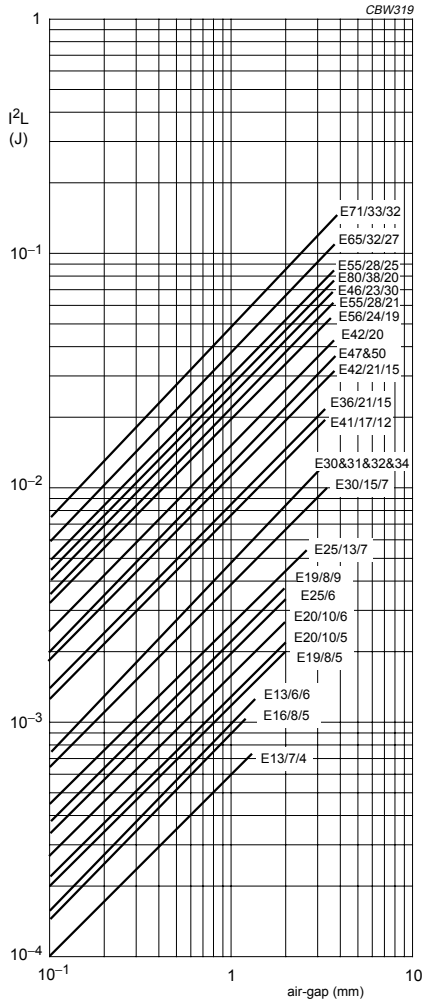

Fig.21 I^2L graph for E cores.

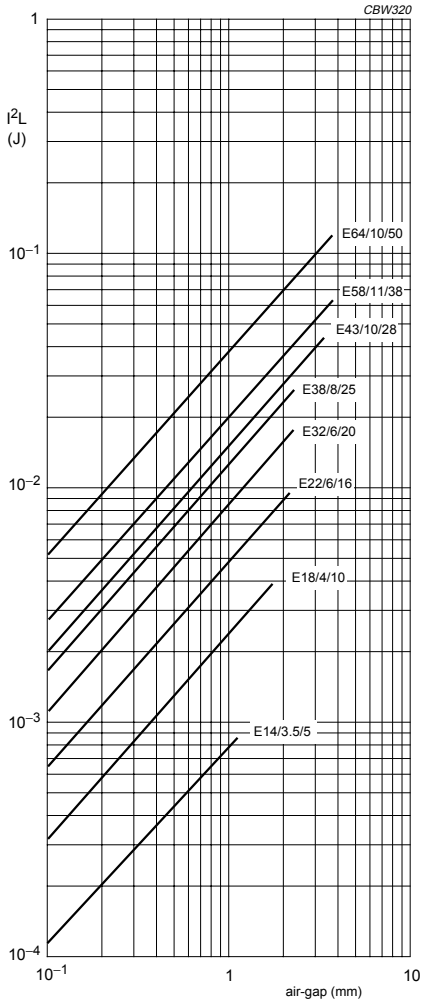

Fig.22 I^2L graph for planar E cores (valid for E + E and E + PLT combinations).

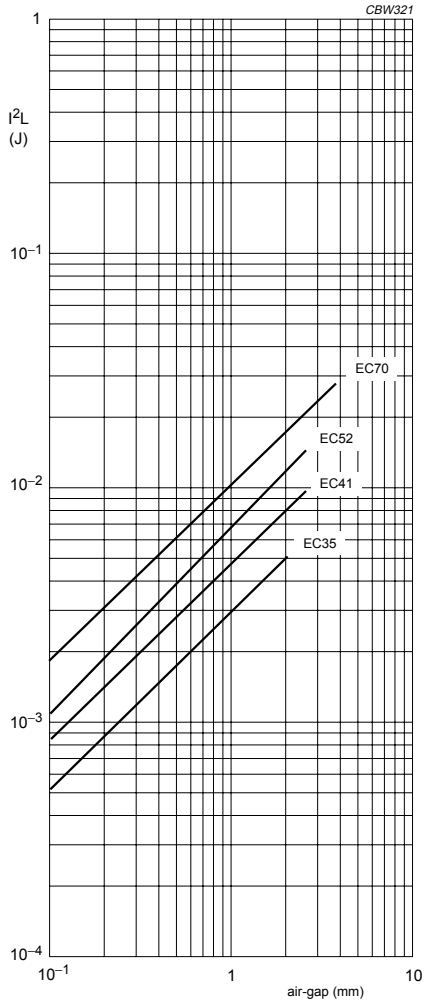

Fig.23 I^2L graph for EC cores.

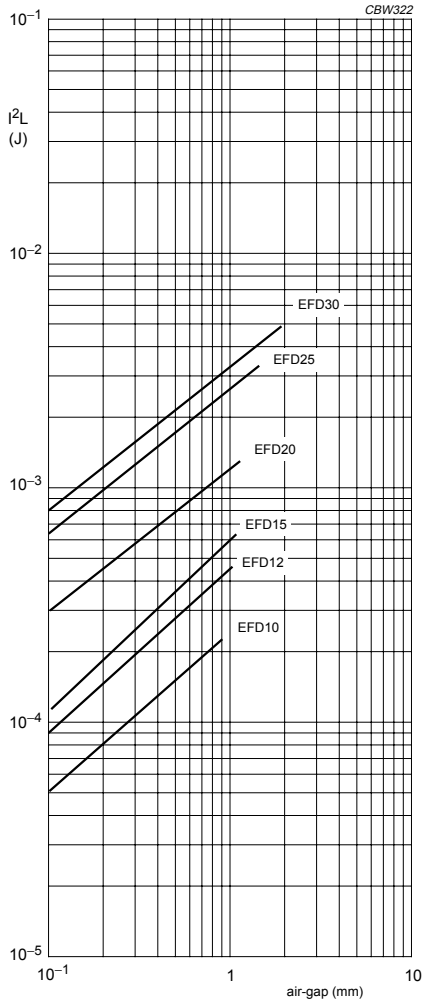

Fig.24 I^2L graph for EFD cores.

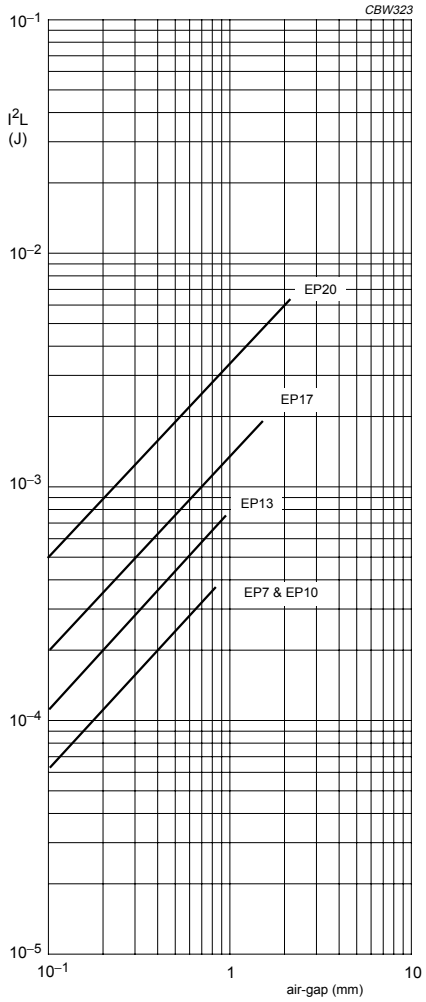

Fig.25 I^2L graph for EP cores.

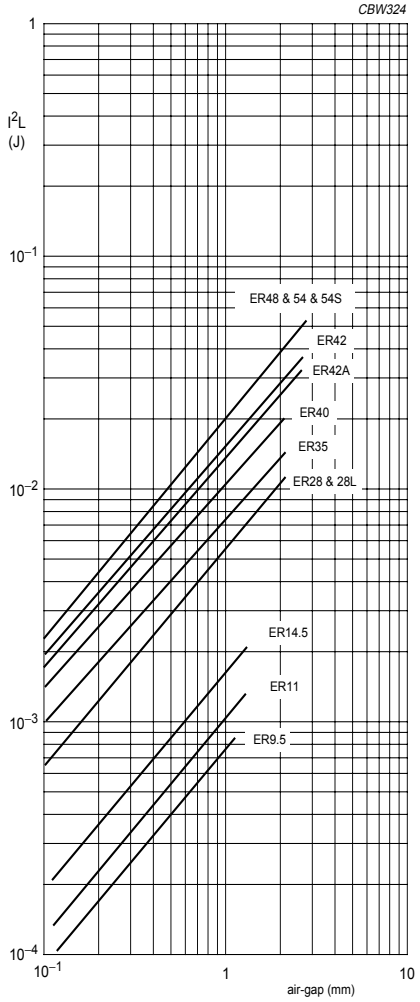

Fig.26 I^2L graph for ER cores.

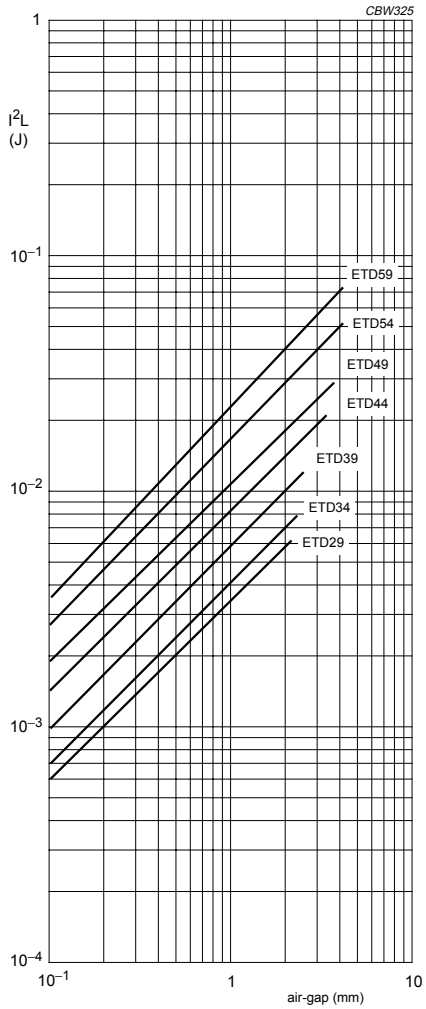

Fig.27 I^2L graph for ETD cores.

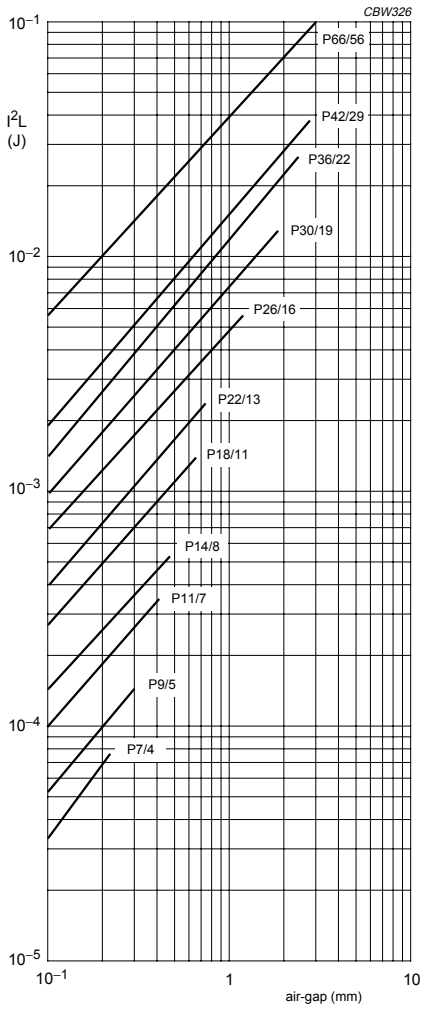

Fig.28 I^2L graph for P cores.

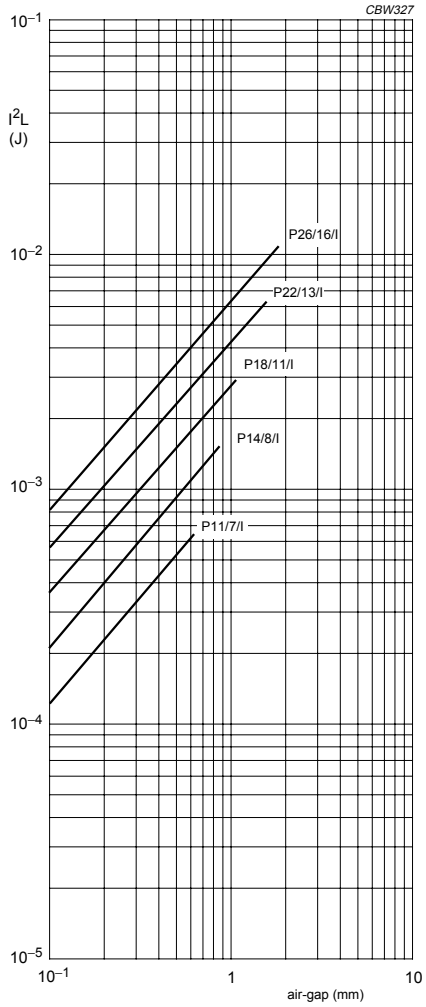

Fig.29 I^2L graph for P/I cores.

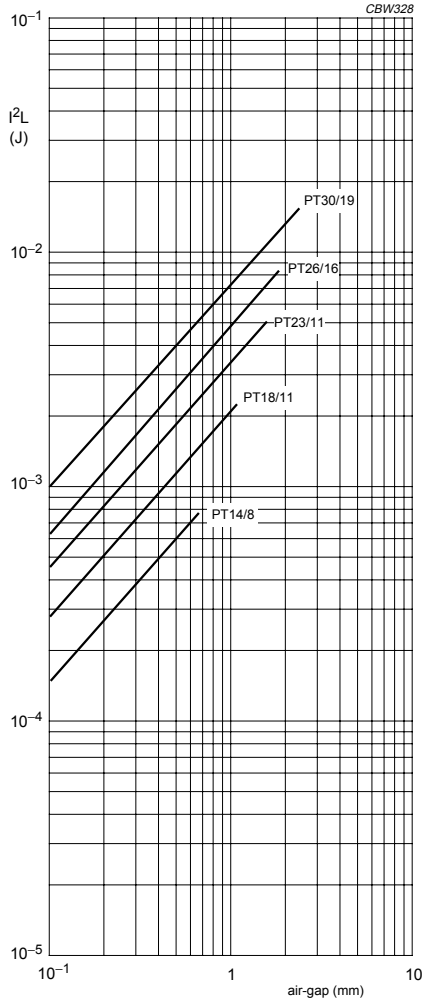

Fig.30 I^2L graph for PT cores.

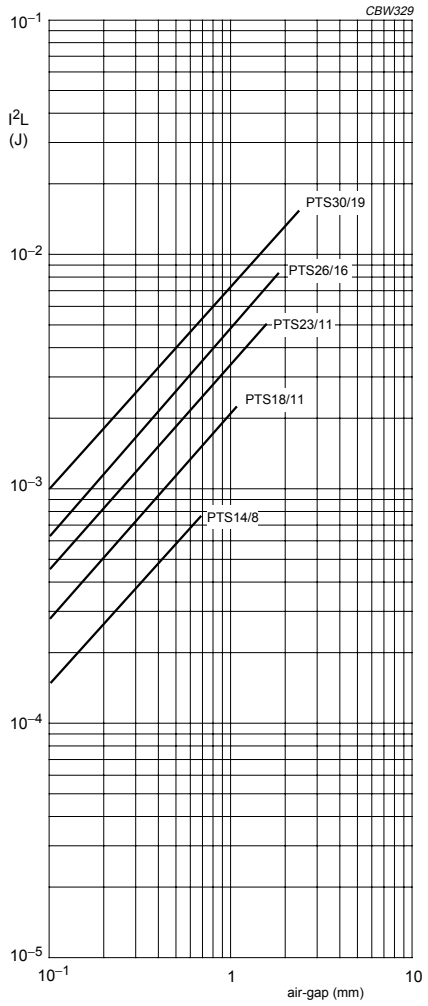

Fig.31 I^2L graph for PTS cores.

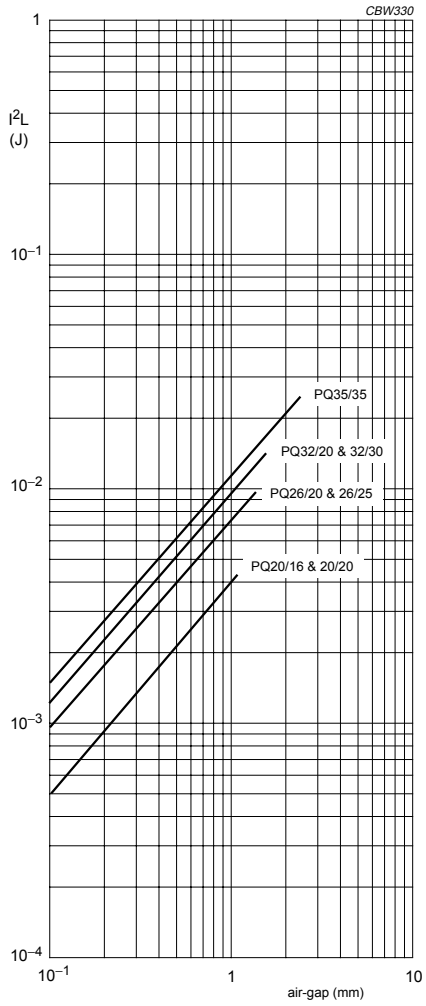

Fig.32 I^2L graph for PQ cores.

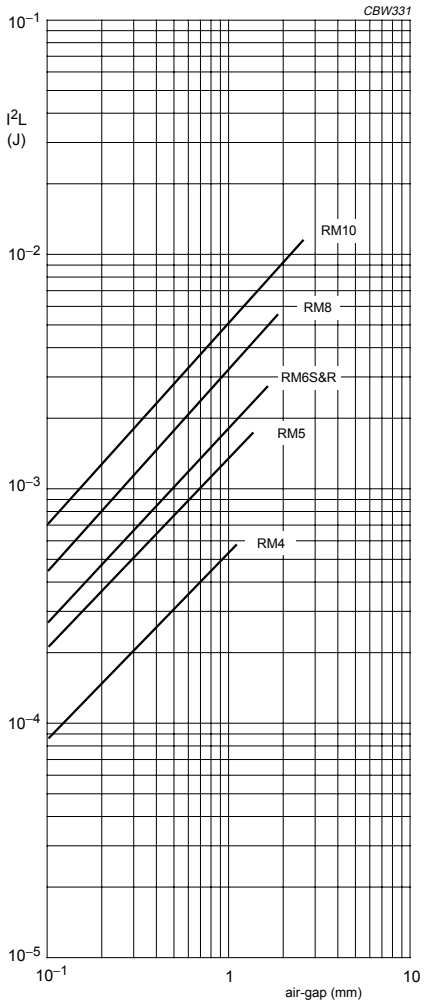

Fig.33 I^2L graph for RM cores.

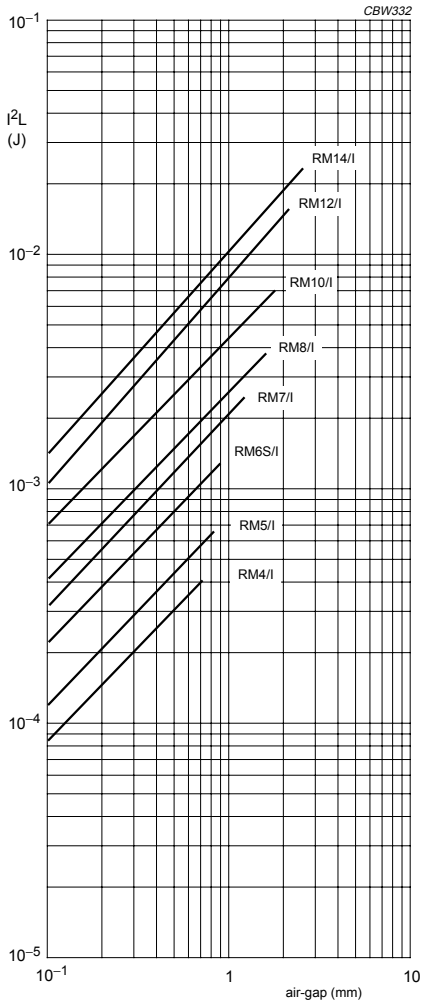

Fig.34 I^2L graph for RM/I cores.

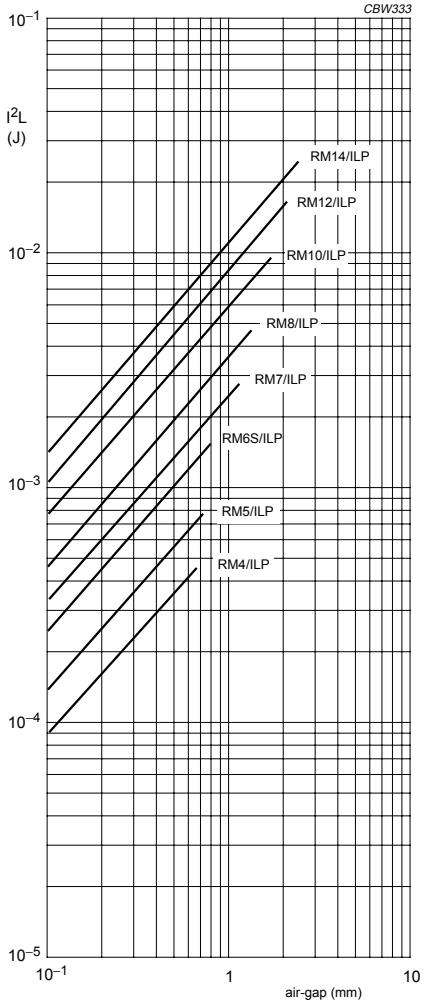

Fig.35 I^2L graph for RM/ILP cores.

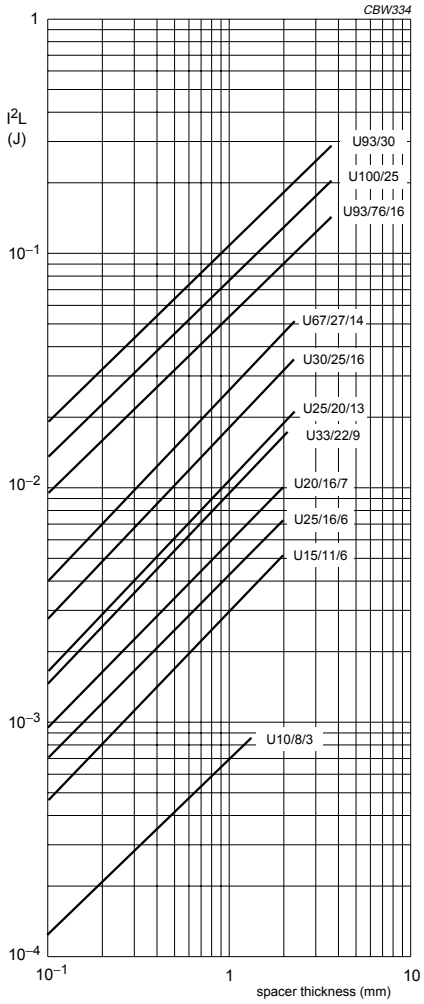

Fig.36 I^2L graph for U cores.

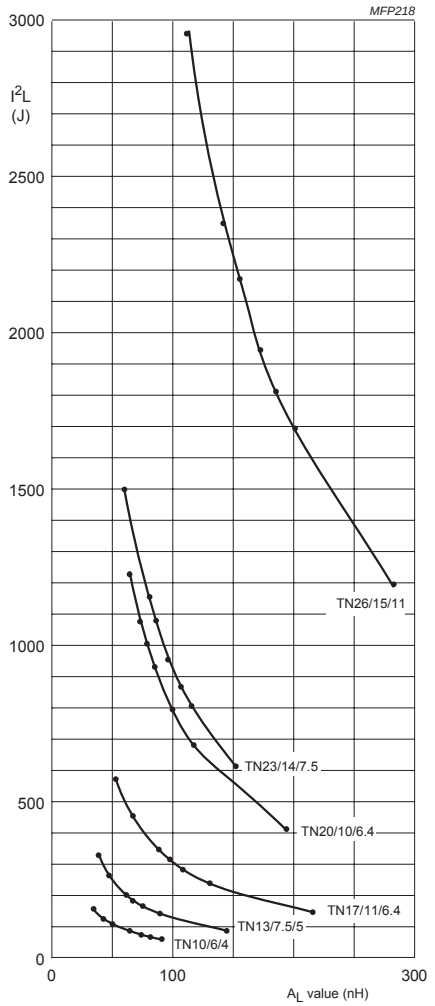

Fig.37 I^2L graph for gapped toroids.

IRON POWDER RING CORES

Ring cores made from compressed iron powder have a rather low permeability (max. 90) combined with a very high saturation level (up to 1500 mT). The permeability is so low because the isolating coating on the iron particles acts as a so called distributed air gap. Therefore, our 2P ring core range can operate under bias fields of up to 2000 A/m.

INPUT FILTERS (COMMON MODE CHOKES)

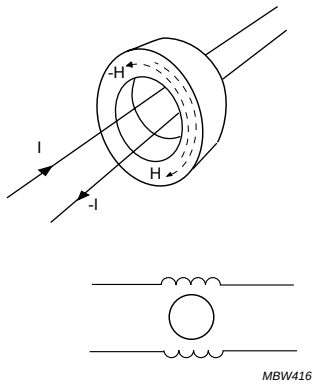

Fig.38 Common mode choke.

To avoid the conduction of switching noise from a SMPS into the mains, an input filter is generally necessary. The magnetic circuit in these filters is usually a pair of U cores or a ring core.

Since the noise signal is mainly common mode, current compensation can be used to avoid saturation.

Two separate windings on the core cause opposing magnetic fields when the load current passes through them (current compensation). The common mode noise signal however, is blocked by the full inductance caused by the high permeability ferrite.

If, for some reason, current compensation is not complete or impossible, high permeability materials will saturate. In that case one of the power materials may be a better compromise. Another important factor in the design process is the frequency range of the interference signal. High permeability ferrites have a limited bandwidth as can be seen from Fig.39.

These materials only perform well as an inductor below the frequency where ferromagnetic resonance occurs. Above this cut-off frequency, a coil will have a highly resistive character and the Q-factor of the LC filter circuit will be limited an thus, also the impedance. A better result could have been obtained with a grade having a lower permeability. Fig.40 provides a quick method of choosing the right ferrite for the job.

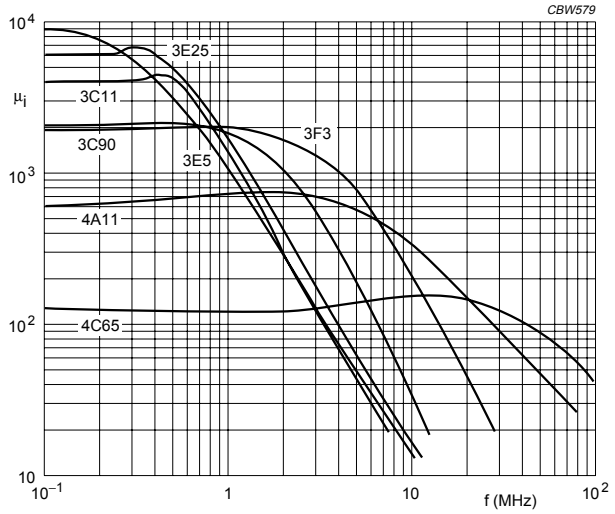

Fig.39 Permeability as a function of frequency of different materials.

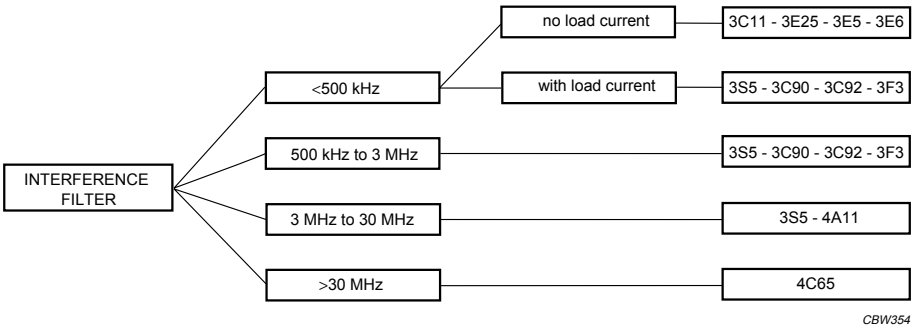

Fig.40 Selection chart for materials used in input filters.

3R1 Toroids in Magnetic regulators

Saturable inductors can be used to regulate several independent outputs of an SMPS by blocking varying amounts of energy from the secondary of the transformer. The rectangular BH loop of our 3R1 ferrite toroids makes them ideal for magnetic regulators with reset control. The circuits required are both simple and economic and can be easily integrated.

Operating principles

When the main switch is ON (t_{on}) the output current (I_{out}) flows through the winding of the saturable inductor to the output inductor and from there to the load.
During OFF time this current falls to zero and so does the magnetic field H. Because the saturable inductor has a rectangular B-H loop, the flux remains at the high level B_r even when the driving field H has fallen to zero.

When no reset current is applied, the flux in the toroid remains at the level of B_r until the next ON time starts. There is only a short delay (t_d) because the flux rises from B_r to B_s. After that, the current rises sharply to its maximum value, limited only by the load impedance. The output voltage has its maximum value, given by:

$$V_{out} = V_t \times \frac{t_{on} - t_d}{T}$$

When V_{out} is higher than V_{ref} a reset current flows during OFF time, regulated by the transistor. This current can only flow through the winding of the saturable inductor. Because this current causes a magnetic field in reverse direction it will move the ferrite away from saturation. Resetting to $-H_c$, for instance, causes some extra delay (t_b) because of the larger flux swing. Full reset causes a flux swing of almost $2 \times B_s$, resulting in a maximum delay ($t_d + t_b$) and the blocking of a major part of the energy flowing from the transformer to the load. The output voltage is regulated to the required level and is given by:

$$V_{out} = V_t \times \frac{t_{on} - t_d - t_b}{T}$$

In this way a reset current in the order of 100 mA can regulate load currents in the order of 10 A or more, depending on the layout of the saturable inductor. For this reason the described circuit is called a magnetic regulator or magnetic amplifier.

The performance of the material 3R1 is comparable to that of amorphous metal making it an excellent choice for application in magnetic regulators. However, since the value of H_c is higher for the ferrite than for most amorphous metal compositions, a simple replacement will often fail to deliver the expected results. A dedicated design or a slight redesign of the regulating circuit is then required, for which we will be glad to give you advice.

Behaviour of the ferrite material in a saturable inductor is shown in Fig.41.

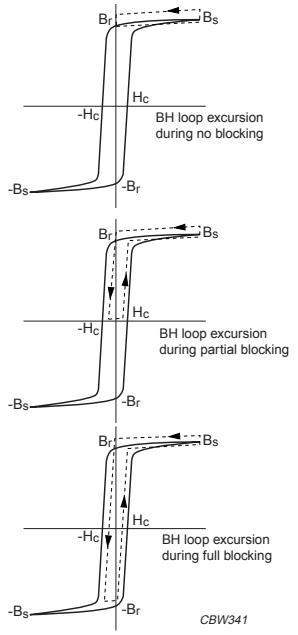

Fig.41 Behaviour of the ferrite material in a saturable inductor.

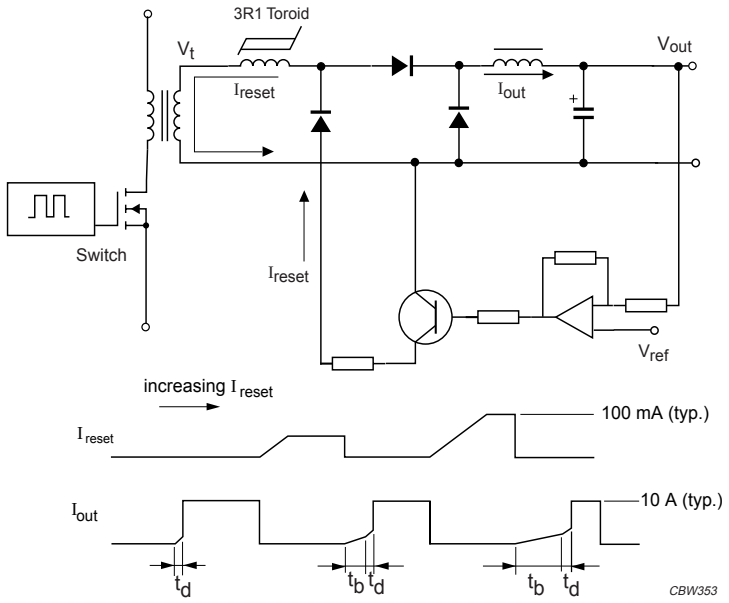

Fig.42 Schematic of a saturable inductor and associated waveforms (with regulation).

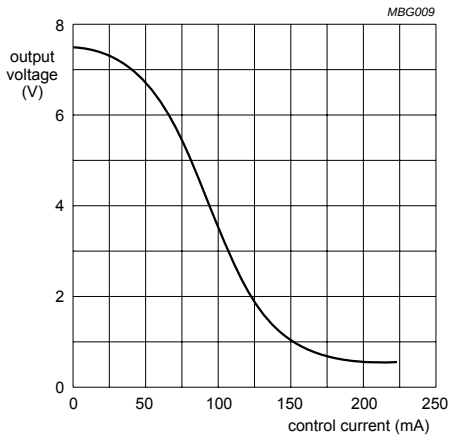

Fig.43 Typical control curve for a 3R1 ring core (size 14 × 9 × 5 mm, with 15 turns).

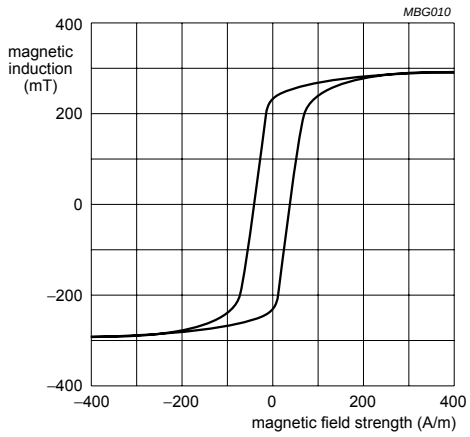

Fig.44 Properties of 3R1 ferrite material; f = 100 kHz, T = 25 °C.

Ferrites for Interference Suppression and Electromagnetic Compatibility (EMC)

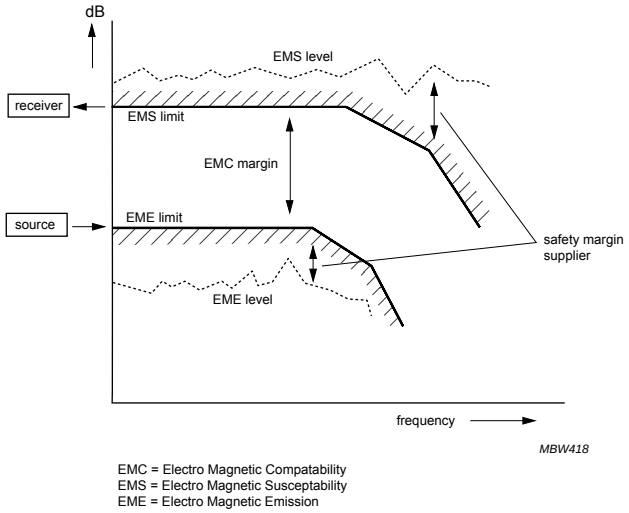

Fig.45 Principles of Electromagnetic Compatibility (EMC).

With the ever increasing intensive use of electronic equipment Electromagnetic Compatibility (EMC) has become an important item. Laws specify limits of the level of interference caused by equipment (EME) and also the sensitivity of equipment to incoming interference (EMS).

Limiting curves are defined by organizations such as EU and FCC. Since the density of equipment increases, laws will become more stringent in the near future.

During the design phase, problems with interference can be avoided to some extent. Often additional suppression components such as capacitors and coils will be necessary to meet the required levels. Inductive components are very effective in blocking interfering signals, especially at high frequencies. The principles of suppression are shown in Fig.46.

Capacitors are used as a shunt impedance for the unwanted signal.

Unfortunately for high frequencies, most capacitors do not have the low impedance one might expect because of parasitic inductance or resistance.

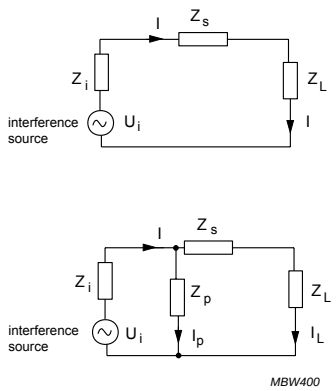

Fig.46 Basic suppression circuits.

Suppressors are used in series with the load impedance. They provide a low impedance for the wanted signal, but a high impedance for the interfering, unwanted, signal.

Ferroxcube have a full range of ring cores, beads, multilayer suppressors and inductors, beads on wire, SMD beads, wideband chokes and cable shields to suit every application. Rods and tubes are also often used for this application after they have been coiled by the user.

SAMPLE BOXES

As the design process in these areas is often based on trial and error, we have assembled several **designers' sample boxes**. Each box is filled with a selection from our standard ranges, which aims at a specific application area. The boxes also contain a booklet with full information about the products and their applications. These sample boxes are:

- Sample box 9: SMD beads and chokes
- Sample box 10: Cable shielding
- Sample box 11: EMI suppression products
- Sample box 12: Multilayer suppressors.
- Sample box 13: Multilayer inductors.

INTERFERENCE SUPPRESSION BEADS

A range of beads is available in two material grades, especially developed for suppression purposes.

They can easily be shifted on existing wires in the equipment:

- 3S1 for frequencies up to 30 MHz
- 3S4 for frequencies from 30 to 1000 MHz
- 4S2 for frequencies from 30 to 1000 MHz.

The materials and beads are fully guaranteed for their main feature, impedance as a function of frequency.

The grade 3S1 has a high permeability and is therefore rather sensitive for DC load. In applications where a high DC current is flowing 3S5 is a better choice, especially at elevated temperatures.

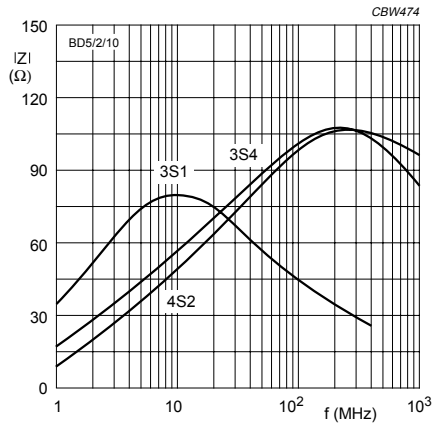

Fig.47 Impedance as a function of frequency for material grades 3S1, 3S4 and 4S2; bead size 5 × 2 × 10 mm.

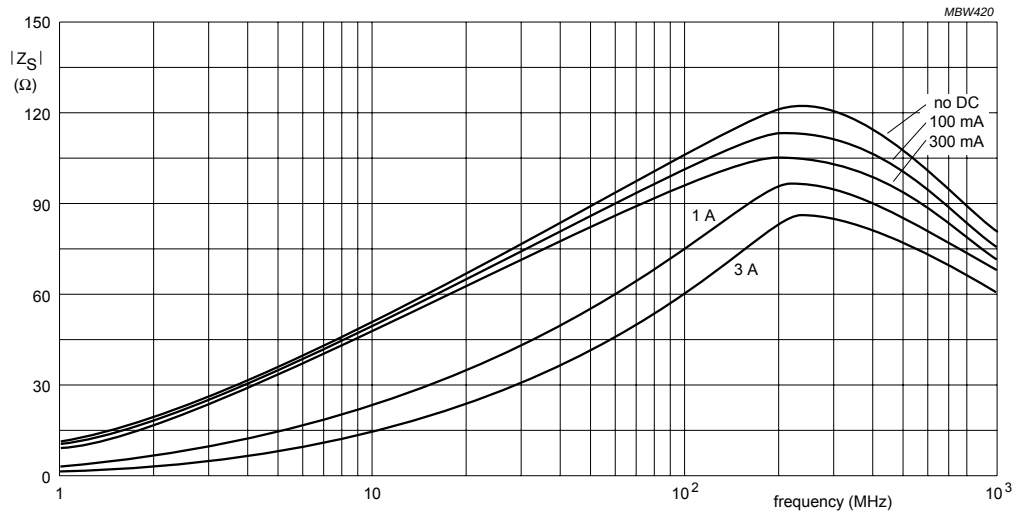

Fig.48 Impedance as a function of frequency at different DC levels for material grade 4S2; bead size 5 × 2 × 10 mm.

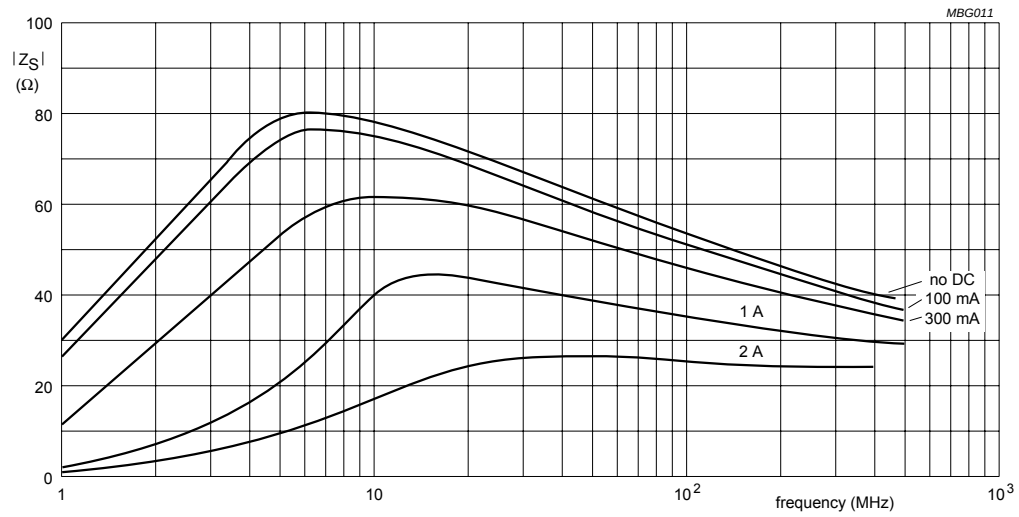

Fig.49 Impedance as a function of frequency at different DC levels for material grade 3S1; bead size 5 × 2 × 10 mm.

BEADS ON WIRE

This product range consists of suppression beads, already mounted on pre-soldered 0.6 mm wire and taped on standard reels. These can be handled by automatic placement machines.

SMD FERRITE BEADS

In response to market demands for smaller, lighter and more integrated electronic devices a series of SMD beads was added to our range. They are available in different sizes and 2 suppression ferrite grades.

Basically these beads consist of a ferrite tube with a rectangular cross-section and a flat tinned copper wire which is bent around the edges and forms the terminals of the component. This design offers many superior mechanical and electrical features.

Some examples of their impedance as a function of frequency and the influence of bias current are given in the graphs.

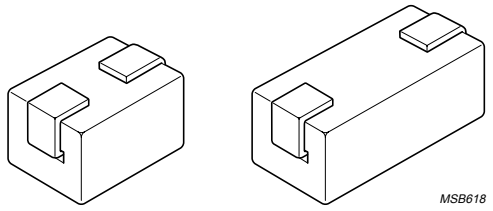

Fig.50 Outline of SMD beads.

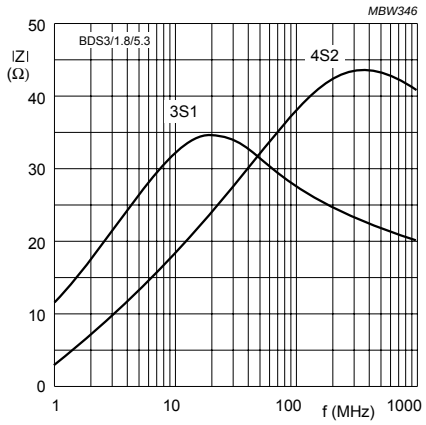

Fig.51 Impedance as a function of frequency for SMD beads.

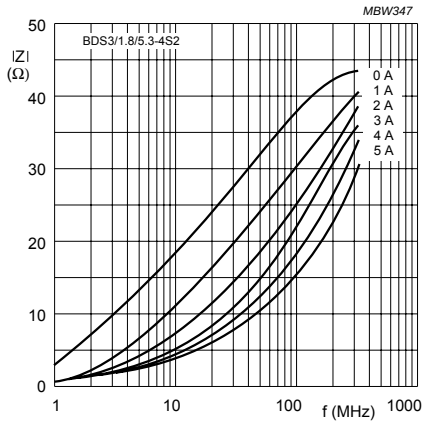

Fig.52 Impedance as a function of frequency for an SMD bead with bias current as a parameter.

SMD FERRITE BEADS FOR COMMON-MODE INTERFERENCE SUPPRESSION

Ferroxcube has a range of soft ferrite SMD beads for common-mode interference suppression.

With standard suppression methods in a signal path, the wanted signal is often suppressed along with the interference, and in many modern applications (EDP for instance) this leads to unacceptable loss of signal.

In Ferroxcube's interference suppression beads, a pair of conductors within a single soft ferrite block are connected along their lengths by an air gap.

Common-mode signals (interference signals passing in the same direction along the input and output channels of a device, an IC for instance) serve to reinforce the magnetic flux around both conductors and are therefore attenuated.

In contrast, the wanted signal passing along the input and output channels serves to cancel the flux around the conductors and therefore passes unattenuated.

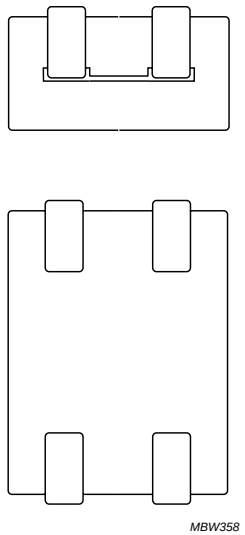

Fig.53 Outline of an SMD common-mode choke.

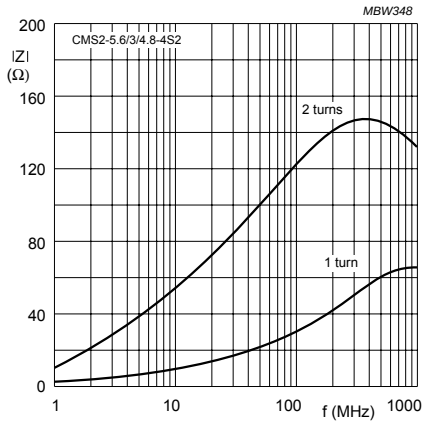

Fig.54 Impedance as a function of frequency of an SMD common mode bead with two conductors.

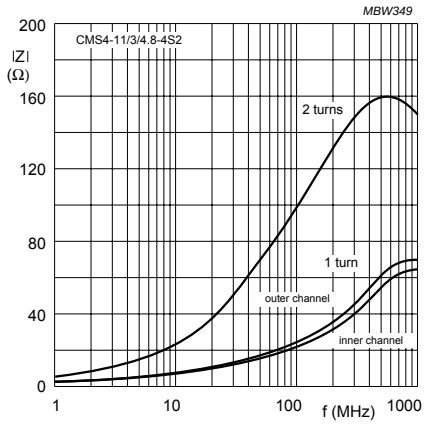

Fig.55 Impedance as a function of frequency of an SMD common mode bead with four conductors.

WIDEBAND CHOKES

Wideband chokes are wired multi-hole beads. Since they have up to 2½ turns of wire their impedance values are rather high over a broad frequency range, hence their name.

The magnetic circuit is closed so there is little stray field. The DC resistance is very low since only a short length of 0.6 mm copper wire is used.

These products already have a long service record and are still popular for various applications.

The basic range has been extended with several types, e.g. with isolation and taped on reel.

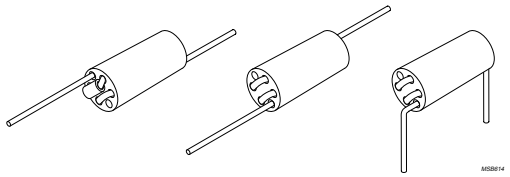

Fig.56 Outline of wideband chokes.

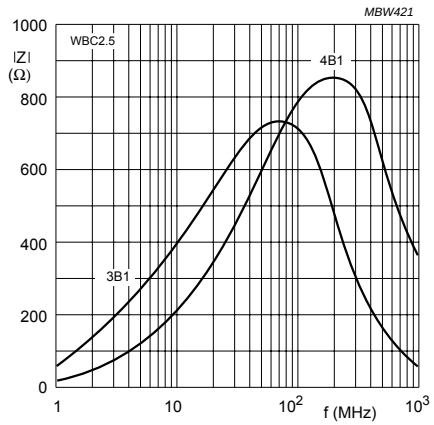

Fig.57 Impedance as a function of frequency for a wideband choke.

SMD WIDEBAND CHOKES

SMD wideband chokes are an alternative to a SMD bead when more impedance or damping is required.

The design of this product is based on our well known range of wideband chokes.

In these products the conductor wire is wound through holes in a multi-hole ferrite core, thus separating them physically and reducing coil capacitance.

The result is a high impedance over a wide frequency range, a welcome feature for many interference problems.

The present SMD design preserves the excellent properties and reliability of the original wideband chokes by keeping the number of electrical interfaces to an absolute minimum.

A plated version is available to increase the soldering surface. The metallization does not extend to the edge of the core to allow for side-to-side mounting.

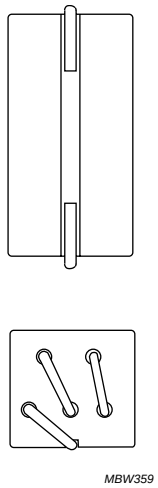

Fig.59 Outline of an SMD wideband choke.

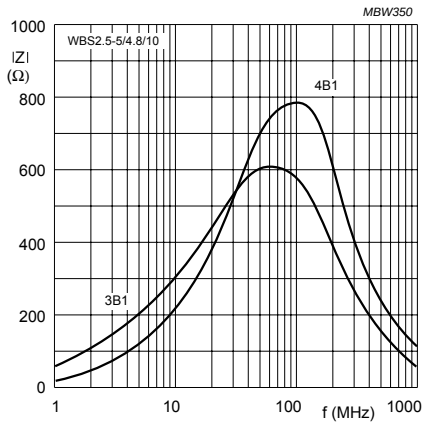

Fig.60 Impedance as a function of frequency for SMD wideband chokes.

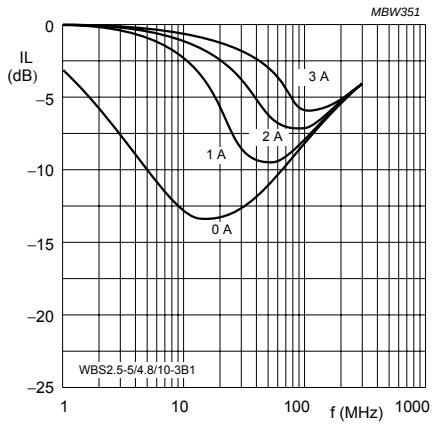

Fig.61 Insertion loss of a 3B1 SMD wideband choke as a function of frequency (50 Ω circuit).

CABLE SHIELDS

Also in our range are so-called cable shields. These products are an effective remedy against common-mode interference on coaxial or flat cables. They come in several shapes: round tubes, rectangular sleeves and split sleeves to mount on existing cable connections.

Our suppression material 3S4 is very suitable for this application. It combines a high permeability (1700) for high impedance in the lower frequency range with an excellent high frequency behaviour for true wideband suppression.

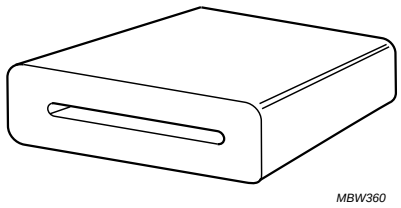

Fig.62 Outline of a cable shield.

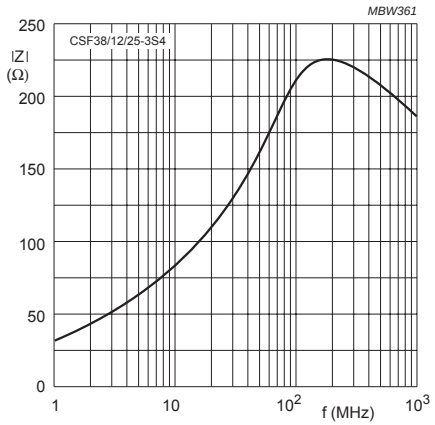

Fig.63 Impedance of a cable shield as a function of frequency.

RODS AND TUBES

Rods and tubes are generally used to increase the inductance of a coil. The magnetic circuit is very open and therefore the mechanical dimensions have more influence on the inductance than the ferrite's permeability (see Fig.64) unless the rod is very slender.

In order to establish the effect of a rod on the inductance of a coil, the following procedure should be carried out:

- Calculate the length to diameter ratio of the rod (l/d)
- Find this value on the horizontal axis and draw a vertical line.

The intersection of this line with the curve of the material permeability gives the effective rod permeability.

The inductance of the coil, provided the winding covers the whole length of the rod is given by:

$$L = \mu_0 \mu_{rod} \frac{N^2 A}{l} (H)$$

where:

N = number of turns

A = cross sectional area of rod

l = length of coil.

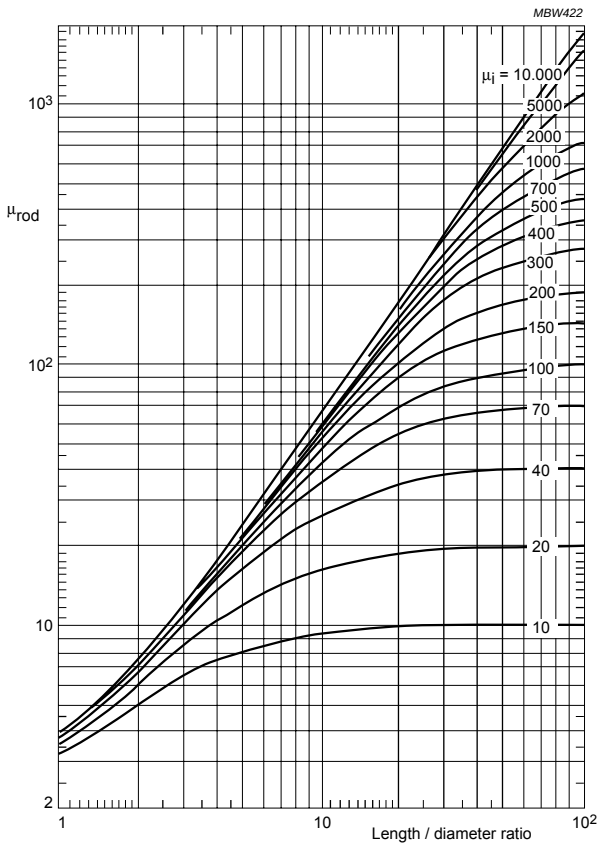

Fig.64 Rod permeability (μ_{rod}) as a function of length to diameter ratio with material permeability as a parameter.

Literature and reference materials

FERROXCUBE APPLICATION LITERATURE

For the latest application literature, refer to the website at: **www.ferroxcube.com**

IEC STANDARDS ON SOFT FERRITES

60050-221	International Electrotechnical Vocabulary (IEV) - Chapter 221 : Magnetic materials and components - General terms
60133	Dimensions for pot cores made of magnetic oxides and associated parts (replaced by 62317-2)
60205	Calculation of the effective parameters of magnetic piece parts
60367	Cores for inductors and transformers for telecommunications (replaced by 62044)
60401	Terms and nomenclature for cores made of magnetically soft ferrites
60401-1	Part 1 : Terms used for physical irregularities
60401-2	Part 2 : Reference of dimensions
60401-3	Part 3 : Guidelines on the format of data appearing in manufacturers' catalogues of transformer and inductor cores
60424-1	Ferrite cores - Guide on the limits of surface irregularities - Part 1 : General specification
60431	Dimensions of square cores (RM cores) made of magnetic oxides and associated parts (replaced by 62317-4)
60647	Dimensions for magnetic oxide cores intended for use in power supplies (EC cores) (replaced by 62317-11)
61185	Magnetic oxide cores (ETD cores) intended for use in power supply applications - Dimensions (replaced by 62317-6)
61246	Magnetic oxide cores (E cores) of rectangular cross-section and associated parts - Dimensions (replaced by 62317-8)
61247	PM cores made of magnetic oxides and associated parts - Dimensions (replaced by 62317-10)
61332	Soft ferrite material classification
61596	Magnetic oxide EP cores and associated parts for use in inductors and transformers - Dimensions (replaced by 62317-5)
61604	Dimensions of uncoated ring cores of magnetic oxides (replaced by 62317-12)
61631	Test method for the mechanical strength of cores made of magnetic oxides
61760-1	Surface mounting technology - Part 1 : Standard method for the specification of surface mounting components (SMDs)
61860	Dimensions of low-profile cores made of magnetic oxides (replaced by 62313)
62024-1	High frequency inductive components - Electrical characteristics and measuring methods - Part 1 : Nanohenry range chip inductor
62025-1	High frequency inductive components - Non-electrical characteristics and measuring methods - Part 1 : Fixed surface mount inductors for use in electronic and telecommunication equipment
62044	Cores made of soft magnetic materials - Measuring methods
62044-1	Part 1 : Generic specification
62044-2	Part 2 : Magnetic properties at low excitation level
62044-3	Part 3 : Magnetic properties at high excitation level
62211	Inductive components - Reliability management
62313	Ferrite cores - Shapes and dimensions for planar magnetics applications (replaced by 62317-9)

Literature and reference materials

62317	Ferrite cores - Dimensions
62317-1	Part 1 : General specification
62317-2	Part 2 : Pot cores
62317-3	Part 3: Half pot cores
62317-4	Part 4: RM cores
62317-5	Part 5: EP cores
62317-6	Part 6: ETD cores
62317-7	Part 7: EER cores
62317-8	Part 8: E cores
62317-9	Part 9: Planar cores
62317-10	Part 10: PM cores
62317-11	Part 11: EC cores
62317-12	Part 12 : Uncoated ring cores
62317-13	Part 13 : PQ cores
62317-14	Part 14 : EFD cores
62323	Dimensions of half pot cores made of ferrite for inductive proximity switches (replaced by 62317-3)
62333	Noise suppression sheet for digital devices and equipment
62333-1	Part 1 : Definitions and general properties
62333-2	Part 2 : Measuring methods
62358	Ferrite cores - Standard inductance factor (AL) and its tolerance
62398	Technology approval schedule for ferrite cores (IECQ / CECC QC210018)

RELATED IEC STANDARDS

60068	Environmental testing
60068-2-20	Test T : Soldering
60068-2-58	Test Td : Test methods for solderability, resistance to dissolution of metallization and to soldering heat of surface mounting devices (SMD)
60085	Method for determining the thermal classification of electrical insulation
60286	Packaging of components for automatic handling
60286-1	Part 1 : Tape packaging of components with axial leads on continuous tapes
60286-2	Part 2 : Tape packaging of components with unidirectional leads on continuous tapes
60286-3	Part 3 : Packaging of leadless components on continuous tapes

Literature and reference materials

REFERENCE BOOKS ON MAGNETIC COMPONENT DESIGN

1.	Soft Ferrites, Properties and Applications	2nd Edition, E.C. Snelling, Butterworths Publishing, 80 Montvale Ave., Stoneham, MA 02180 Tel: (617) 928-2500
2.	Ferrites for Inductors and Transformers	C. Snelling & A. Giles, Research Studies Press, distributed by J. Wiley & Sons, 605 Third Ave., New York, NY 10016
3.	Transformer and Inductor Design Handbook	C. McLyman, Marcel Deckker, 207 Madison Ave., New York, NY10016
4.	Magnetic Core Selection for Transformers and Inductors	C. McLyman, Marcel Deckker, 207 Madison Ave., New York, Ny10016
5.	Handbook of Transformer Applications	W. Flanigan, McGraw Hill Publishing Co., 1221 Ave. of Americas, New York, NY 10020
6.	Transformers for Electronic Circuits	N. Grossner, McGraw Hill Publishing Co., 1221 Ave. of Americas, New York NY 10020
7.	Magnetic Components-Design and Applications	S. Smith Van Nostrand Reinhold Co., 135 West 50th St., New York, NY 10020
8.	Design Shortcuts and Procedures for Electronic Power Transformers and Inductors	Ordean Kiltie, O. Kiltie & Co. 2445 Fairfield, Ft. Wayne, IN 46807
9.	Switching and Linear Power Supply, Power Converter Design	A. Pressman, Hayden Book Co. Inc., 50 Essex St., Rochelle Park., NY 07662
10.	High Frequency Switching Power Supplies	G. Chrysiss, McGraw Hill Publishing Co, 1221 Ave. of Americas, NY
11.	Design of Solid State Power Supplies	3rd Edition, E. Hnatek, Van Nostrand Reinhold Co., New York, NW 10020
12.	Power Devices and Their Applications	Edited by: Dr. F. Lee & Dr. D. Chen, VPEC, Vol. III, 1990. Tel: (703) 231-4536
13.	Application of Magnetism	J.K. Watson, John Wiley & Sons, Inc. 605 Third Ave., New York, NY 10016
14.	Applied Electromagnetics	M.A. Plonus, McGraw Hill Publishing Co., 1221 Ave. of Americas, New York, NY 10020
15.	Transmission Line Transformers	J. Sevick, American Radio Relay League, 225 Main Street, Newington, CT 06111

Soft Ferrites

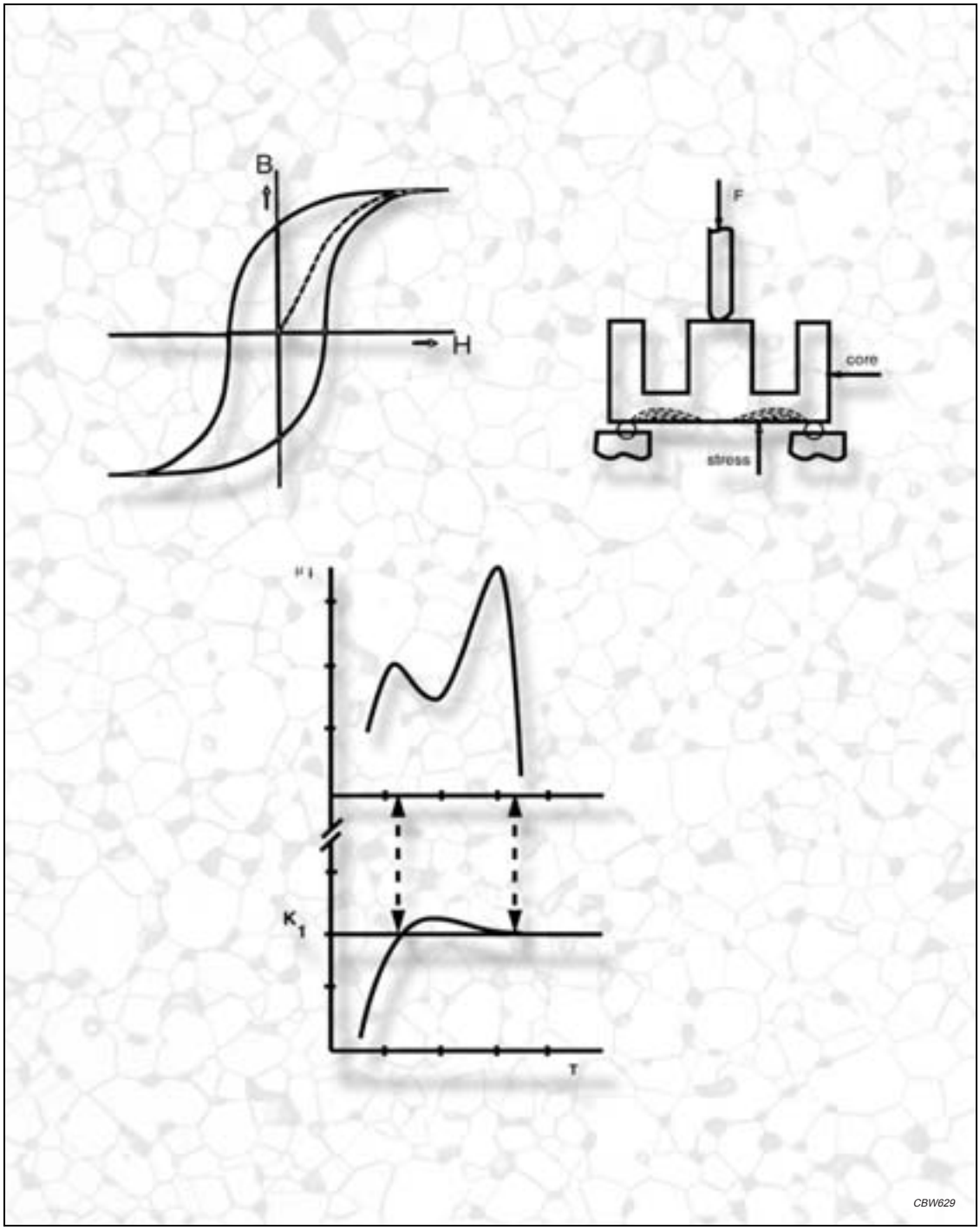
B
H
F
core
stress
K1
T
CBW629

Properties specified in this section are related to room temperature (25 °C) unless otherwise stated.
They have been measured on sintered, non ground ring cores of dimensions ∅25 × ∅15 × 10 mm which are not subjected to external stresses. Products generally comply with the material specification. However, deviations may occur due to shape, size and grinding operations etc. Specified product properties are given in the data sheets or product drawings.

Ferrite material survey

MAIN APPLICATION AREA	FREQUENCY RANGE (MHZ)	MATERIAL	μ_i at 25 °C	B_{sat} (mT) at 25 °C (1200 A/m)	T_C (°C)	ρ (Ωm)	FERRITE TYPE	AVAILABLE CORE SHAPES
Telecom filters Proximity sensors		3B46	3800	≈ 545	≥ 255	≈ 10	MnZn	RM, P, PT, PTS, EP, E, Planar ER, RM/I, RM/ILP, PH
	< 0.1	3B7	2300	≈ 440	≥ 170	≈ 1	MnZn	
	0.2 – 2	3D3	750	≈ 380	≥ 200	≈ 2	MnZn	
	< 0.2	3H3	2000	≈ 360	≥ 160	≈ 2	MnZn	
Wideband signal transformers Pulse transformers Delay lines		3E27	6000	≈ 430	≥ 150	≈ 0.5	MnZn	RM, P, PT, PTS, EP, EP/LP, EPX, E, Planar ER, RM/I, RM/ILP, Toroids
		3E28	4000	≈ 440	≥ 145	≈ 1	MnZn	
		3E5	10000	≈ 380	≥ 125	≈ 0.5	MnZn	
		3E55	10000	≈ 370	≥ 100	≈ 0.1	MnZn	
		3E6	12000	≈ 390	≥ 130	≈ 0.1	MnZn	
		3E7	15000	≈ 390	≥ 130	≈ 0.1	MnZn	Toroids
		3E8	18000	≈ 380	≥ 100	≈ 0.1	MnZn	
		3E9	20000	≈ 380	≥ 100	≈ 0.1	MnZn	
Line output transformers (LOT)	< 0.2	3C30	2100	≈ 500	≥ 240	≈ 2	MnZn	UR
	< 0.3	3C34	2100	≈ 500	≥ 240	≈ 5	MnZn	
Power transformers Power inductors General purpose transformers and inductors	< 0.2	3C81	2700	≈ 450	≥ 210	≈ 1	MnZn	E, EI, Planar E, EC, EFD, EP, ETD, ER, Planar ER, U, RM/I, RM/ILP, P, P/I, PT, PTS, PM, PQ, Toroids (gapped), Bobbin cores
	< 0.2	3C90	2300	≈ 470	≥ 220	≈ 5	MnZn	
	< 0.3	3C91	3000	≈ 470	≥ 220	≈ 5	MnZn	
	< 0.2	3C92	1500	≈ 520	≥ 280	≈ 5	MnZn	
	< 0.3	3C93	1800	≈ 500	≥ 240	≈ 5	MnZn	
	< 0.3	3C94	2300	≈ 470	≥ 220	≈ 5	MnZn	
	< 0.3	3C95	3000	≈ 530	≥ 215	≈ 5	MnZn	
	< 0.4	3C96	2000	≈ 500	≥ 240	≈ 5	MnZn	
	0.2 – 0.5	3F3	2000	≈ 440	≥ 200	≈ 2	MnZn	
	0.5 – 1	3F35	1400	≈ 500	≥ 240	≈ 10	MnZn	
	1 – 2	3F4	900	≈ 410	≥ 220	≈ 10	MnZn	
	1 – 2	3F45	900	≈ 420	≥ 300	≈ 10	MnZn	
	2 – 4	3F5	650	≈ 380	≥ 300	≈ 10	MnZn	
	4 – 10	4F1	80	≈ 320(1)	≥ 260	≈ 10^5	NiZn	
Wideband EMI-suppression Wideband transformers Balun transformers	10 – 100	3B1	900	≈ 380	≥ 150	≈ 0.2	MnZn	BD, BDW, BDS, MLS, CMS, Cable shields, Rods, Toroids, WBS, WBC
	1 – 30	3S1	4000	≈ 400	≥ 125	≈ 1	MnZn	
	30 – 1000	3S3	350	≈ 320	≥ 225	≈ 10^4	MnZn	
	10 – 300	3S4	1700	≈ 320	≥ 110	≈ 10^3	MnZn	
	1 – 30	3S5	3800	≈ 545	≥ 255	≈ 10	MnZn	
	30 – 1000	4A11	850	≈ 340	≥ 125	≈ 10^5	NiZn	
	10 – 300	4A15	1200	≈ 350	≥ 125	≈ 10^5	NiZn	
	10 – 300	4A20	2000	≈ 260	≥ 100	≈ 10^5	NiZn	
	30 – 1000	4B1	250	≈ 360(1)	≥ 250	≈ 10^5	NiZn	
	50 – 1000	4C65	125	≈ 380(1)	≥ 350	≈ 10^5	NiZn	
	30 – 1000	4S2	850	≈ 340	≥ 125	≈ 10^5	NiZn	
	30 – 1000	4S3	250	≈ 360(1)	≥ 250	≈ 10^5	NiZn	

MAIN APPLICATION AREA	FREQUENCY RANGE (MHZ)	MATERIAL	μ_i at 25 °C	B_{sat} (mT) at 25 °C (1200 A/m)	T_C (°C)	ρ (Ωm)	FERRITE TYPE	AVAILABLE CORE SHAPES
EMI-filters Current compensated chokes		3C11	4300	≈ 390	≥ 125	≈ 1	MnZn	Toroids E, EI, U
		3E25	6000	≈ 390	≥ 125	≈ 0.5	MnZn	
		3E26	7000	≈ 430	≥ 155	≈ 0.5	MnZn	
		3E5	10000	≈ 380	≥ 125	≈ 0.5	MnZn	
		3E6	12000	≈ 390	≥ 130	≈ 0.1	MnZn	
		4A11	850	≈ 340	≥ 125	≈ 10^5	NiZn	
HF Tuning	< 1	3B1	900	≈ 380	≥ 150	≈ 0.2	MnZn	Rods, Tubes, Wideband chokes
	< 2	3D3	750	≈ 380	≥ 200	≈ 2	MnZn	
	< 5	4B1	250	≈ 360(1)	≥ 250	≈ 10^5	NiZn	
	< 5	4B2	250	≈ 360(1)	≥ 335	≈ 10^5	NiZn	
	< 20	4C65	125	≈ 380(1)	≥ 350	≈ 10^5	NiZn	
	< 50	4D2	60	≈ 250(2)	≥ 400	≈ 10^5	NiZn	
	< 200	4E1	15	≈ 220(3)	≥ 500	≈ 10^5	NiZn	
magnetic regulators	< 0.2	3R1	800	≈ 410	≥ 230	≈ 10^3	MnZn	Toroids
absorber tiles	< 1000	4S60	2000	≈ 260	≥ 100	≈ 10^5	NiZn	Tiles
scientific particle accelerators	< 10	4B3	300	≈ 420(1)	≥ 250	≈ 10^5	NiZn	Large toroids Machined ferrite products
	< 100	4E2	25	≈ 350(2)	≥ 400	≈ 10^5	NiZn	
	< 10	4M2	140	≈ 310(1)	≥ 200	≈ 10^5	NiZn	
	< 1	8C11	1200	≈ 310	≥ 125	≈ 10^5	NiZn	
	< 10	8C12	900	≈ 260	≥ 125	≈ 10^5	NiZn	

1. At 3000 A/m
2. At 10 kA/m
3. At 20 kA/m

Iron powder material grade survey

IRON POWDER MATERIAL	μ_i at 25 °C	B_{sat} (mT) at 25 °C (3000 A/m)	MAXIMUM OPERATING TEMPERATURE (°C)	MAIN APPLICATION AREA	AVAILABLE CORE SHAPES
2P40	40	950	140	EMI-suppression Output inductors	Toroids
2P50	50	1000	140		
2P65	65	1150	140		
2P80	80	1400	140		
2P90	90	1600	140		

Typical mechanical and thermal properties

PROPERTY	MnZn FERRITE	NiZn FERRITE	UNIT
Young's modules	(90 to 150) × 10^3	(80 to 150) × 10^3	N/mm^2
Ultimate compressive strength	200 to 600	200 to 700	N/mm^2
Ultimate tensile strength	20 to 65	30 to 60	N/mm^2
Vickers hardness	600 to 700	800 to 900	N/mm^2
Linear expansion coefficient	(10 to 12) × 10^{-6}	(7 to 8) × 10^{-6}	K^{-1}
Specific heat	700 to 800	750	$Jkg^{-1} \times K^{-1}$
Heat conductivity	(3.5 to 5.0) × 10^{-3}	(3.5 to 5.0) × 10^{-3}	$Jmm^{-1}s^{-1} \times K^{-1}$

RESISTIVITY

Ferrite is a semiconductor with a DC resistivity in the crystallites of the order of 10^{-3} Ωm for a MnZn type ferrite, and about 30 Ωm for a NiZn ferrite.

Since there is an isolating layer between the crystals, the bulk resistivity is much higher: 0.1 to 10 Ωm for MnZn ferrites and 10^4 to 10^6 Ωm for NiZn and MgZn ferrites.

This resistivity depends on temperature and measuring frequency, which is clearly demonstrated in Tables 1 and 2 which show resistivity as a function of temperature for different materials.

Table 1 Resistivity as a function of temperature of a MnZn-ferrite (3C94)

TEMPERATURE (°C)	RESISTIVITY (Ωm)
−20	≈10
0	≈7
20	≈4
50	≈2
100	≈1

Table 2 Resistivity as a function of temperature of a NiZn-ferrite (4C65)

TEMPERATURE (°C)	RESISTIVITY (Ωm)
0	$\approx 5.10^7$
20	$\approx 10^7$
60	$\approx 10^6$
100	$\approx 10^5$

At higher frequencies the crystal boundaries are more or less short-circuited by heir capacitance and the measured resistivity decreases, as shown in Tables 3 and 4.

Table 3 Resistivity as function of frequency for MnZn ferrites

FREQUENCY (MHz)	RESISTIVITY (Ωm)
0.1	≈2
1	≈0.5
10	≈0.1
100	≈0.01

Table 4 Resistivity as function of frequency for NiZn ferrites

FREQUENCY (MHz)	RESISTIVITY (Ωm)
0.1	$\approx 10^5$
1	$\approx 5.10^4$
10	$\approx 10^4$
100	$\approx 10^3$

PERMITTIVITY

The basic permittivity of all ferrites is of the order of 10. This is valid for MnZn and NiZn materials. The isolating material on the grain boundaries also has a permittivity of approximately 10. However, if the bulk permittivity of a ferrite is measured, very different values of apparent permittivity result. This is caused by the conductivity inside the crystallites. The complicated network of more or less leaky capacitors also shows a strong frequency dependence.

Tables 5 and 6 show the relationship between permittivity and frequency for both MnZn and NiZn ferrites.

Table 5 Permittivity as a function of frequency for MnZn ferrites

FREQUENCY (MHz)	PERMITTIVITY (ε_r)
0.1	$\approx 2.10^5$
1	$\approx 10^5$
10	$\approx 5.10^4$
100	$\approx 10^4$

Table 6 Permittivity as a function of frequency for NiZn ferrites

FREQUENCY (MHz)	PERMITTIVITY (ε_r)
0.001	≈100
0.01	≈50
1	≈25
10	≈15
100	≈12

2P.. SPECIFICATIONS

These iron powder materials are mainly used for low frequency power inductors and output chokes.

Material grade specification - 2P40

SYMBOL	CONDITIONS	VALUE	UNIT
μ_i	25 °C; ≤10 kHz; 0.25 mT	40 ±10%	
$\tan\delta/\mu_i$	25 °C; 100 kHz; 0.25 mT	$\leq 1500 \times 10^{-6}$	
B_r	from 25×10^3 A/m	≈ 250	mT
H_C	from 25×10^3 A/m	≈ 2000	A/m
B	H = 25×10^3 A/m	≈ 950	mT
α_F	25 to 55 °C	$\approx 10 \times 10^{-6}$	K^{-1}
T_{max}		160	°C

Material grade specification - 2P50

SYMBOL	CONDITIONS	VALUE	UNIT
μ_i	25 °C; ≤10 kHz; 0.25 mT	50 ±10%	
$\tan\delta/\mu_i$	25 °C; 100 kHz; 0.25 mT	$\approx 1500 \times 10^{-6}$	
B_r	from 25×10^3 A/m	≈ 300	mT
H_C	from 25×10^3 A/m	≈ 1800	A/m
B	H = 25×10^3 A/m	≈ 1000	mT
α_F	25 to 55 °C	$\approx 20 \times 10^{-6}$	K^{-1}
T_{max}		140	°C

Material grade specification - 2P65

SYMBOL	CONDITIONS	VALUE	UNIT
μ_i	25 °C; ≤10 kHz; 0.25 mT	65 ±10%	
$\tan\delta/\mu_i$	25 °C; 100 kHz; 0.25 mT	$\approx 1000 \times 10^{-6}$	
B_r	from 25×10^3 A/m	≈ 350	mT
H_C	from 25×10^3 A/m	≈ 1500	A/m
B	H = 25×10^3 A/m	≈ 1150	mT
α_F	25 to 55 °C	$\approx 15 \times 10^{-6}$	K^{-1}
T_{max}		140	°C

Material grade specification - 2P80

SYMBOL	CONDITIONS	VALUE	UNIT
μ_i	25 °C; ≤10 kHz; 0.25 mT	80 ±10%	
$\tan\delta/\mu_i$	25 °C; 100 kHz; 0.25 mT	$\approx 1000 \times 10^{-6}$	
B_r	from 25×10^3 A/m	≈ 400	mT
H_C	from 25×10^3 A/m	≈ 1200	A/m
B	H = 25×10^3 A/m	≈ 1400	mT
α_F	25 to 55 °C	$\approx 15 \times 10^{-6}$	K^{-1}
T_{max}		140	°C

Material grade specification - 2P90

SYMBOL	CONDITIONS	VALUE	UNIT
μ_i	25 °C; ≤10 kHz; 0.25 mT	90 ±10%	
$\tan\delta/\mu_i$	25 °C; 100 kHz; 0.25 mT	$\approx 1000 \times 10^{-6}$	
B_r	from 25×10^3 A/m	≈ 450	mT
H_C	from 25×10^3 A/m	≈ 900	A/m
B	H = 25×10^3 A/m	≈ 1600	mT
α_F	25 to 55 °C	$\approx 15 \times 10^{-6}$	K^{-1}
T_{max}		140	°C

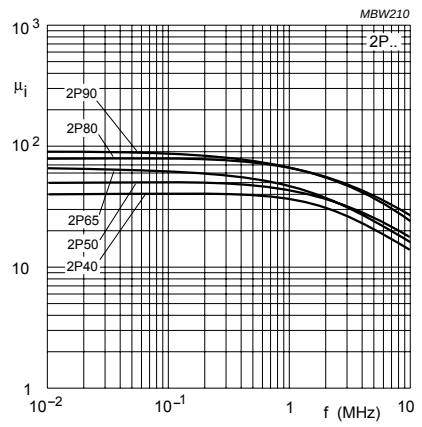

Fig.1 Initial permeability as a function of frequency.

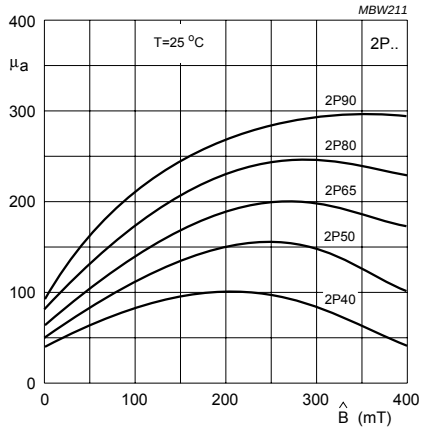

Fig.2 Amplitude permeability as a function of peak flux density.

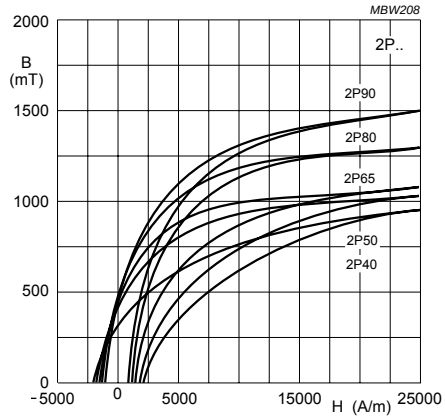

Fig.3 Typical B-H loops.

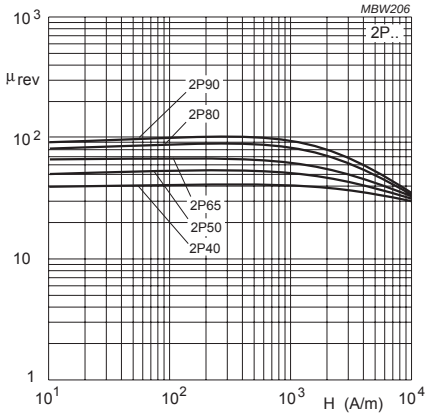

Fig.4 Reversible permeability as a function of magnetic field strength.

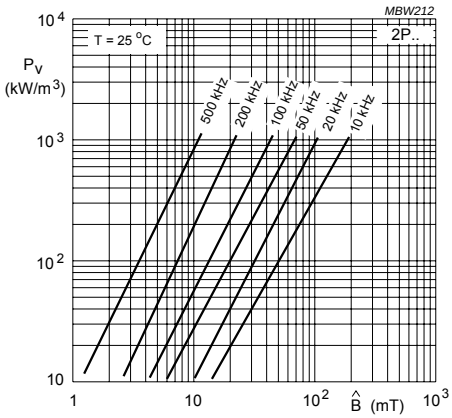

Fig.5 Specific power loss as a function of peak flux density with frequency as a parameter.

SENDUST SPECIFICATIONS

The most economic medium frequency alloy powder material with high saturation flux density and low loss density for use in power inductors and output chokes.

	CONDITIONS	VALUE	UNIT
μ_i	25 °C; ≤10 kHz; 0.25 mT	26 – 125	
T_C		≥ 500	°C
thermal conductivity		0.08	$W.mm^{-1}.K^{-1}$
linear expansion coefficient		10.8×10^{-6}	K^{-1}
density for 125μ		≈ 7000	kg/m^3

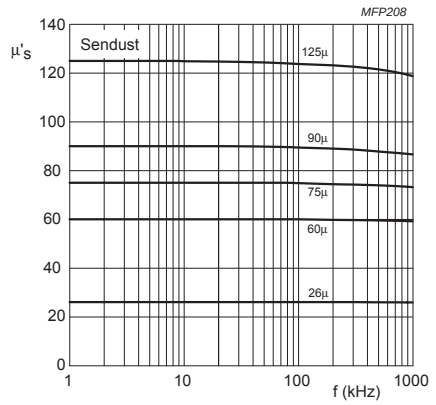

Fig.1 Initial permeability as a function of frequency.

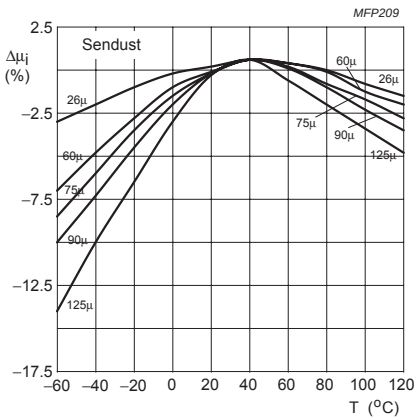

Fig.2 Initial permeability as a function of temperature.

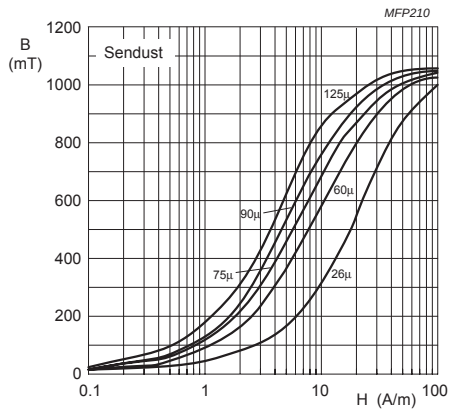

Fig.3 Typical B-H curves.

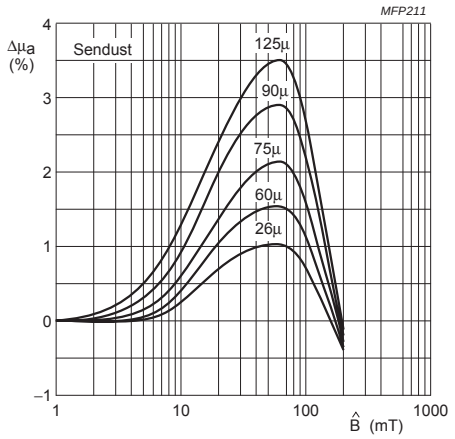

Fig.4 Amplitude permeability as a function of peak flux density.

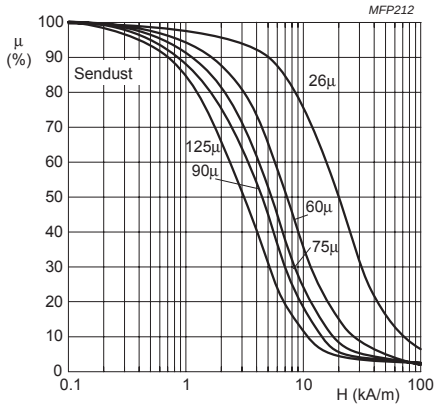

Fig.5 Reversible permeability as a function of magnetic field strength.

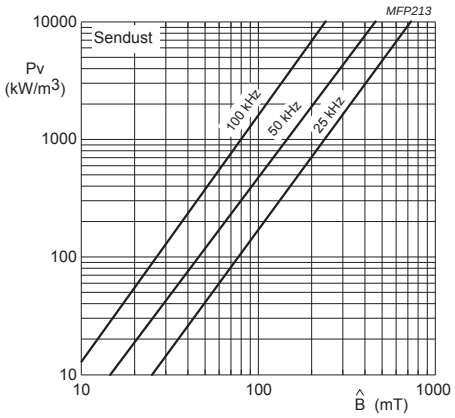

Fig.6 Specific power loss as a function of peak flux density with frequency as a parameter for material 26μ.

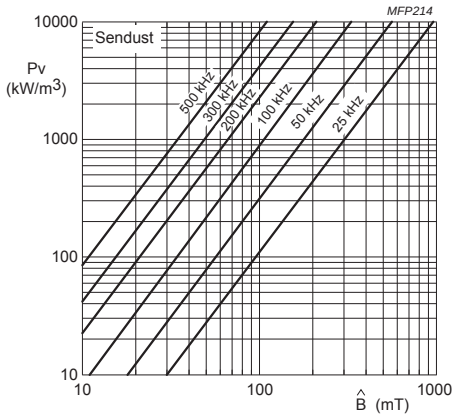

Fig.7 Specific power loss as a function of peak flux density with frequency as a parameter for materials 60, 75, 90 & 125μ.

MPP SPECIFICATIONS

A medium frequency alloy powder material with the lowest loss density for use in power inductors and output chokes.

	CONDITIONS	VALUE	UNIT
μ_i	25 °C; ≤10 kHz; 0.25 mT	14 – 300	
T_C		≥ 460	°C
thermal conductivity		0.08	$W.mm^{-1}.K^{-1}$
linear expansion coefficient		12.9×10^{-6}	K^{-1}
density for 125μ		≈ 8700	kg/m^3

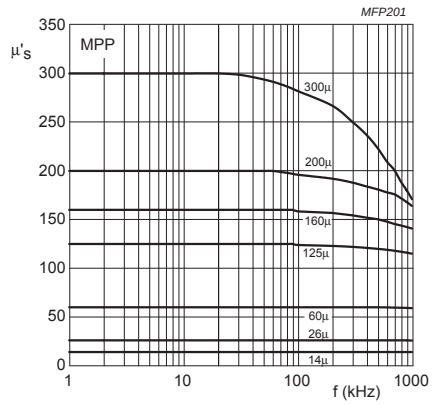

Fig.1 Initial permeability as a function of frequency.

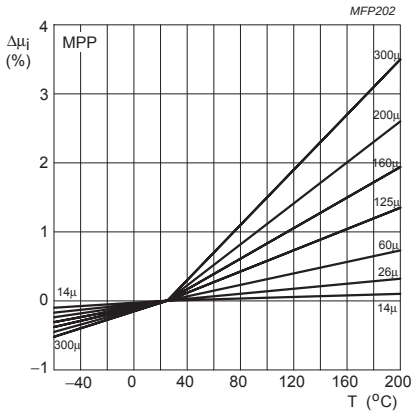

Fig.2 Initial permeability as a function of temperature.

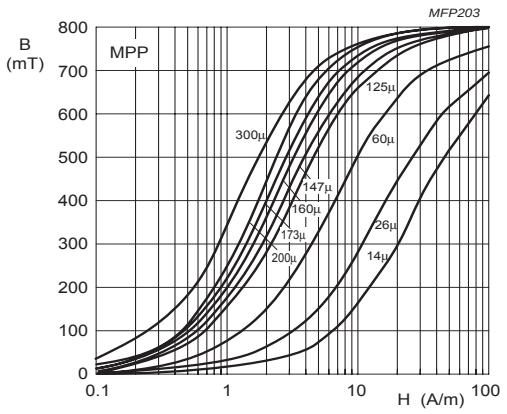

Fig.3 Typical B-H curves.

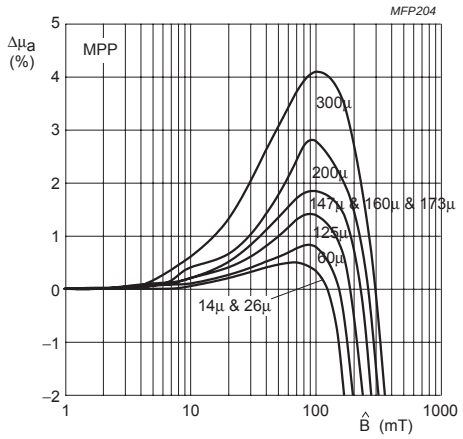

Fig.4 Amplitude permeability as a function of peak flux density.

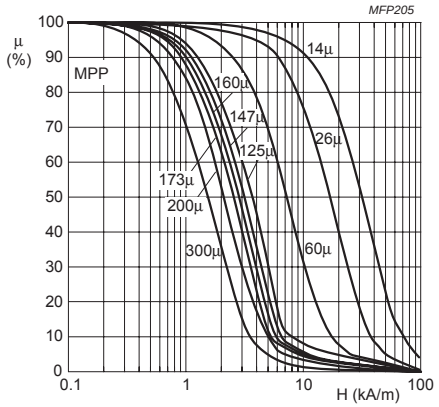

Fig.5 Reversible permeability as a function of magnetic field strength.

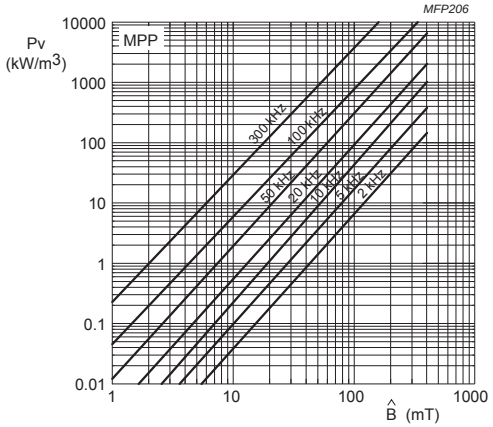

Fig.6 Specific power loss as a function of peak flux density with frequency as a parameter for material 14μ.

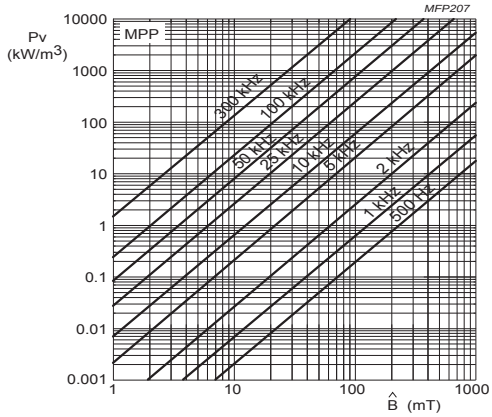

Fig.7 Specific power loss as a function of peak flux density with frequency as a parameter for material 300μ.

HIGH FLUX SPECIFICATIONS

A low frequency alloy powder material with the highest saturation flux density for use in power inductors and output chokes.

	CONDITIONS	VALUE	UNIT
μ_i	25 °C; ≤10 kHz; 0.25 mT	14 – 160	
T_C		≥ 500	°C
thermal conductivity		0.08	$W.mm^{-1}.K^{-1}$
linear expansion coefficient		5.8×10^{-6}	K^{-1}
density for 125μ		≈ 8200	kg/m^3

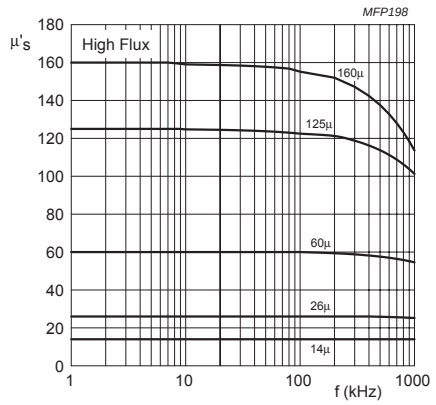

Fig.1 Initial permeability as a function of frequency.

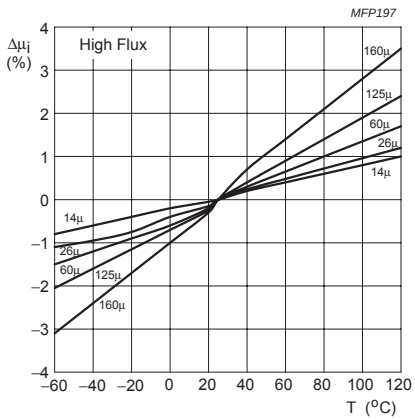

Fig.2 Initial permeability as a function of temperature.

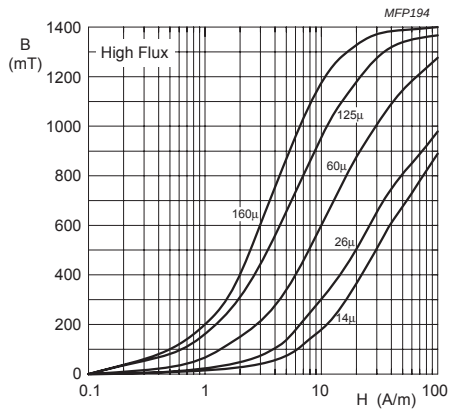

Fig.3 Typical B-H curves.

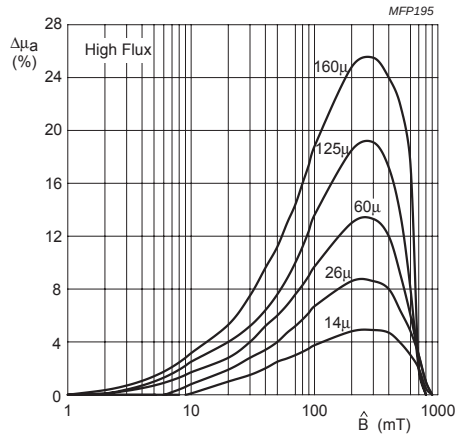

Fig.4 Amplitude permeability as a function of peak flux density.

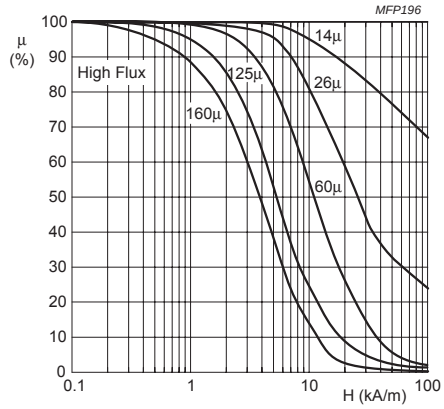

Fig.5 Reversible permeability as a function of magnetic field strength.

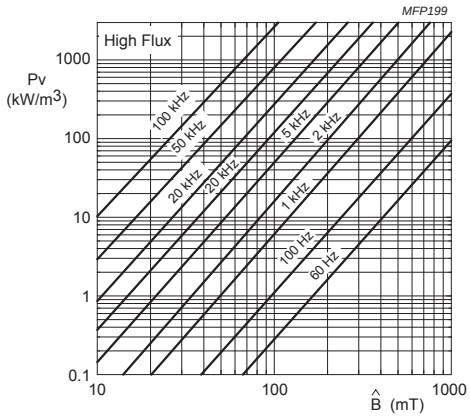

Fig.6 Specific power loss as a function of peak flux density with frequency as a parameter for material 14μ.

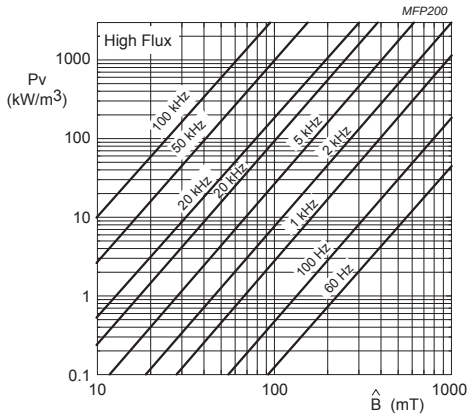

Fig.7 Specific power loss as a function of peak flux density with frequency as a parameter for material 160μ.

3B1 SPECIFICATIONS

Medium permeability MnZn ferrite for use in wideband EMI-suppression (10 - 100 MHz) as well as RF tuning, wideband and balun transformers.

SYMBOL	CONDITIONS	VALUE	UNIT
μ_i	25 °C; ≤10 kHz; 0.25 mT	900 ±20%	
B	25 °C; 10 kHz; 1200 A/m 100 °C; 10 kHz; 1200 A/m	≈ 380 ≈ 230	mT
$\tan\delta/\mu_i$	25 °C; 450 kHz; 0.25 mT	$\leq 50 \times 10^{-6}$	
ρ	DC; 25 °C	≈ 0.2	Ωm
T_C		≥ 150	°C
density		≈ 4800	kg/m³

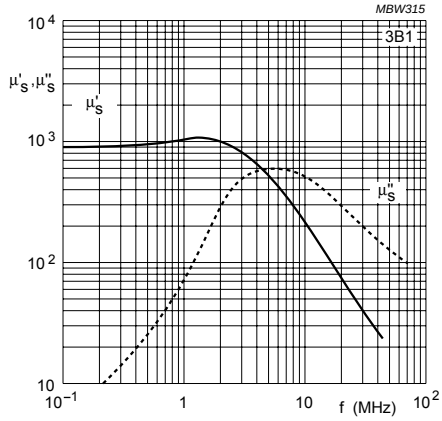

Fig.1 Complex permeability as a function of frequency.

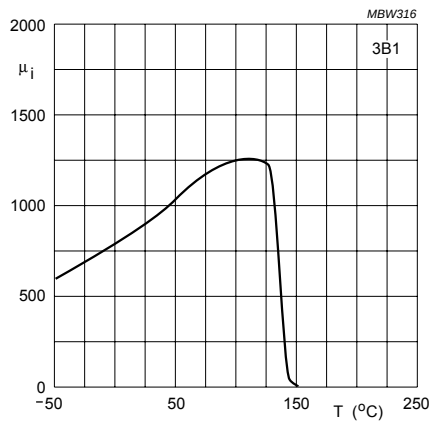

Fig.2 Initial permeability as a function of temperature.

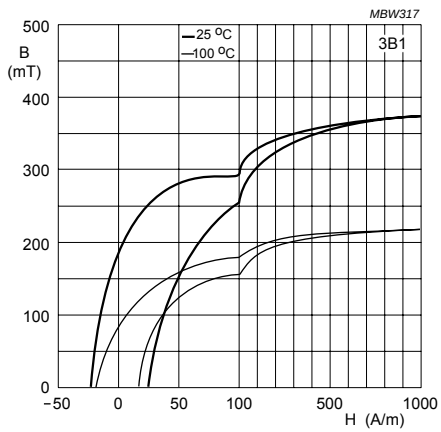

Fig.3 Typical B-H loops.

Soft Ferrites

3B46 SPECIFICATIONS

A medium permeability material with high saturation flux density. This material is suitable as linear filter choke with dc bias current, over a broad temperature range. It has been specifically designed for use in POTS-splitters for DSL applications.

SYMBOL	CONDITIONS	VALUE	UNIT
μ_i	25 °C; ≤10 kHz; 0.25 mT	3800 ± 20%	
B	25 °C;10 kHz; 1200 A/m	≈ 545	mT
	100 °C; 10 kHz; 1200 A/m	≈ 435	
$\tan\delta/\mu_i$	25 °C; 10 kHz; 0.25 mT	$\approx 0.6 \times 10^{-6}$	
	25 °C; 100 kHz; 0.25 mT	$\approx 1.6 \times 10^{-6}$	
η_B	25 °C; 10 kHz; 1.5–3 mT	$\approx 0.12 \times 10^{-6}$	mT^{-1}
α_F	≤10 kHz; 0.25 mT; 5 to 25 °C	$\approx 4.4 \times 10^{-6}$	K^{-1}
	≤10 kHz; 0.25 mT; 25 to 55 °C	$\approx -2.2 \times 10^{-6}$	K^{-1}
ρ	DC; 25 °C	≈ 10	Ωm
T_C		≥ 255	°C
density		≈ 4800	kg/m^3

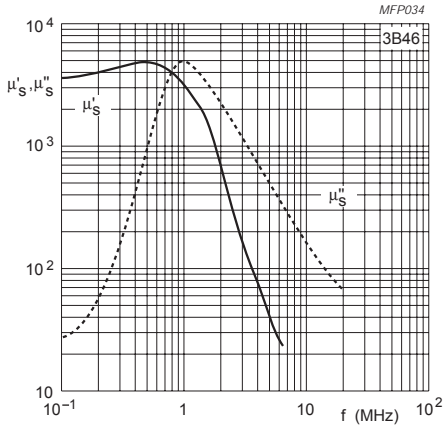

Fig.1 Complex permeability as a function of frequency.

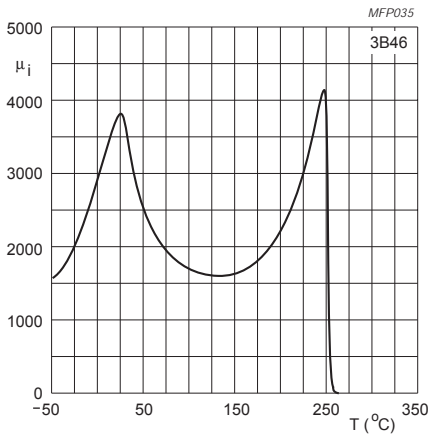

Fig.2 Initial permeability as a function of temperature.

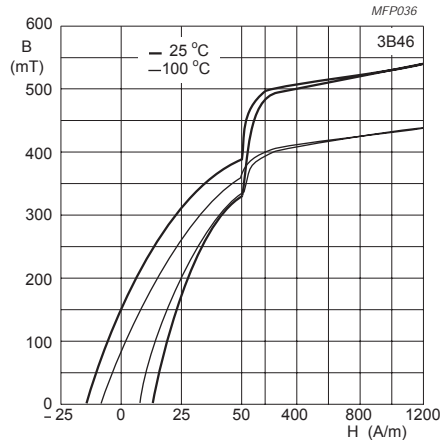

Fig.3 Typical B-H loops.

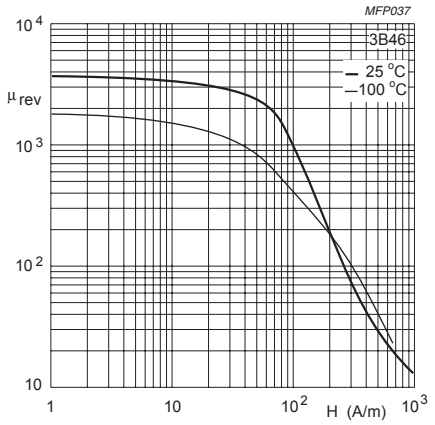

Fig.4 Reversible permeability as a function of magnetic field strength.

3B7 SPECIFICATIONS

A low frequency filter material optimized for frequencies up to 0.1 MHz.

SYMBOL	CONDITIONS	VALUE	UNIT
μ_i	25 °C; ≤10 kHz; 0.25 mT	2300 ±20%	
B	25 °C; 10 kHz; 1200 A/m 100 °C; 10 kHz; 1200 A/m	≈ 440 ≈ 320	mT
$\tan\delta/\mu_i$	25 °C; 100 kHz; 0.25 mT 25 °C; 500 kHz; 0.25 mT 25 °C; 1 MHz; 0.25 mT	$\leq 5 \times 10^{-6}$ $\approx 25 \times 10^{-6}$ $\approx 120 \times 10^{-6}$	
D_F	25 °C; 10 kHz; 0.25 mT	$\leq 4.5 \times 10^{-6}$	
α_F	+20 to 70 °C; ≤10 kHz; 0.25 mT	$(0 \pm 0.6) \times 10^{-6}$	K^{-1}
ρ	DC, 25 °C	≈ 1	Ωm
T_C		≥ 170	°C
density		≈ 4800	kg/m^3

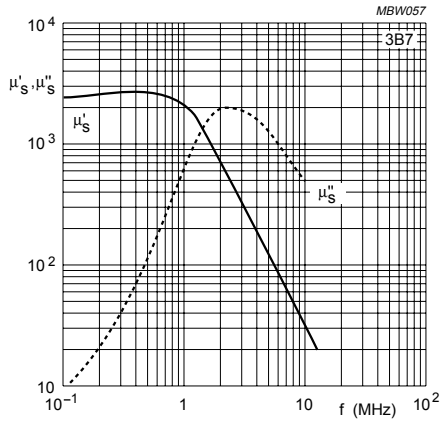

Fig.1 Complex permeability as a function of frequency.

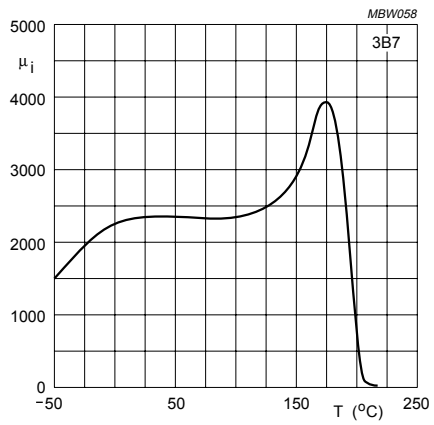

Fig.2 Initial permeability as a function of temperature.

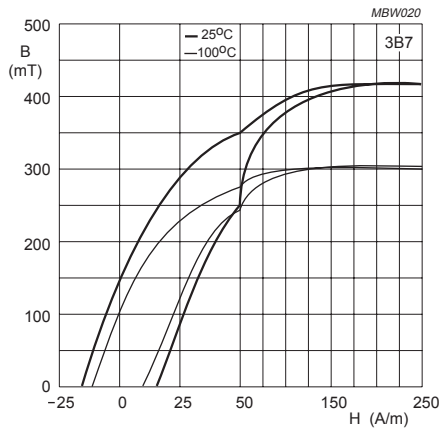

Fig.3 Typical B-H loops.

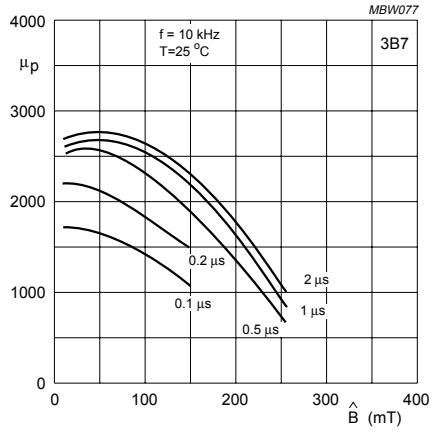

Fig.4 Pulse characteristics (unipolar pulses).

3C11 SPECIFICATIONS

A medium permeability material mainly for use in current compensated chokes in EMI-suppression filters.

SYMBOL	CONDITIONS	VALUE	UNIT
μ_i	25 °C; ≤10 kHz; 0.25 mT	4300 ± 20%	
B	25 °C; 10 kHz; 1200 A/m 100 °C; 10 kHz; 1200 A/m	≈ 390 ≈ 230	mT
$\tan\delta/\mu_i$	25 °C; 100 kHz; 0.25 mT 25 °C; 300 kHz; 0.25 mT	$\leq 20 \times 10^{-6}$ $\leq 200 \times 10^{-6}$	
ρ	DC; 25 °C	≈ 1	Ωm
T_C		≥ 125	°C
density		≈ 4900	kg/m³

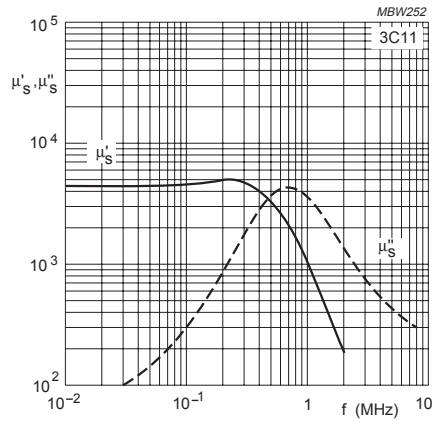

Fig.1 Complex permeability as a function of frequency.

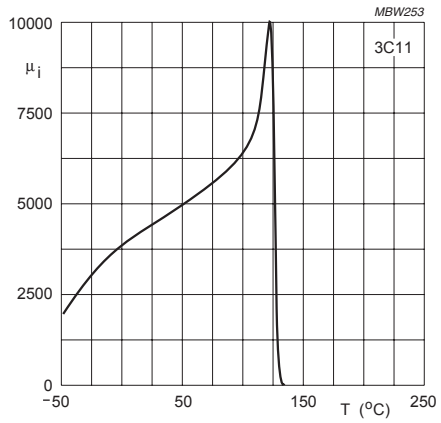

Fig.2 Initial permeability as a function of temperature.

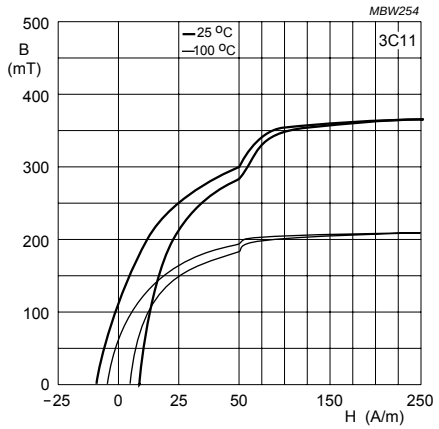

Fig.3 Typical B-H loops.

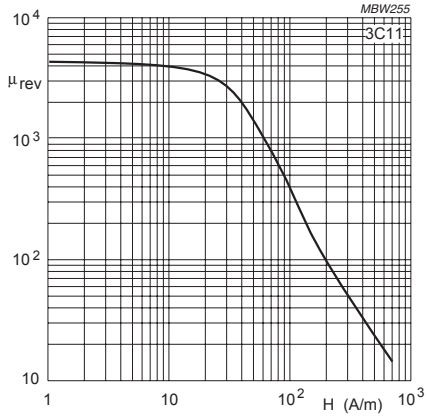

Fig.4 Reversible permeability as a function of magnetic field strength.

3C30 SPECIFICATIONS

A low frequency, high Bsat power material optimized for use in line output transformers at frequencies up to 0.2 MHz.

SYMBOL	CONDITIONS	VALUE	UNIT
μ_i	25 °C; ≤10 kHz; 0.25 mT	2100 ±20%	
μ_a	100 °C; 25 kHz; 200 mT	5000 ±25%	
B	25 °C; 10 kHz; 1200 A/m	≈ 500	mT
	100 °C; 10 kHz; 1200 A/m	≈ 440	
P_V	100 °C; 25 kHz; 200 mT	≤ 80	kW/m^3
	100 °C; 100 kHz; 100 mT	≤ 80	
	100 °C; 100 kHz; 200 mT	≈ 450	
ρ	DC; 25 °C	≈ 2	Ωm
T_C		≥ 240	°C
density		≈ 4800	kg/m^3

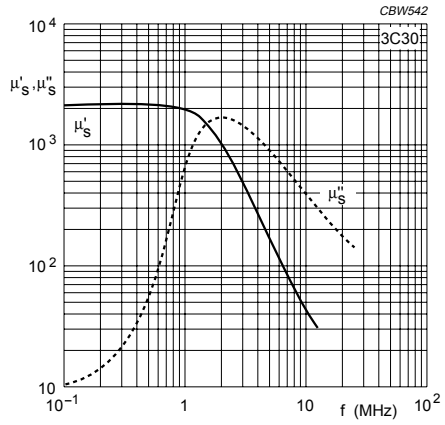

Fig.1 Complex permeability as a function of frequency.

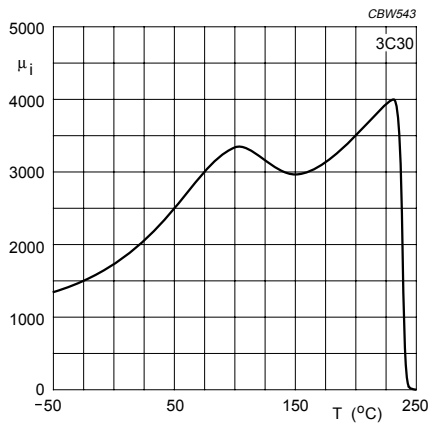

Fig.2 Initial permeability as a function of temperature.

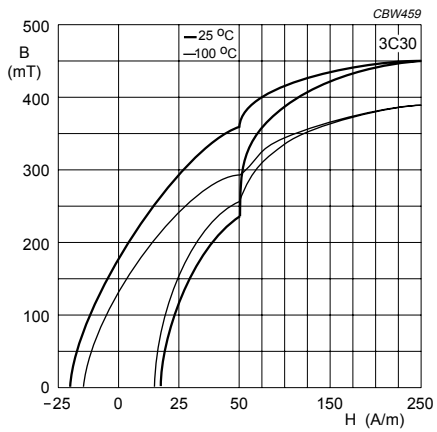

Fig.3 Typical B-H loops.

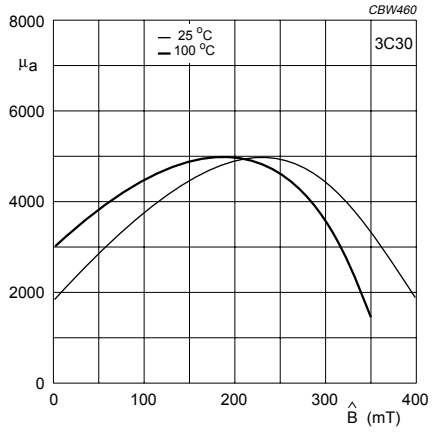

Fig.4 Amplitude permeability as a function of peak flux density.

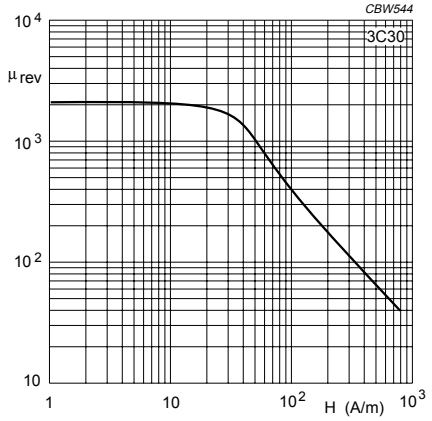

Fig.5 Reversible permeability as a function of magnetic field strength.

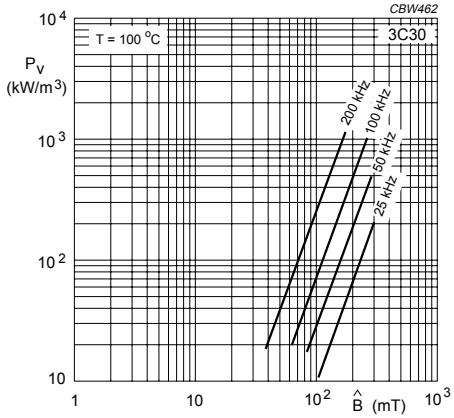

Fig.6 Specific power loss as a function of peak flux density with frequency as a parameter.

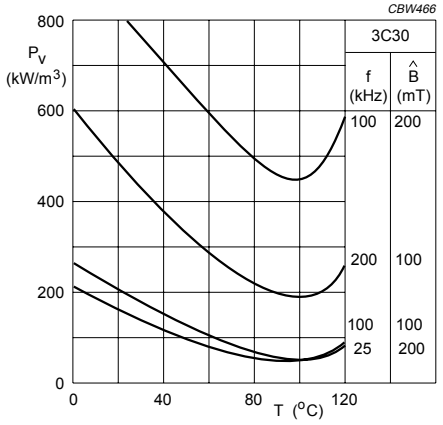

Fig.7 Specific power loss for several frequency/flux density combinations as a function of temperature.

3C34 SPECIFICATIONS

A medium frequency, high Bsat power material optimized for use in line output transformers at frequencies up to 0.3 MHz.

SYMBOL	CONDITIONS	VALUE	UNIT
μ_i	25 °C; ≤10 kHz; 0.25 mT	2100 ±20%	
μ_a	100 °C; 25 kHz; 200 mT	6500 ±25%	
B	25 °C; 10 kHz; 1200 A/m	≈ 500	mT
	100 °C; 10 kHz; 1200 A/m	≈ 440	mT
P_V	100 °C; 100 kHz; 100 mT	≤ 60	kW/m^3
	100 °C; 100 kHz; 200 mT	≤ 400	
ρ	DC; 25 °C	≈ 5	Ωm
T_C		≥ 240	°C
density		≈ 4800	kg/m^3

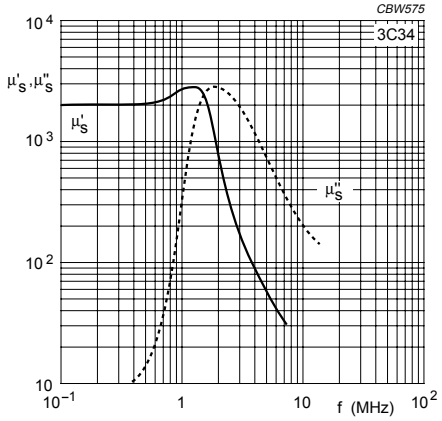

Fig.1 Complex permeability as a function of frequency.

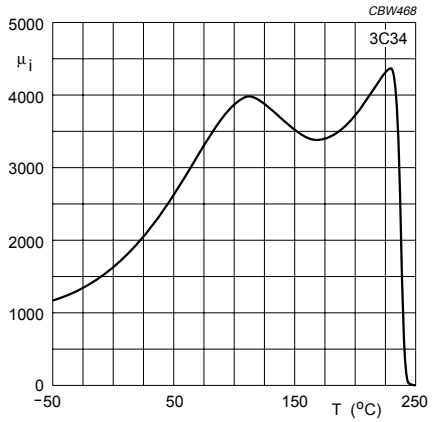

Fig.2 Initial permeability as a function of temperature.

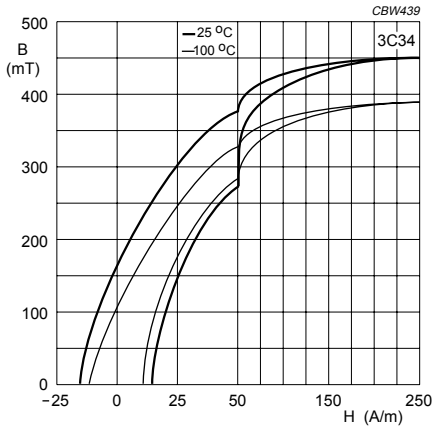

Fig.3 Typical B-H loops.

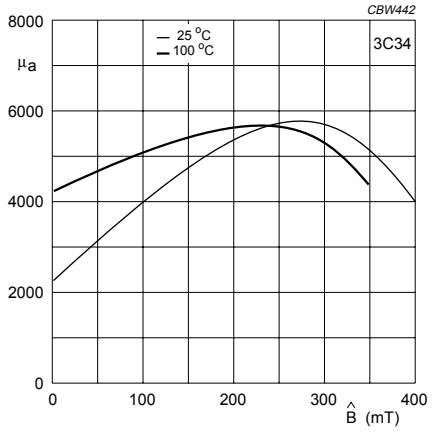

Fig.4 Amplitude permeability as a function of peak flux density.

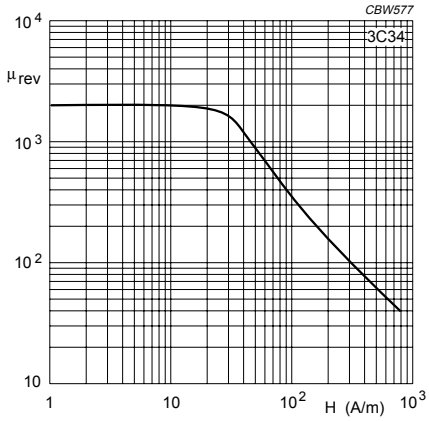

Fig.5 Reversible permeability as a function of magnetic field strength.

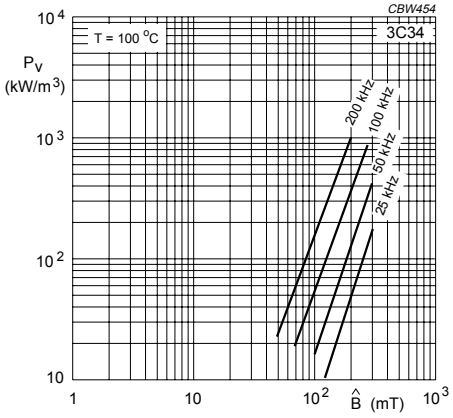

Fig.6 Specific power loss as a function of peak flux density with frequency as a parameter.

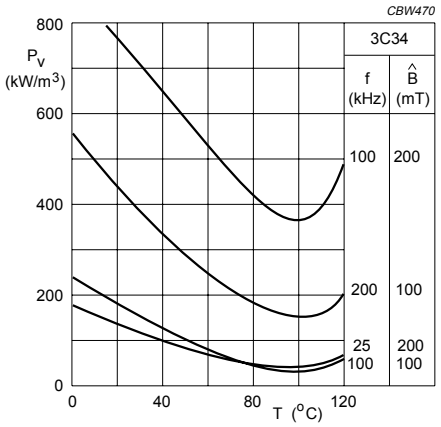

Fig.7 Specific power loss for several frequency/flux density combinations as a function of temperature.

3C81 SPECIFICATIONS

A low frequency power material with minimum power losses around 60 °C for use in power and general purpose transformers at frequencies up to 0.2 MHz.

SYMBOL	CONDITIONS	VALUE	UNIT
μ_i	25 °C; ≤10 kHz; 0.25 mT	2700 ±20%	
μ_a	100 °C; 25 kHz; 200 mT	5500 ±20%	
B	25 °C; 10 kHz; 1200 A/m 100 °C; 10 kHz; 1200 A/m	≈ 450 ≈ 360	mT
P_V	100 °C; 25 kHz; 200 mT	≤ 185	kW/m^3
ρ	DC; 25 °C	≈ 1	Ωm
T_C		≥ 210	°C
density		≈ 4800	kg/m^3

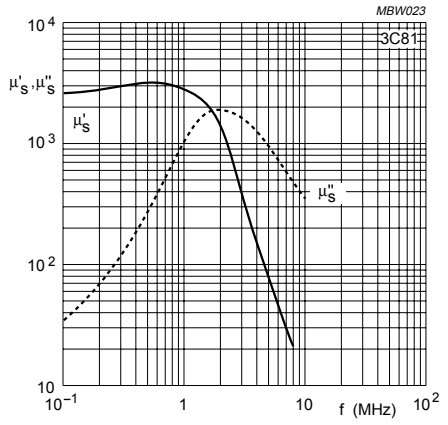

Fig.1 Complex permeability as a function of frequency.

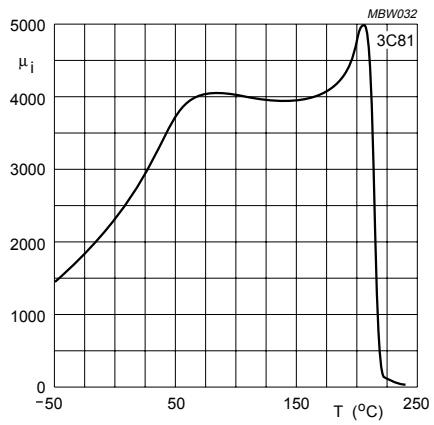

Fig.2 Initial permeability as a function of temperature.

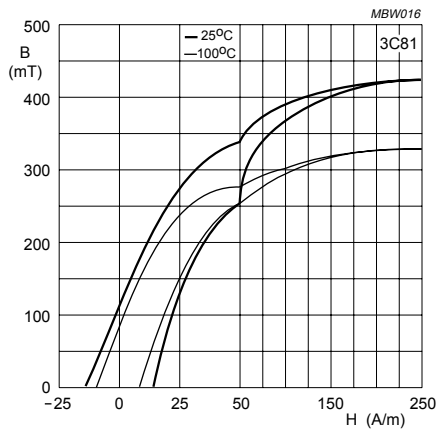

Fig.3 Typical B-H loops.

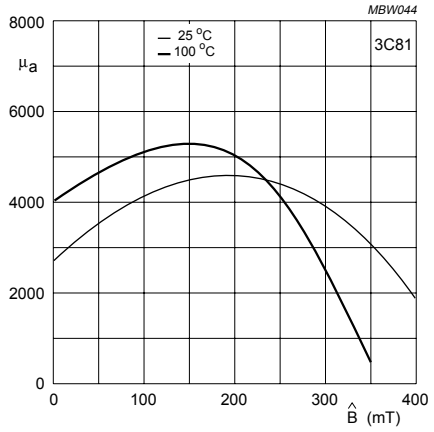

Fig.4 Amplitude permeability as a function of peak flux density.

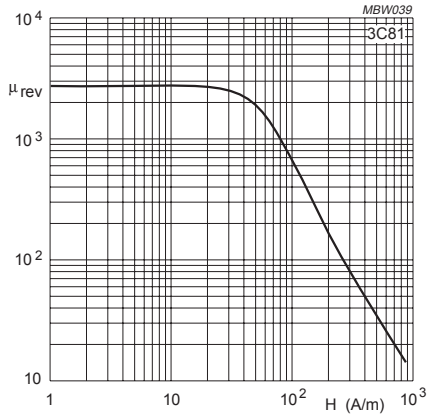

Fig.5 Reversible permeability as a function of magnetic field strength.

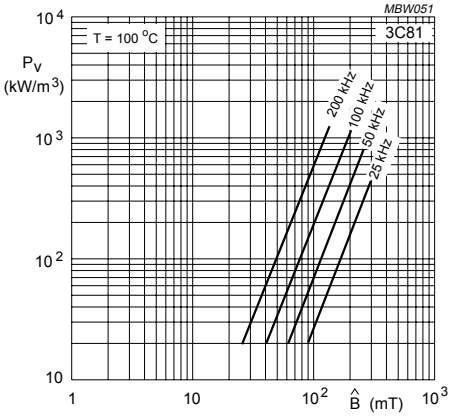

Fig.6 Specific power loss as a function of peak flux density with frequency as a parameter.

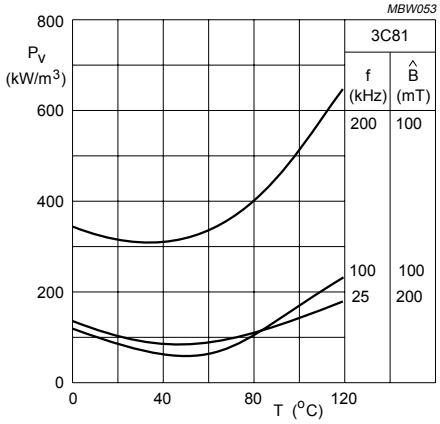

Fig.7 Specific power loss for several frequency/flux density combinations as a function of temperature.

3C90 SPECIFICATIONS

A low frequency power material for use in power and general purpose transformers at frequencies up to 0.2 MHz.

	CONDITIONS	VALUE	UNIT
μ_i	25 °C; ≤10 kHz; 0.25 mT	2300 ±20%	
μ_a	100 °C; 25 kHz; 200 mT	5500 ±25%	
B	25 °C; 10 kHz; 1200 A/m	≈ 470	mT
	100 °C; 10 kHz; 1200 A/m	≈ 380	mT
P_V	100 °C; 25 kHz; 200 mT	≤ 80	kW/m^3
	100 °C; 100 kHz; 100 mT	≤ 80	
	100 °C; 100 kHz; 200 mT	≈ 450	
ρ	DC, 25 °C	≈ 5	Ωm
T_C		≥ 220	°C
density		≈ 4800	kg/m^3

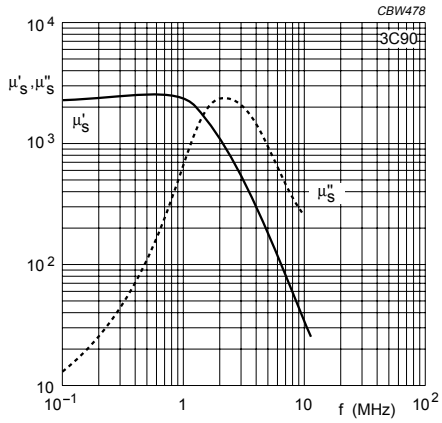

Fig.1 Complex permeability as a function of frequency.

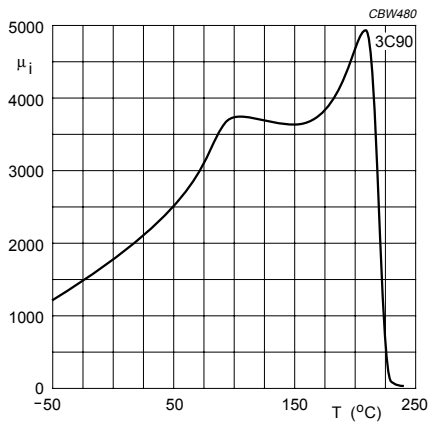

Fig.2 Initial permeability as a function of temperature.

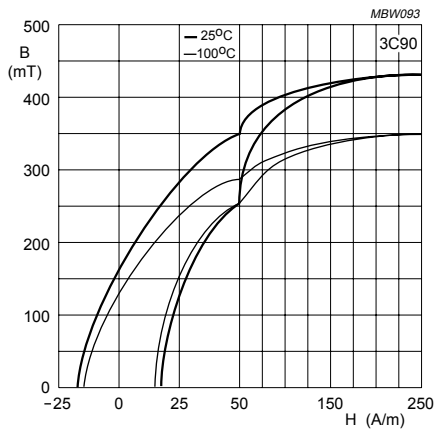

Fig.3 Typical B-H loops.

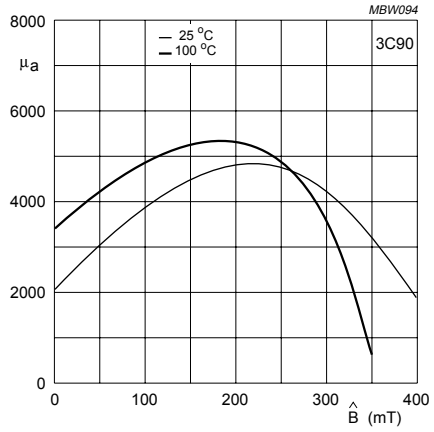

Fig.4 Amplitude permeability as a function of peak flux density.

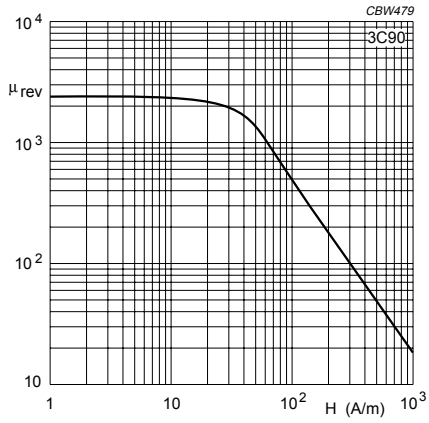

Fig.5 Reversible permeability as a function of magnetic field strength.

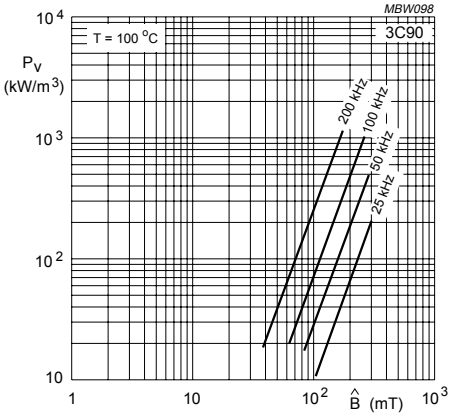

Fig.6 Specific power loss as a function of peak flux density with frequency as a parameter.

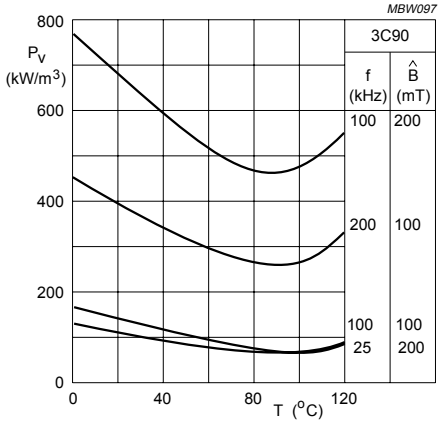

Fig.7 Specific power loss for several frequency/flux density combinations as a function of temperature.

3C91 SPECIFICATIONS

A medium frequency power material with minimum power losses around 60 °C for use in power and general purpose transformers at frequencies up to 0.3 MHz.

SYMBOL	CONDITIONS	VALUE	UNIT
μ_i	25 °C; ≤10 kHz; 0.25 mT	3000 ±20%	
μ_a	100 °C; 25 kHz; 200 mT	5500 ±25%	
B	25 °C; 10 kHz; 1200 A/m	≈ 470	mT
	100 °C; 10 kHz; 1200 A/m	≈ 370	mT
P_V	60 °C; 100 kHz; 100 mT	≤ 40	kW/m^3
	60 °C; 100 kHz; 200 mT	≈ 300	
ρ	DC, 25 °C	≈ 5	Ωm
T_C		≥ 220	°C
density		≈ 4800	kg/m^3

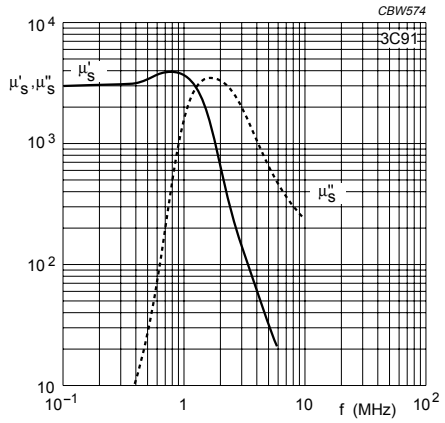

Fig.1 Complex permeability as a function of frequency.

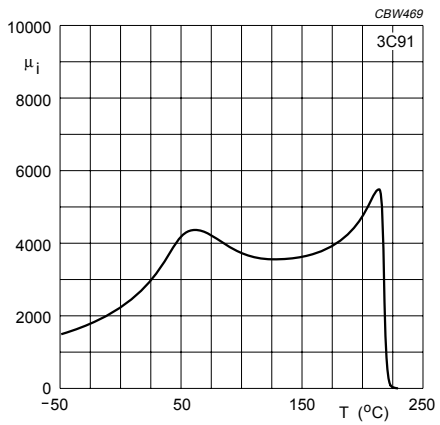

Fig.2 Initial permeability as a function of temperature.

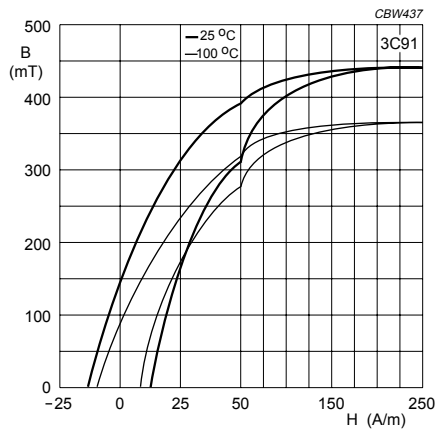

Fig.3 Typical B-H loops.

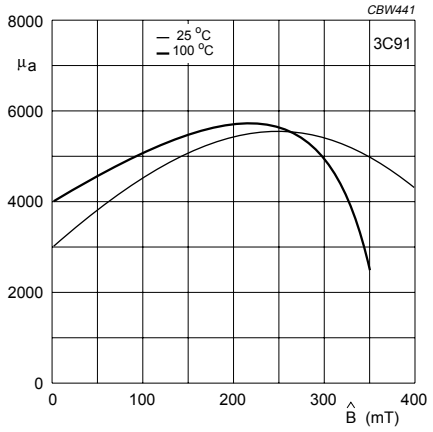

Fig.4 Amplitude permeability as a function of peak flux density.

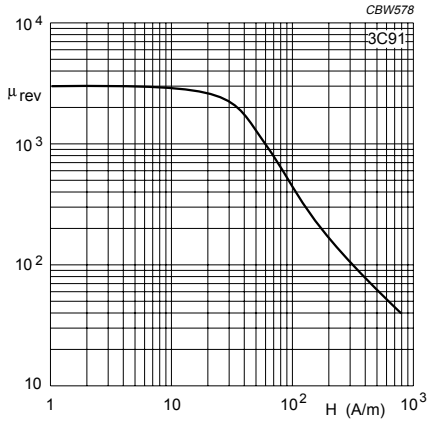

Fig.5 Reversible permeability as a function of magnetic field strength.

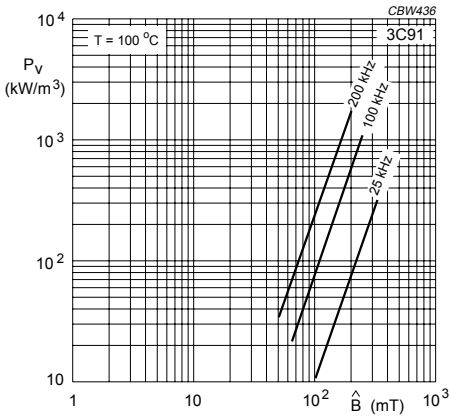

Fig.6 Specific power loss as a function of peak flux density with frequency as a parameter.

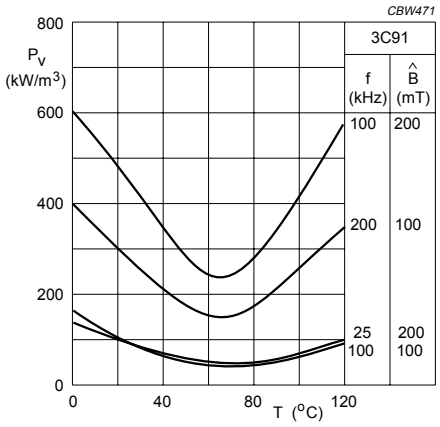

Fig.7 Specific power loss for several frequency/flux density combinations as a function of temperature.

3C92 SPECIFICATIONS

A low frequency, high Bsat power material for use in power inductors at frequencies up to 0.2 MHz.

SYMBOL	CONDITIONS	VALUE	UNIT
μ_i	25 °C; ≤10 kHz; 0.25 mT	1500 ±20%	
μ_a	100 °C; 25 kHz; 200 mT	≈ 5000	
B	25 °C; 10 kHz; 1200 A/m	≈ 540	mT
	100 °C; 10 kHz; 1200 A/m	≈ 460	
	140 °C; 10 kHz; 1200 A/m	≈ 400	
P_V	100 °C; 100 kHz; 100 mT	≈ 50	kW/m^3
	100 °C; 100 kHz; 200 mT	≈ 350	
ρ	DC; 25 °C	≈ 5	Ωm
T_C		≥ 280	°C
density		≈ 4800	kg/m^3

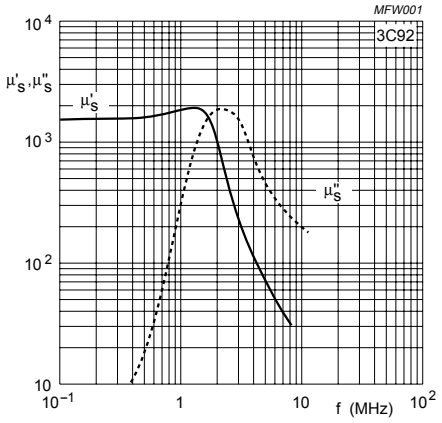

Fig.1 Complex permeability as a function of frequency.

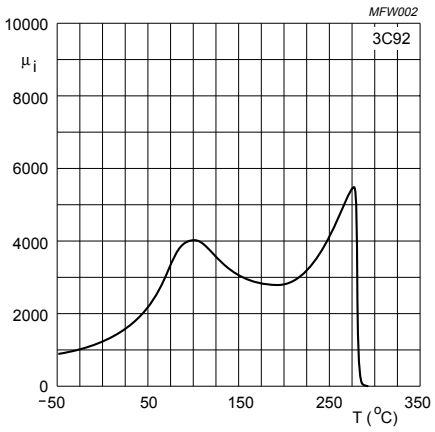

Fig.2 Initial permeability as a function of temperature.

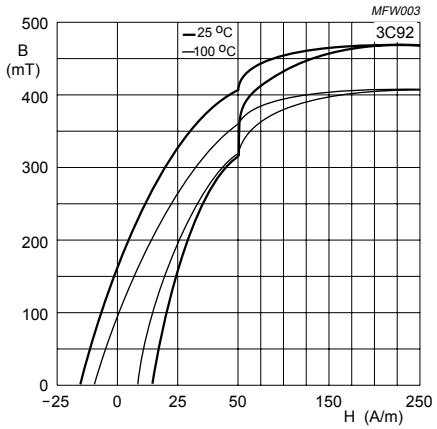

Fig.3 Typical B-H loops.

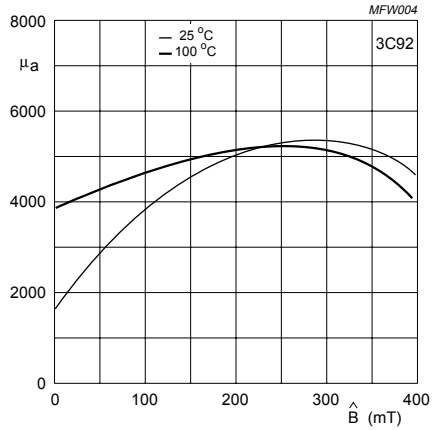

Fig.4 Amplitude permeability as a function of peak flux density.

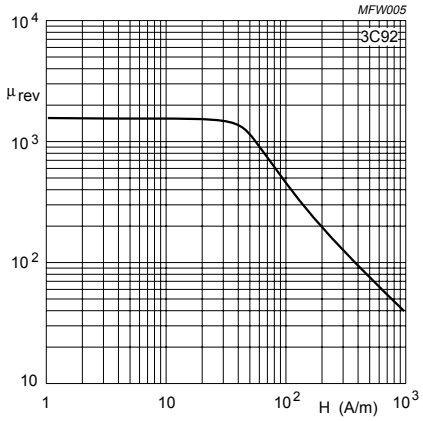

Fig.5 Reversible permeability as a function of magnetic field strength.

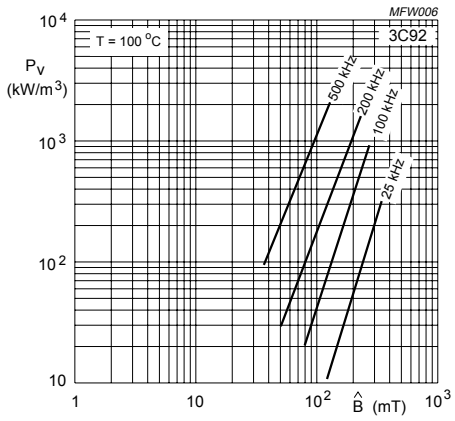

Fig.6 Specific power loss as a function of peak flux density with frequency as a parameter.

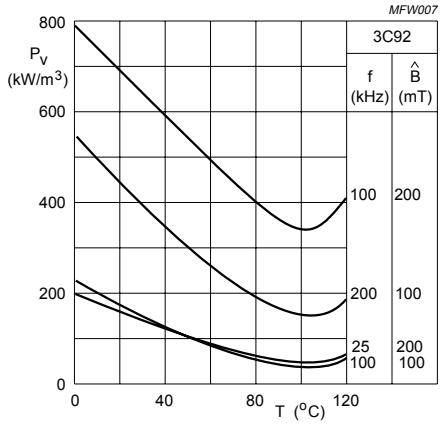

Fig.7 Specific power loss for several frequency/flux density combinations as a function of temperature.

3C93 SPECIFICATIONS

A low to medium frequency power material with minimum power losses around 140 °C for use in power transformers at frequencies up to 0.5 MHz.

	CONDITIONS	VALUE	UNIT
μ_i	25 °C; ≤10 kHz; 0.25 mT	1800 ±20%	
μ_a	100 °C; 25 kHz; 200 mT	≈ 5000	
B	25 °C; 10 kHz; 1200 A/m	≈ 520	mT
	100 °C; 10 kHz; 1200 A/m	≈ 430	
	140 °C; 10 kHz; 1200 A/m	≈ 360	
P_V	140 °C; 100 kHz; 100 mT	≈ 50	kW/m^3
	140 °C; 100 kHz; 200 mT	≈ 350	
	140 °C; 500 kHz; 50 mT	≈ 300	
ρ	DC; 25 °C	≈ 5	Ωm
T_C		≥ 240	°C
density		≈ 4800	kg/m^3

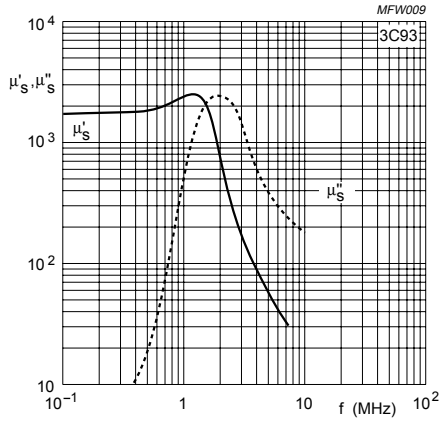

Fig.1 Complex permeability as a function of frequency.

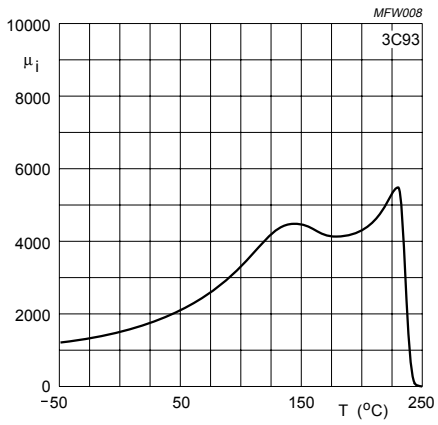

Fig.2 Initial permeability as a function of temperature.

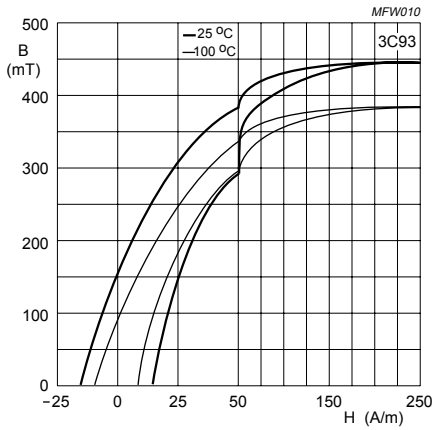

Fig.3 Typical B-H loops.

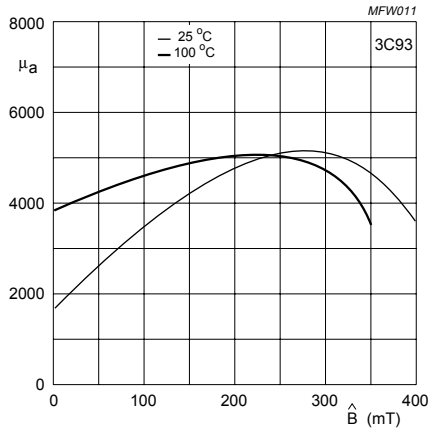

Fig.4 Amplitude permeability as a function of peak flux density.

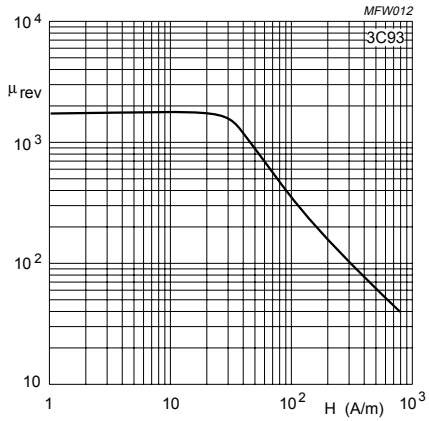

Fig.5 Reversible permeability as a function of magnetic field strength.

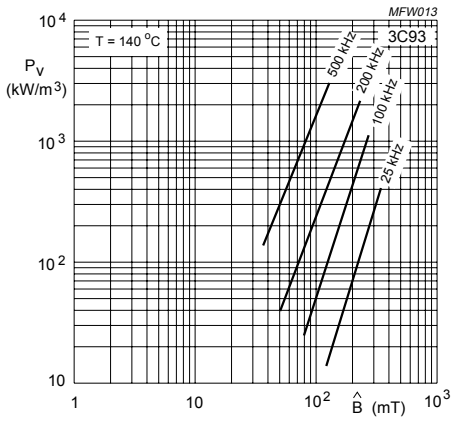

Fig.6 Specific power loss as a function of peak flux density with frequency as a parameter.

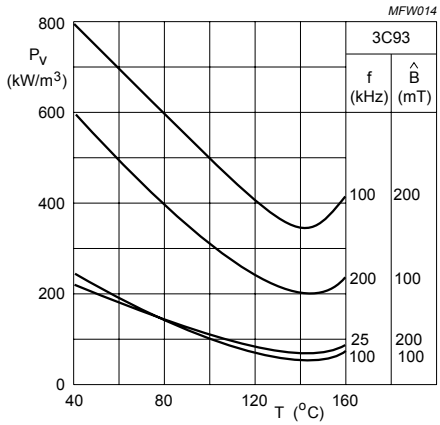

Fig.7 Specific power loss for several frequency/flux density combinations as a function of temperature.

3C94 SPECIFICATIONS

A low frequency power material for use in power and general purpose transformers at frequencies up to 0.3 MHz.

SYMBOL	CONDITIONS	VALUE	UNIT
μ_i	25 °C; ≤10 kHz; 0.25 mT	2300 ±20%	
μ_a	100 °C; 25 kHz; 200 mT	5500 ±25%	
B	25 °C; 10 kHz; 1200 A/m 100 °C; 10 kHz; 1200 A/m	≈ 470 ≈ 380	mT
P_V	100 °C; 100 kHz; 100 mT 100 °C; 100 kHz; 200 mT	≈ 50 ≈ 350	kW/m^3
ρ	DC, 25 °C	≈ 5	Ωm
T_C		≥ 220	°C
density		≈ 4800	kg/m^3

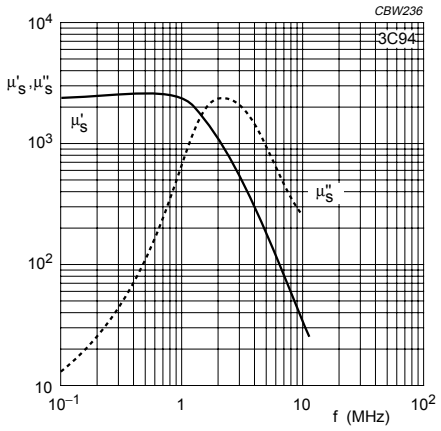

Fig.1 Complex permeability as a function of frequency.

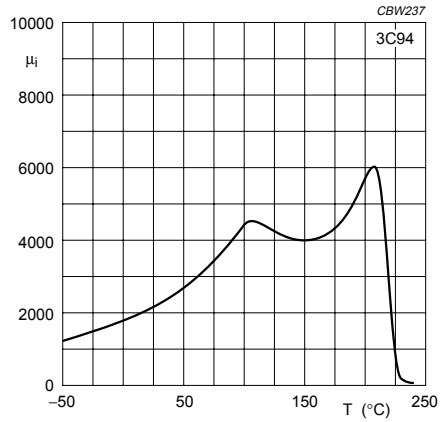

Fig.2 Initial permeability as a function of temperature.

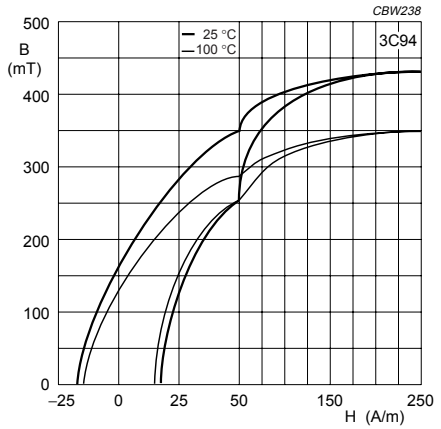

Fig.3 Typical B-H loops.

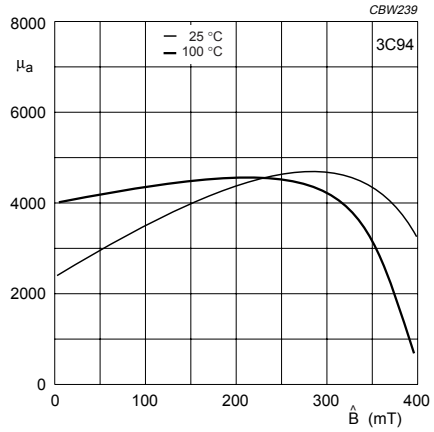

Fig.4 Amplitude permeability as a function of peak flux density.

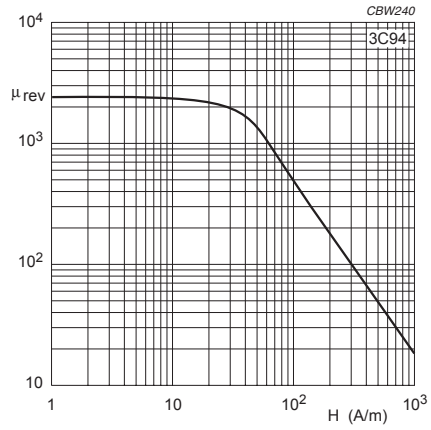

Fig.5 Reversible permeability as a function of magnetic field strength.

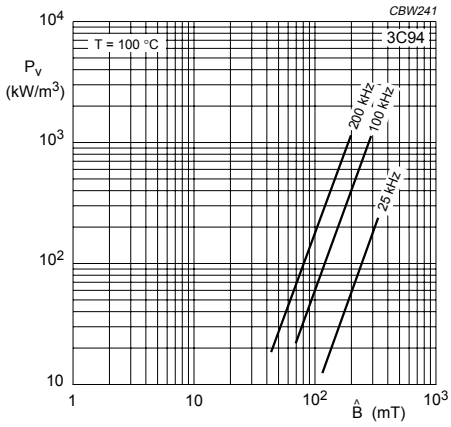

Fig.6 Specific power loss as a function of peak flux density with frequency as a parameter.

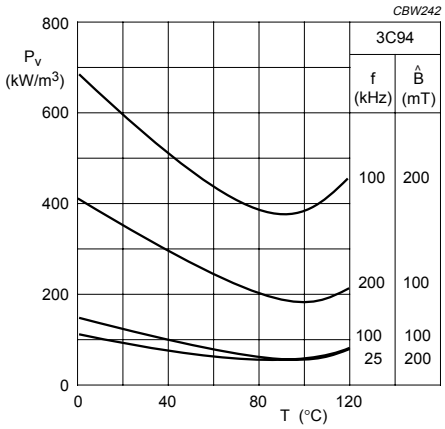

Fig.7 Specific power loss for several frequency/flux density combinations as a function of temperature.

3C95 SPECIFICATIONS

A low to medium frequency power material with low power losses from 25 to 100 °C for use in power transformers at frequencies up to 0.5 MHz. Especially suited for broad temperature range applications like automotive, lighting and mobile / handheld.

SYMBOL	CONDITIONS	VALUE	UNIT
μ_i	25 °C; ≤10 kHz; 0.25 mT	3000 ± 20 %	
μ_a	100 °C; 25 kHz; 200 mT	≈ 5000	
B	25 °C; 10 kHz; 1200 A/m	≈ 530	mT
	100 °C; 10 kHz; 1200 A/m	≈ 410	
P_V	25 °C; 100 kHz; 200 mT	≈ 350	kW/m^3
	100 °C; 100 kHz; 200 mT	≈ 290	
ρ	DC, 25 °C	≈ 5	Ωm
T_C		≥ 215	°C
density		≈ 4800	kg/m^3

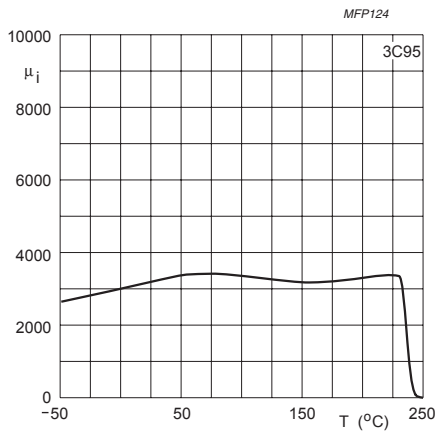

Fig.1 Initial permeability as a function of temperature.

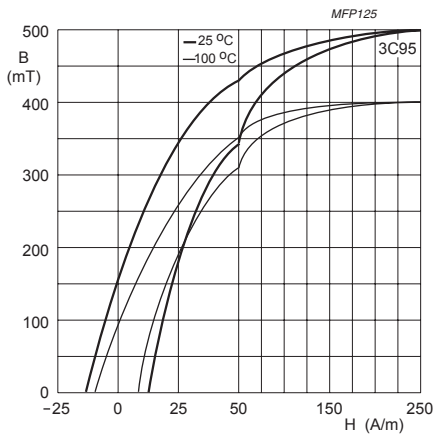

Fig.2 Typical B-H loops.

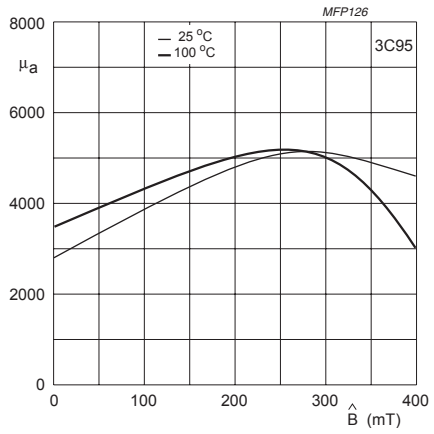

Fig.3 Amplitude permeability as a function of peak flux density.

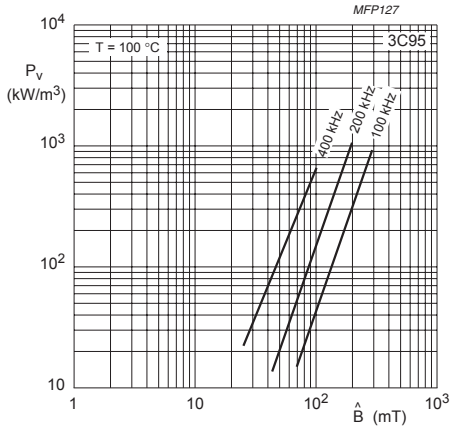

Fig.4 Specific power loss as a function of peak flux density with frequency as a parameter.

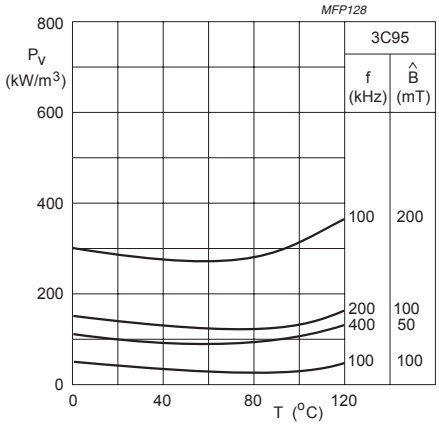

Fig.5 Specific power loss for several frequency/flux density combinations as a function of temperature.

3C96 SPECIFICATIONS

A low to medium frequency power material for use in power and general purpose transformers at frequencies up to 0.4 MHz.

	CONDITIONS	VALUE	UNIT
μ_i	25 °C; ≤10 kHz; 0.25 mT	2000 ±20%	
μ_a	100 °C; 25 kHz; 200 mT	≈ 5500	
B	25 °C; 10 kHz; 1200 A/m	≈ 500	mT
	100 °C; 10 kHz; 1200 A/m	≈ 440	
P_V	100 °C; 100 kHz; 100 mT	≈ 40	kW/m^3
	100 °C; 100 kHz; 200 mT	≈ 300	
	100 °C; 500 kHz; 50 mT	≈ 250	
ρ	DC; 25 °C	≈ 5	Ωm
T_C		≥ 240	°C
density		≈ 4800	kg/m^3

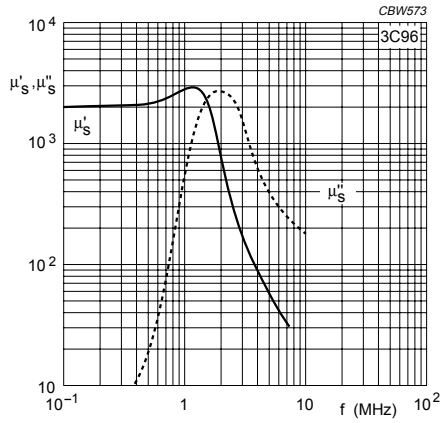

Fig.1 Complex permeability as a function of frequency.

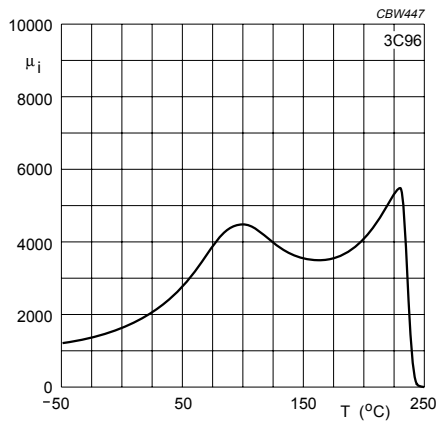

Fig.2 Initial permeability as a function of temperature.

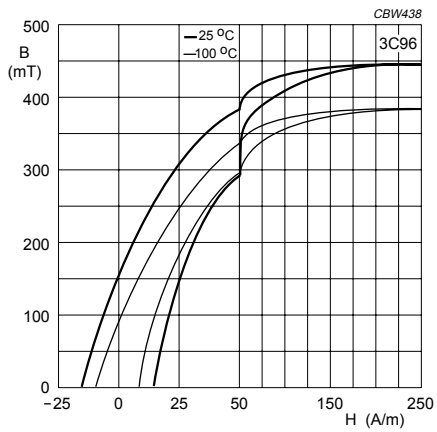

Fig.3 Typical B-H loops.

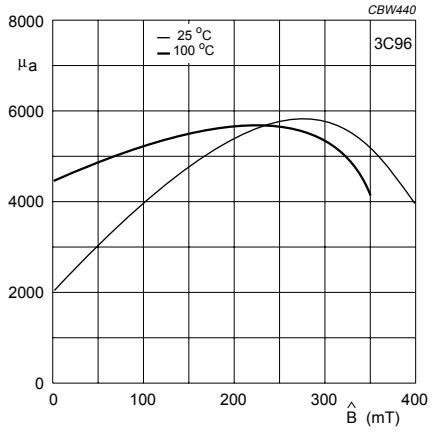

Fig.4 Amplitude permeability as a function of peak flux density.

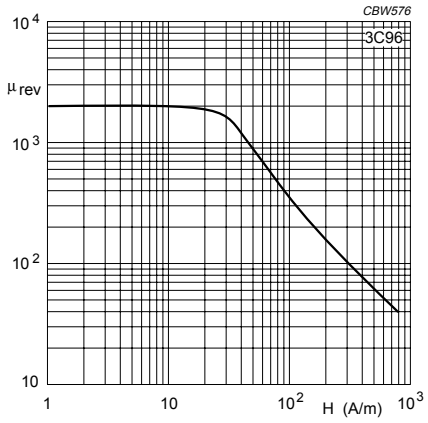

Fig.5 Reversible permeability as a function of magnetic field strength.

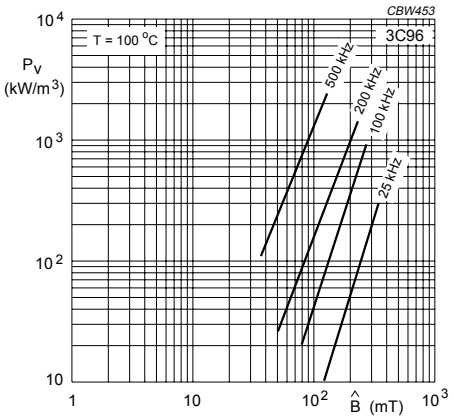

Fig.6 Specific power loss as a function of peak flux density with frequency as a parameter.

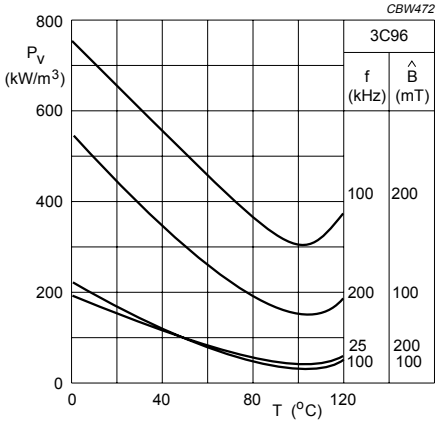

Fig.7 Specific power loss for several frequency/flux density combinations as a function of temperature.

3C98 SPECIFICATIONS

A low to medium frequency power material for use in power and general purpose transformers at frequencies up to 0.4 MHz.

	CONDITIONS	VALUE	UNIT
μ_i	25 °C; ≤10 kHz; 0.25 mT	2500 ±20%	
μ_a	100 °C; 25 kHz; 200 mT	≈ 5500	
B	25 °C; 10 kHz; 1200 A/m	≈ 530	mT
	100 °C; 10 kHz; 1200 A/m	≈ 440	
P_V	25 °C; 100 kHz; 200 mT	≈ 500	kW/m^3
	60 °C; 100 kHz; 200 mT	≈ 350	
	100 °C; 100 kHz; 200 mT	≈ 250	
ρ	DC; 25 °C	≈ 8	Ωm
T_C		≥ 230	°C
density		≈ 4850	kg/m^3

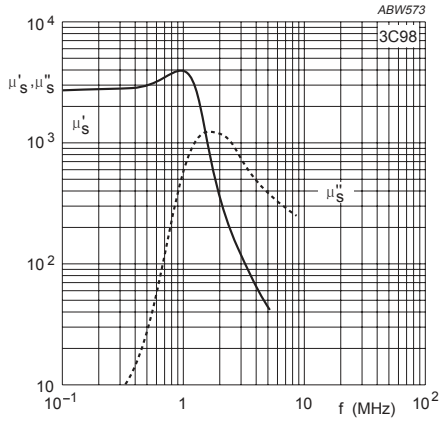

Fig.1 Complex permeability as a function of frequency.

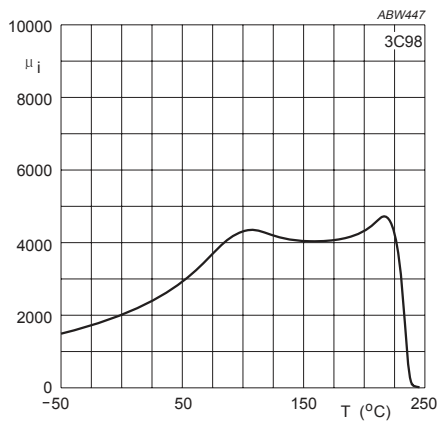

Fig.2 Initial permeability as a function of temperature.

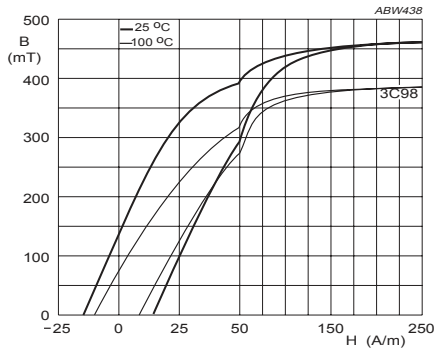

Fig.3 Typical B-H loops.

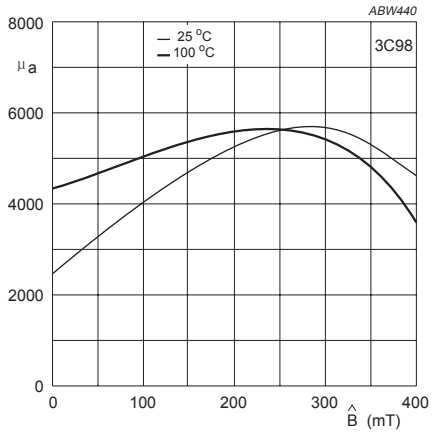

Fig.4 Amplitude permeability as a function of peak flux density.

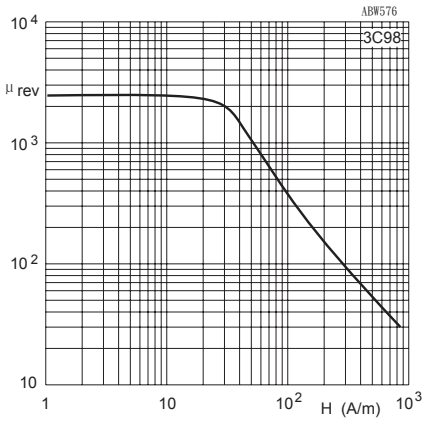

Fig.5 Reversible permeability as a function of magnetic field strength.

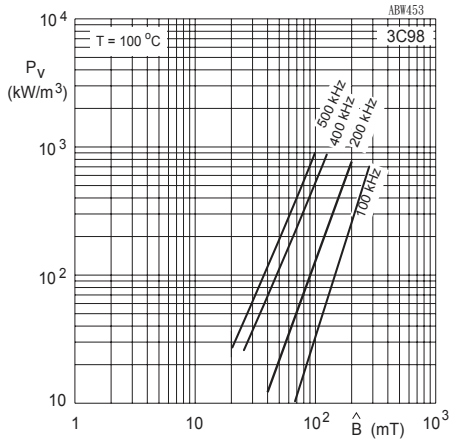

Fig.6 Specific power loss as a function of peak flux density with frequency as a parameter.

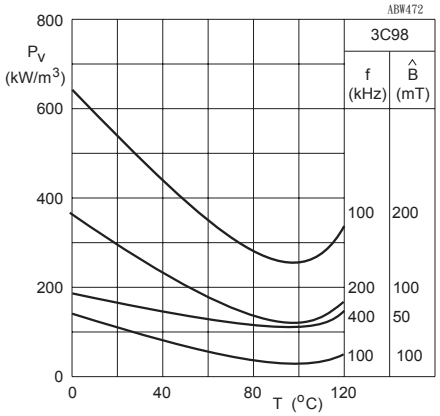

Fig.7 Specific power loss for several frequency/flux density combinations as a function of temperature.

DATA SHEET STATUS DEFINITIONS

DATA SHEET STATUS	PRODUCT STATUS	DEFINITIONS
Preliminary specification	Development	This data sheet contains preliminary data. Ferroxcube reserves the right to make changes at any time without notice in order to improve design and supply the best possible product.
Product specification	Production	This data sheet contains final specifications. Ferroxcube reserves the right to make changes at any time without notice in order to improve design and supply the best possible product.

DISCLAIMER

Life support applications ☒ These products are not designed for use in life support appliances, devices, or systems where malfunction of these products can reasonably be expected to result in personal injury. Ferroxcube customers using or selling these products for use in such applications do so at their own risk and agree to fully indemnify Ferroxcube for any damages resulting from such application.

PRODUCT STATUS DEFINITIONS

STATUS	INDICATION	DEFINITION
Prototype	prot	These are products that have been made as development samples for the purposes of technical evaluation only. The data for these types is provisional and is subject to change.
Design-in	des	These products are recommended for new designs.
Preferred		These products are recommended for use in current designs and are available via our sales channels.
Support	sup	These products are **not** recommended for new designs and may not be available through all of our sales channels. Customers are advised to check for availability.

3D3 SPECIFICATIONS

A medium frequency filter and tuning material optimized for frequencies from 0.2 up to 2 MHz.

SYMBOL	CONDITIONS	VALUE	UNIT
μ_i	25 °C; ≤10 kHz; 0.25 mT	750 ±20%	
B	25 °C; 10 kHz; 1200 A/m 100 °C; 10 kHz; 1200 A/m	≈ 380 ≈ 310	mT
$\tan\delta/\mu_i$	25 °C; 300 kHz; 0.25 mT 25 °C; 1 MHz; 0.25 mT	$\leq 10 \times 10^{-6}$ $\leq 30 \times 10^{-6}$	
η_B	25 °C; 100 kHz; 1.5 to 3 mT	$\leq 1.8 \times 10^{-3}$	T^{-1}
D_F	25 °C; 10 kHz; 0.25 mT	$\leq 12 \times 10^{-6}$	
α_F	25 to 70 °C; ≤10 kHz; 0.25 mT	$(1.5 \pm 1) \times 10^{-6}$	K^{-1}
ρ	DC; 25 °C	≈ 2	Ωm
T_C		≥ 200	°C
density		≈ 4700	kg/m^3

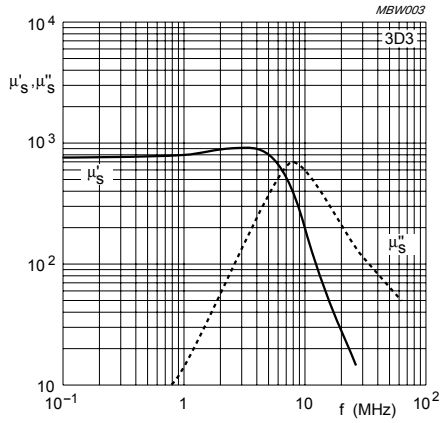

Fig.1 Complex permeability as a function of frequency.

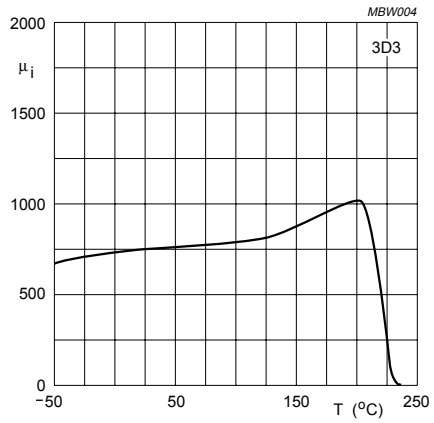

Fig.2 Initial permeability as a function of temperature.

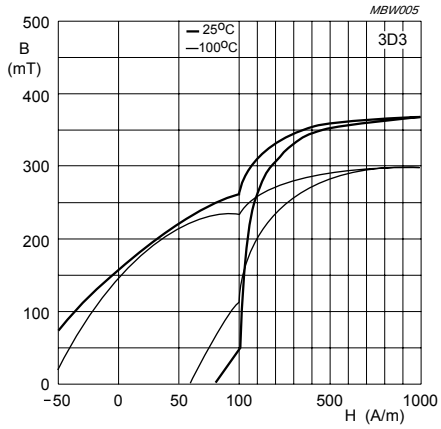

Fig.3 Typical B-H loops.

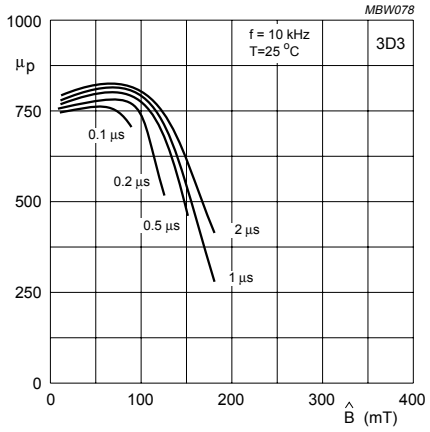

Fig.4 Pulse characteristics (unipolar pulses).

3E25 SPECIFICATIONS

A medium permeability material mainly for use in current compensated chokes in EMI-suppression filters.

SYMBOL	CONDITIONS	VALUE	UNIT
μ_i	25 °C; ≤10 kHz; 0.25 mT	6000 ± 20%	
B	25 °C; 10 kHz; 1200 A/m	≈ 390	mT
	100 °C; 10 kHz; 1200 A/m	≈ 220	
$\tan\delta/\mu_i$	25 °C; 100 kHz; 0.25 mT	$\leq 25 \times 10^{-6}$	
	25 °C; 300 kHz; 0.25 mT	$\leq 200 \times 10^{-6}$	
ρ	DC; 25 °C	≈ 0.5	Ωm
T_C		≥ 125	°C
density		≈ 4900	kg/m^3

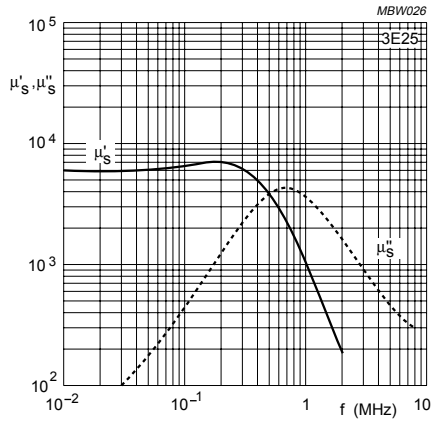

Fig.1 Complex permeability as a function of frequency.

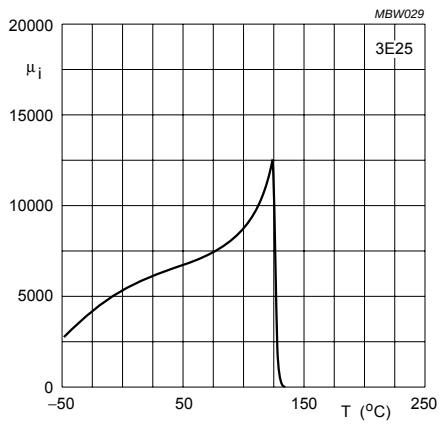

Fig.2 Initial permeability as a function of temperature.

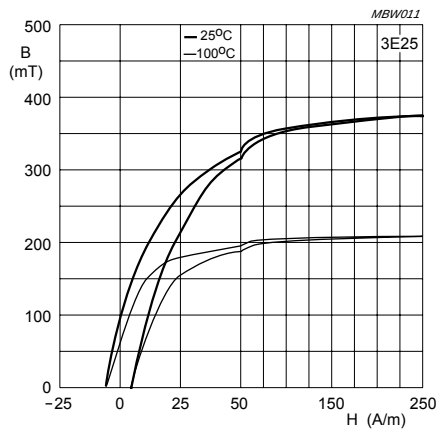

Fig.3 Typical B-H loops.

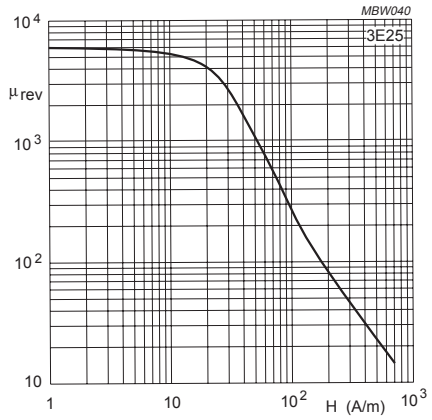

Fig.4 Reversible permeability as a function of magnetic field strength.

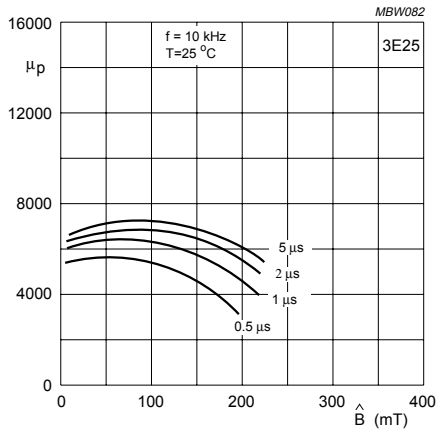

Fig.5 Pulse characteristics (unipolar pulses).

3E26 SPECIFICATIONS

A medium permeability material mainly for use in current compensated chokes in EMI-suppression filters.

SYMBOL	CONDITIONS	VALUE	UNIT
μ_i	25 °C; ≤10 kHz; 0.25 mT	7000 ± 20%	
B	25 °C; 10 kHz; 1200 A/m	≈ 430	mT
	100 °C; 10 kHz; 1200 A/m	≈ 300	
$\tan\delta/\mu_i$	25 °C; 100 kHz; 0.25 mT	$\leq 20 \times 10^{-6}$	
ρ	DC; 25 °C	≈ 0.5	Ωm
T_C		≥ 155	°C
density		≈ 4900	kg/m³

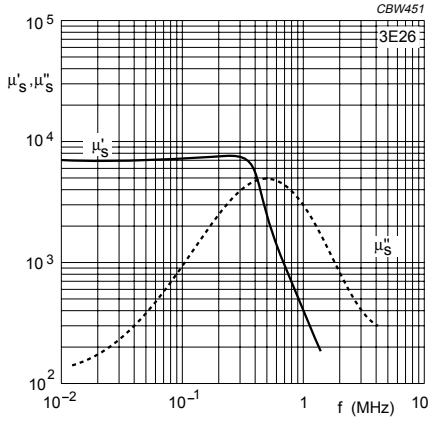

Fig.1 Complex permeability as a function of frequency.

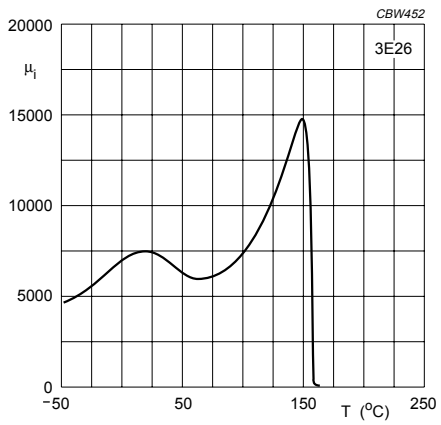

Fig.2 Initial permeability as a function of temperature.

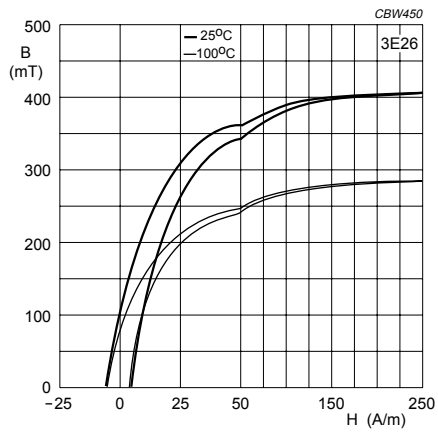

Fig.3 Typical B-H loops.

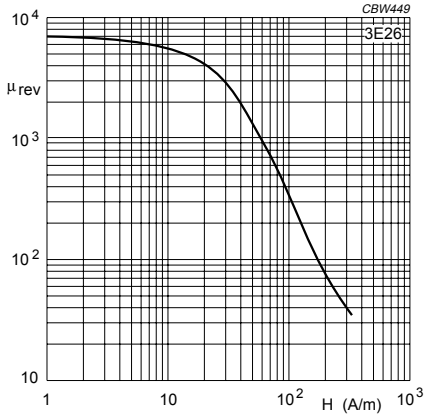

Fig.4 Reversible permeability as a function of magnetic field strength.

3E27 SPECIFICATIONS

A medium permeability material with low losses and a relatively high T_c optimized for use in wideband transformers as well as EMI-suppression filters.

SYMBOL	CONDITIONS	VALUE	UNIT
μ_i	25 °C; ≤10 kHz; 0.25 mT	6000 ± 20%	
B	25 °C; 10 kHz; 1200 A/m	≈ 430	mT
	100 °C; 10 kHz; 1200 A/m	≈ 270	
$\tan\delta/\mu_i$	25 °C; 100 kHz; 0.25 mT	$\leq 15 \times 10^{-6}$	
ρ	DC; 25 °C	≈ 0.5	Ωm
T_C		≥ 150	°C
density		≈ 4800	kg/m³

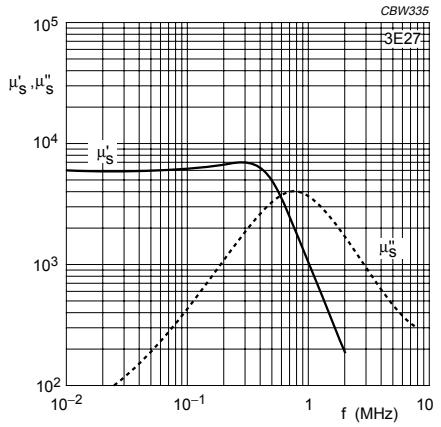

Fig.1 Complex permeability as a function of frequency.

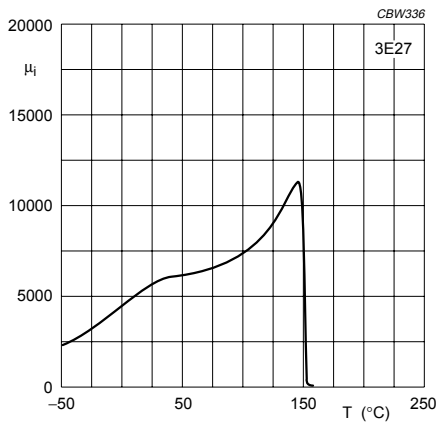

Fig.2 Initial permeability as a function of temperature.

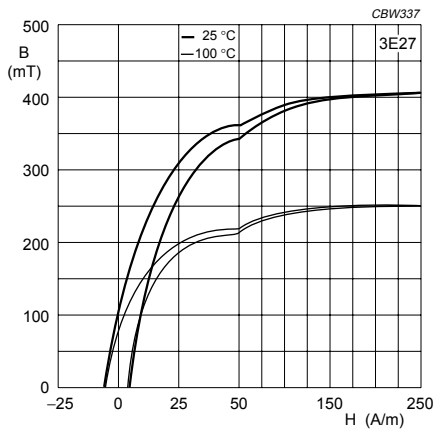

Fig.3 Typical B-H loops.

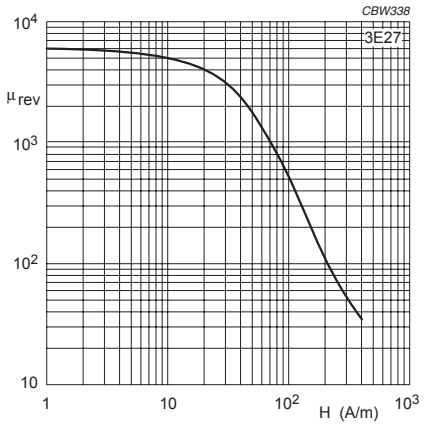

Fig.4 Reversible permeability as a function of magnetic field strength.

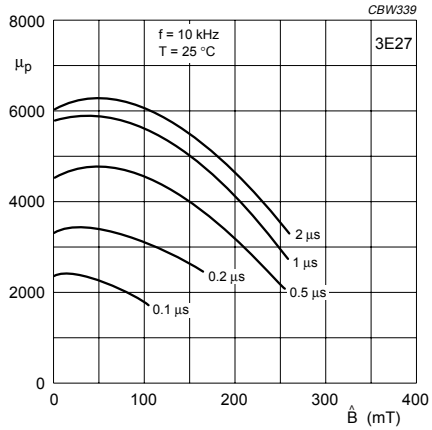

Fig.5 Pulse characteristics (unipolar pulses).

3E28 SPECIFICATIONS

A medium permeability material optimized for use in wideband LAN transformers with a high DC-bias current over a wide temperature range.

SYMBOL	CONDITIONS	VALUE	UNIT
μ_i	25 °C; ≤10 kHz; 0.25 mT	4000 ± 20%	
B	25 °C; 10 kHz; 1200 A/m 100 °C; 10 kHz; 1200 A/m	≈ 440 ≈ 280	mT
$\tan\delta/\mu_i$	25 °C; 100 kHz; 0.25 mT	$\leq 5 \times 10^{-6}$	
ρ	DC; 25 °C	≈ 1	Ωm
T_C		≥ 145	°C
density		≈ 4800	kg/m³

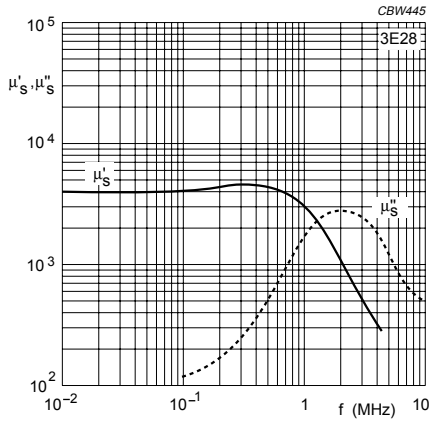

Fig.1 Complex permeability as a function of frequency.

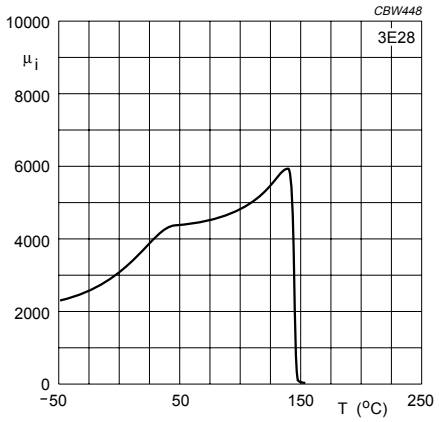

Fig.2 Initial permeability as a function of temperature.

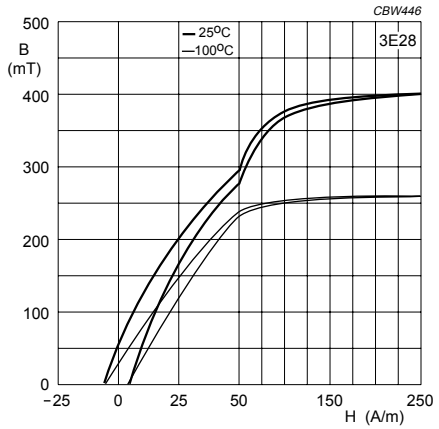

Fig.3 Typical B-H loops.

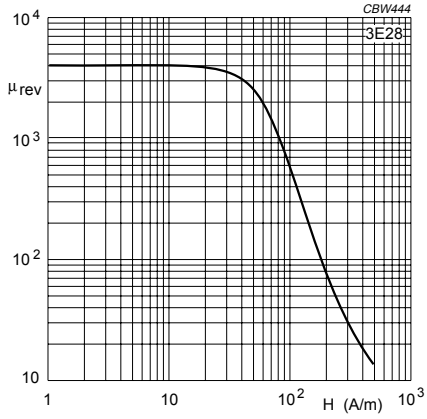

Fig.4 Reversible permeability as a function of magnetic field strength.

3E5 SPECIFICATIONS

A high permeability material optimized for use in wideband transformers as well as EMI-suppression filters.

SYMBOL	CONDITIONS	VALUE	UNIT
μ_i	25 °C; ≤10 kHz; 0.25 mT	10000 ± 20%	
B	25 °C; 10 kHz; 1200 A/m 100 °C; 10 kHz; 1200 A/m	≈ 380 ≈ 230	mT
$\tan\delta/\mu_i$	25 °C; 30 kHz; 0.25 mT 25 °C; 100 kHz; 0.25 mT	$\leq 25 \times 10^{-6}$ $\leq 75 \times 10^{-6}$	
η_B	25 °C; 10 kHz; 1.5 to 3 mT	$\leq 1 \times 10^{-3}$	T^{-1}
ρ	DC; 25 °C	≈ 0.5	Ωm
T_C		≥ 125	°C
density		≈ 4900	kg/m^3

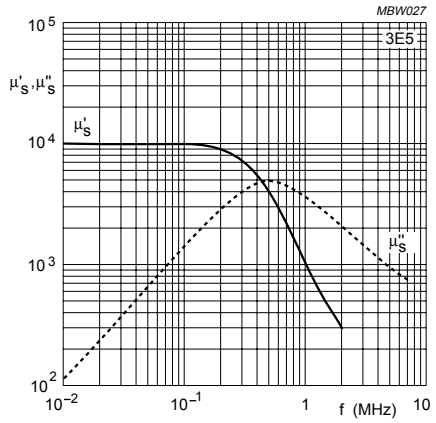

Fig.1 Complex permeability as a function of frequency.

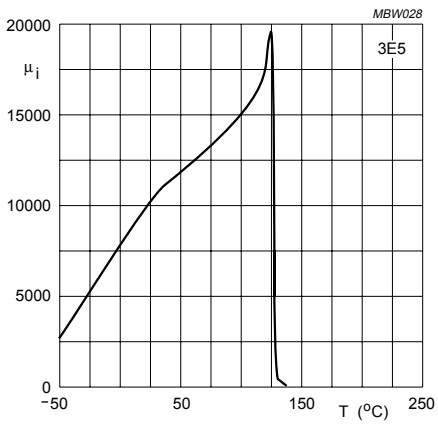

Fig.2 Initial permeability as a function of temperature.

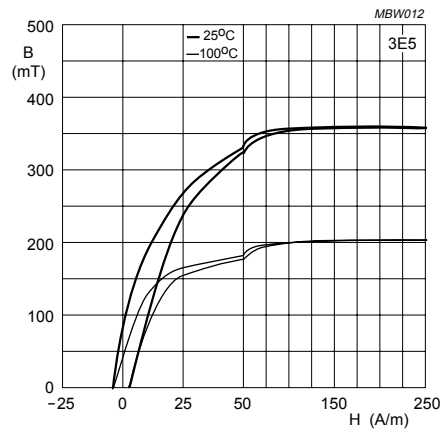

Fig.3 Typical B-H loops.

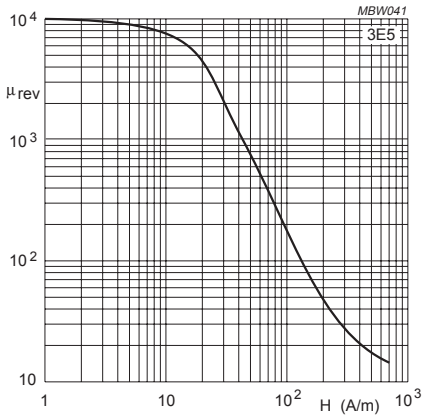

Fig.4 Reversible permeability as a function of magnetic field strength.

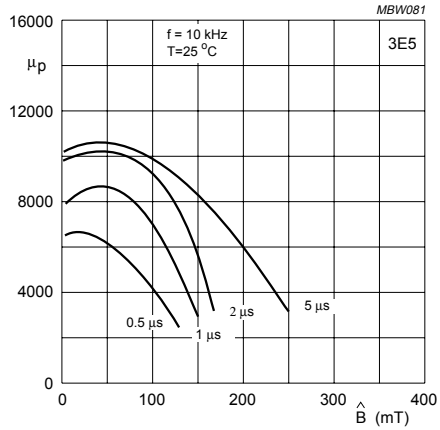

Fig.5 Pulse characteristics (unipolar pulses).

3E55 SPECIFICATIONS

A high permeability material optimized for a very low Total Harmonic Distortion factor (THD/μ_a) over the full operating temperature range of DSL wideband transformers.

SYMBOL	CONDITIONS	VALUE	UNIT
μ_i	25 °C; ≤10 kHz; 0.25 mT	10000 ± 20%	
B	25 °C; 10 kHz; 1200 A/m 80 °C; 10 kHz; 1200 A/m	≈ 370 ≈ 220	mT
tanδ/μ_i	25 °C; 10 kHz; 0.25 mT 25 °C; 30 kHz; 0.25 mT	$\leq 10 \times 10^{-6}$ $\leq 30 \times 10^{-6}$	
η_B	25 °C; 10 kHz; 1.5 to 3 mT	$\leq 0.2 \times 10^{-3}$	T^{-1}
ρ	DC; 25 °C	≈ 0.1	Ωm
T_C		≥ 100	°C
density		≈ 5000	kg/m^3

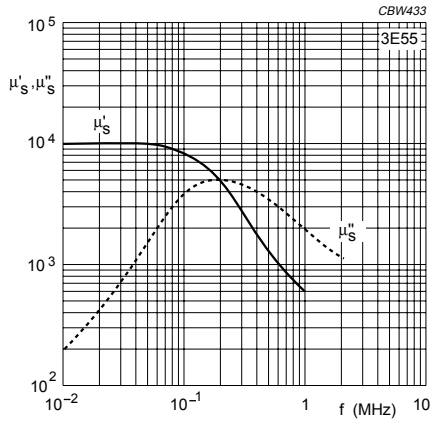

Fig.1 Complex permeability as a function of frequency.

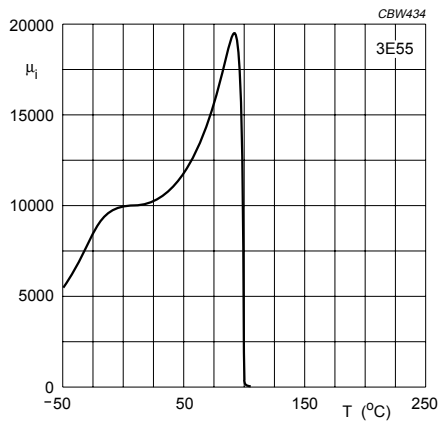

Fig.2 Initial permeability as a function of temperature.

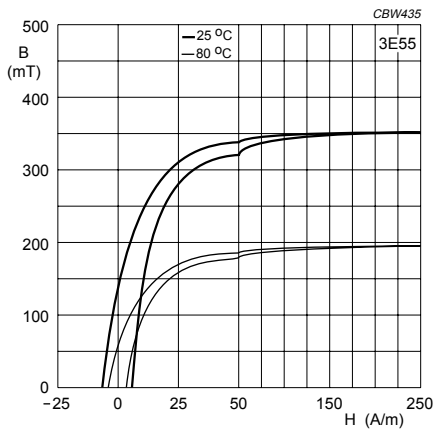

Fig.3 Typical B-H loops.

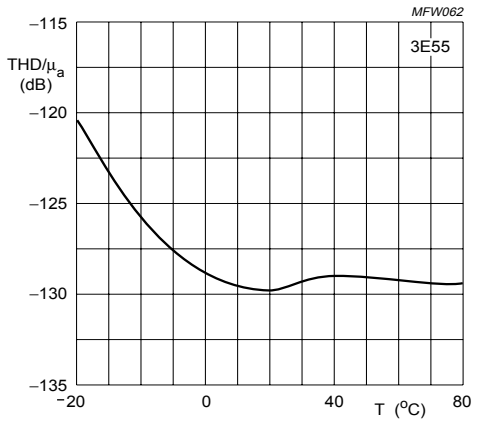

Fig.4 THD-factor as a function of temperature
(B =10 mT, f = 25 kHz).

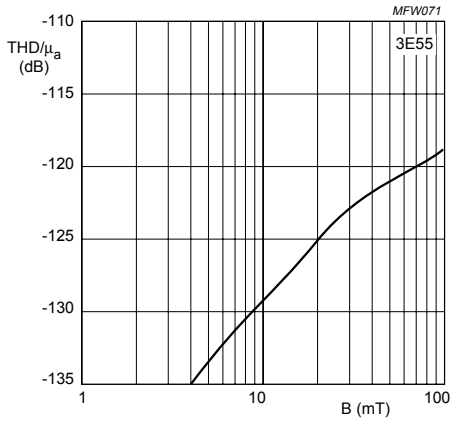

Fig.5 THD-factor as a function of flux density
(f = 25 kHz, T = 25 °C).

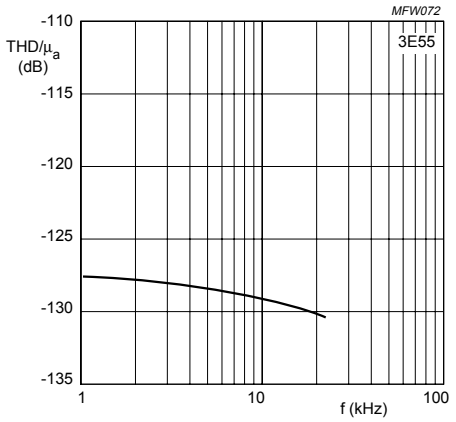

Fig.6 THD-factor as a function of frequency
(B =10 mT, T = 25 °C).

3E6 SPECIFICATIONS

A high permeability material optimized for use in wideband transformers as well as EMI-suppression filters.

	CONDITIONS	VALUE(1)	UNIT
μ_i	25 °C; ≤10 kHz; 0.25 mT	12000 ± 20%	
B	25 °C; 10 kHz; 1200 A/m 100 °C; 10 kHz; 1200 A/m	≈ 390 ≈ 220	mT
$\tan\delta/\mu_i$	25 °C; 10 kHz; 0.25 mT 25 °C; 30 kHz; 0.25 mT	$\leq 10 \times 10^{-6}$ $\leq 30 \times 10^{-6}$	
η_B	25 °C; 10 kHz; 1.5 to 3 mT	$\leq 1 \times 10^{-3}$	T^{-1}
ρ	DC; 25 °C	≈ 0.1	Ωm
T_C		≥ 130	°C
density		≈ 4900	kg/m^3

Note

1. Measured on sintered, non-ground ring cores of dimensions Ø14 × Ø9 × 5 which are not subjected to external stresses.

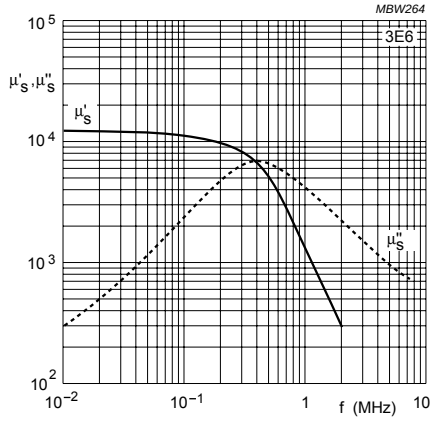

Fig.1 Complex permeability as a function of frequency.

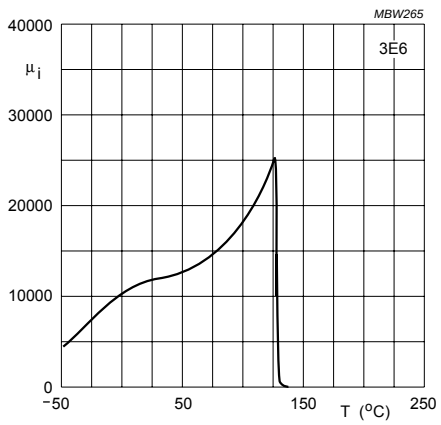

Fig.2 Initial permeability as a function of temperature.

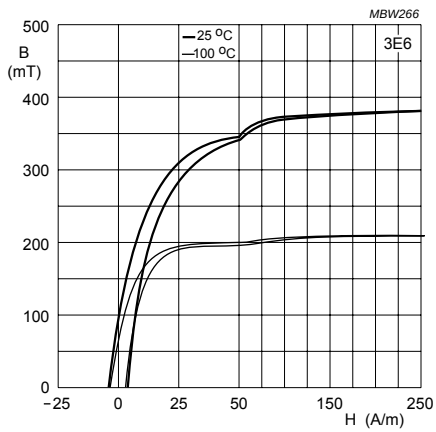

Fig.3 Typical B-H loops.

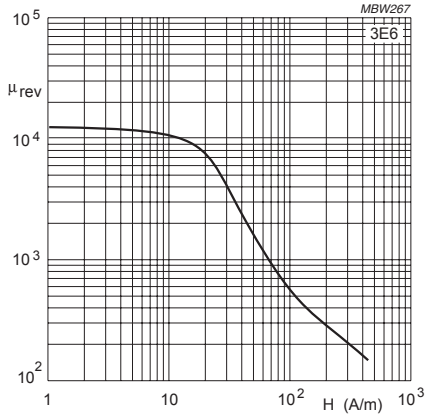

Fig.4 Reversible permeability as a function of magnetic field strength.

3E7 SPECIFICATIONS

A high permeability material optimized for use in wideband transformers where small size or a low number of turns are important design parameters.

	CONDITIONS	VALUE(1)	UNIT
μ_i	25 °C; ≤10 kHz; 0.25 mT	15000 ± 20%	
B	25 °C; 10 kHz; 1200 A/m 100 °C; 10 kHz; 1200 A/m	≈ 390 ≈ 220	mT
$\tan\delta/\mu_i$	25 °C; 10 kHz; 0.25 mT 25 °C; 30 kHz; 0.25 mT	$\leq 10 \times 10^{-6}$ $\leq 30 \times 10^{-6}$	
η_B	25 °C; 10 kHz; 1.5 to 3 mT	$\leq 1 \times 10^{-3}$	T^{-1}
ρ	DC; 25 °C	≈ 0.1	Ωm
T_C		≥ 130	°C
density		≈ 4900	kg/m^3

Note

1. Measured on sintered, non-ground ring cores of dimensions Ø14 × Ø9 × 5 which are not subjected to external stresses.

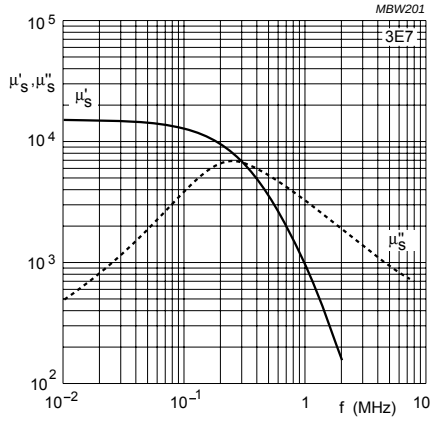

Fig.1 Complex permeability as a function of frequency.

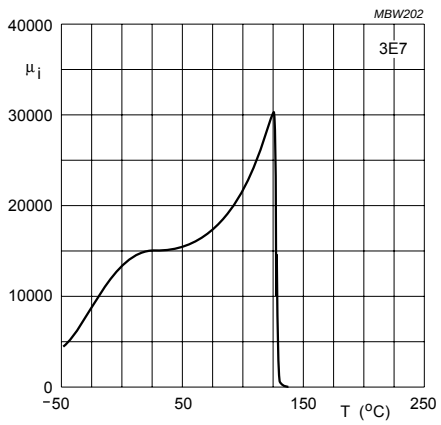

Fig.2 Initial permeability as a function of temperature.

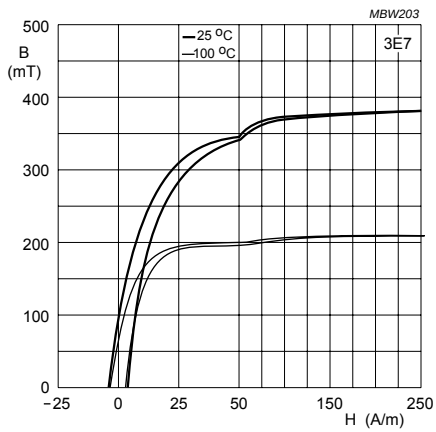

Fig.3 Typical B-H loops.

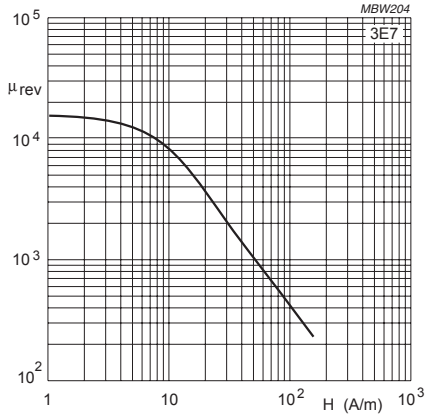

Fig.4 Reversible permeability as a function of magnetic field strength.

3E8 SPECIFICATIONS

A high permeability material optimized for use in wideband transformers and delay lines where small size or a low number of turns are important design parameters.

	CONDITIONS	VALUE(1)	UNIT
μ_i	25 °C; ≤10 kHz;0.25 mT	18000 ± 20%	
B	25 °C; 10 kHz; 1200 A/m 80 °C; 10 kHz; 1200 A/m	≈ 380 ≈ 210	mT
$\tan\delta/\mu_i$	25 °C; 10 kHz; 0.25 mT 25 °C; 30 kHz; 0.25 mT	$\leq 10 \times 10^{-6}$ $\leq 30 \times 10^{-6}$	
η_B	25 °C; 10 kHz; 1.5 to 3 mT	$\leq 1 \times 10^{-3}$	T^{-1}
ρ	DC; 25 °C	≈ 0.1	Ωm
T_C		≥ 100	°C
density		≈ 5000	kg/m^3

Note

1. Measured on sintered, non-ground ring cores of dimensions Ø14 × Ø9 × 5 which are not subjected to external stresses.

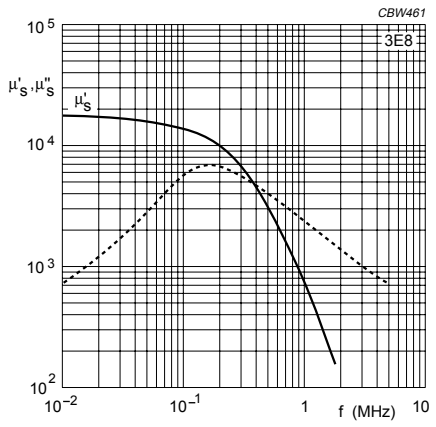

Fig.1 Complex permeability as a function of frequency.

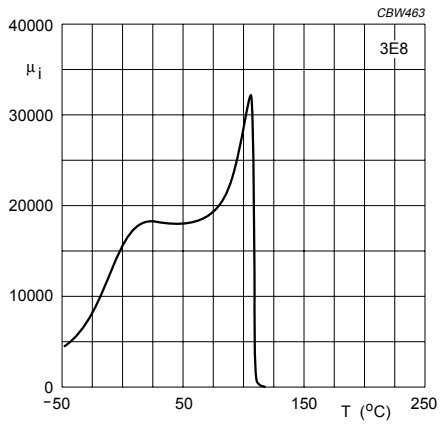

Fig.2 Initial permeability as a function of temperature.

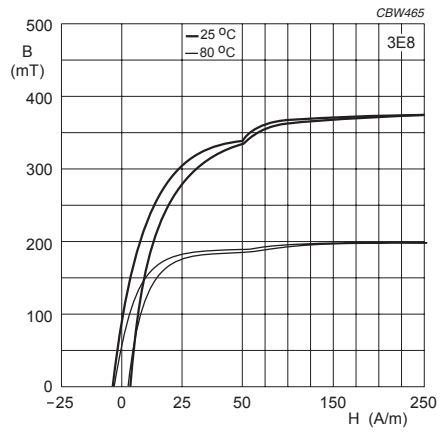

Fig.3 Typical B-H loops.

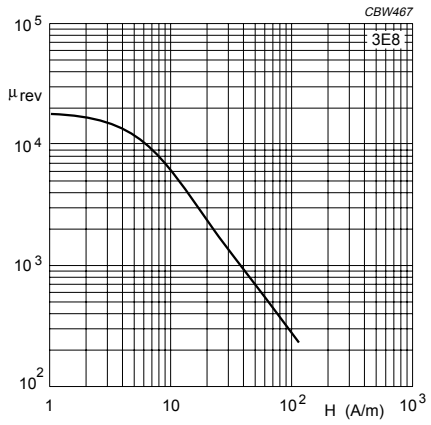

Fig.4 Reversible permeability as a function of magnetic field strength.

3E9 SPECIFICATIONS

A high permeability material optimized for small toroids used in miniaturized wideband transformers and delay lines.

	CONDITIONS	VALUE(1)	UNIT
μ_i	25 °C; ≤10 kHz; 0.25 mT	20000 ± 20%	
B	25 °C; 10 kHz; 1200 A/m 80 °C; 10 kHz; 1200 A/m	≈ 380 ≈ 210	mT
$\tan\delta/\mu_i$	25 °C; 10 kHz; 0.25 mT 25 °C; 30 kHz; 0.25 mT	$\leq 10 \times 10^{-6}$ $\leq 50 \times 10^{-6}$	
η_B	25 °C; 10 kHz; 1.5 to 3 mT	$\leq 1 \times 10^{-3}$	T^{-1}
ρ	DC; 25 °C	≈ 0.1	Ωm
T_C		≥ 100	°C
density		≈ 5000	kg/m^3

Note

1. Measured on sintered, non-ground ring cores of dimensions Ø14 × Ø9 × 5 which are not subjected to external stresses.

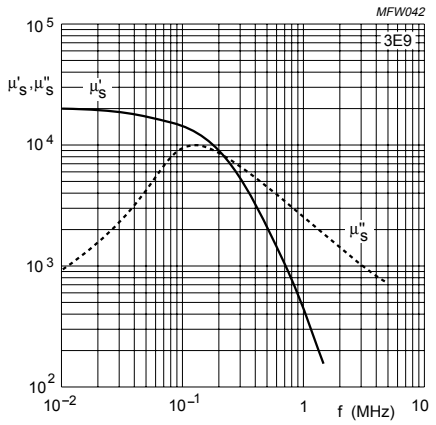

Fig.1 Complex permeability as a function of frequency.

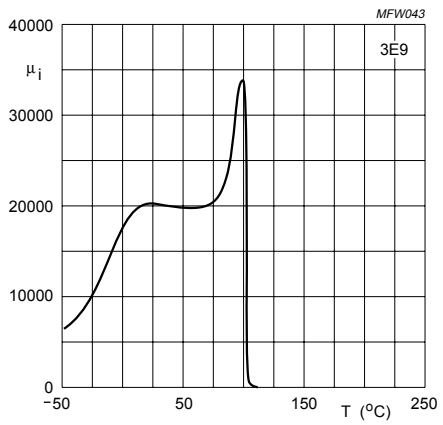

Fig.2 Initial permeability as a function of temperature.

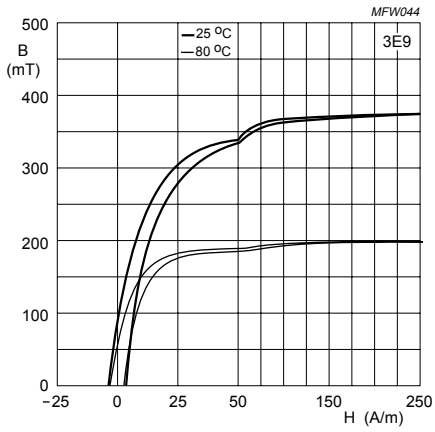

Fig.3 Typical B-H loops.

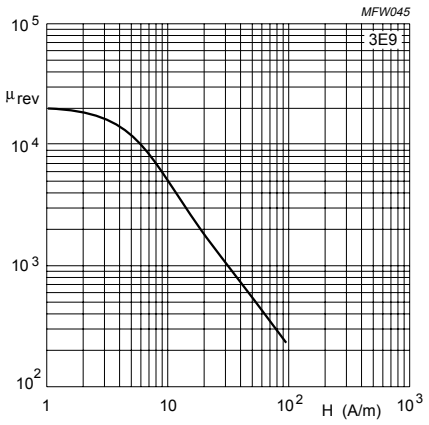

Fig.4 Reversible permeability as a function of magnetic field strength.

3F3 SPECIFICATIONS

A medium frequency power material for use in power and general purpose transformers at frequencies of 0.2 - 0.5 MHz.

SYMBOL	CONDITIONS	VALUE	UNIT
μ_i	25 °C; ≤10 kHz; 0.25 mT	2000 ±20%	
μ_a	100 °C; 25 kHz; 200 mT	≈ 4000	
B	25 °C; 10 kHz; 1200 A/m	≈ 440	mT
	100 °C; 10 kHz; 1200 A/m	≈ 370	
P_V	100 °C; 100 kHz; 100 mT	≤80	kW/m^3
	100 °C; 400 kHz; 50 mT	≤150	
ρ	DC; 25 °C	≈ 2	Ωm
T_C		≥200	°C
density		≈ 4750	kg/m^3

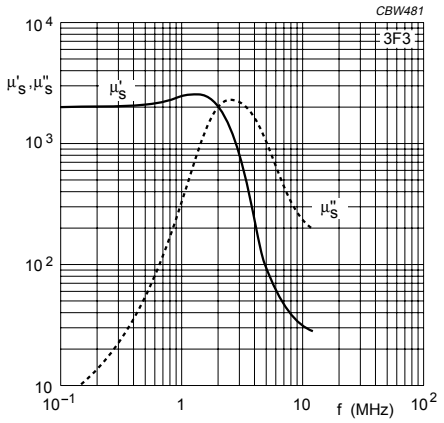

Fig.1 Complex permeability as a function of frequency.

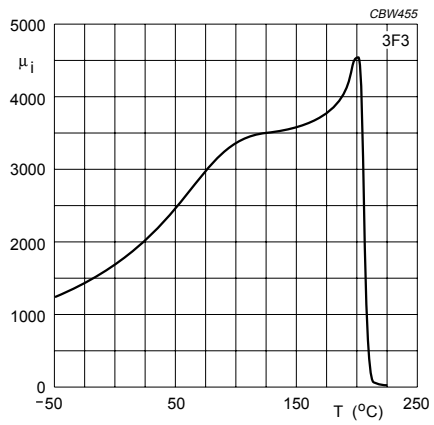

Fig.2 Initial permeability as a function of temperature.

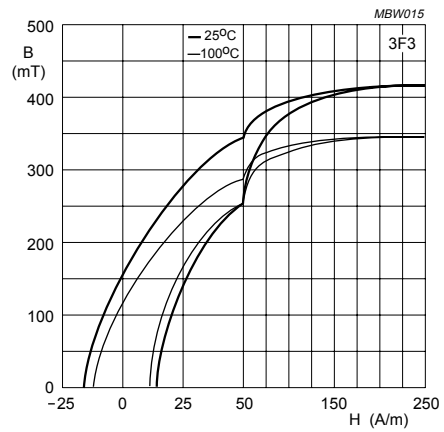

Fig.3 Typical B-H loops.

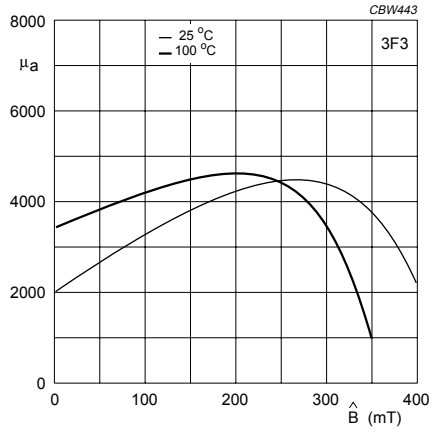

Fig.4 Amplitude permeability as function of peak flux density.

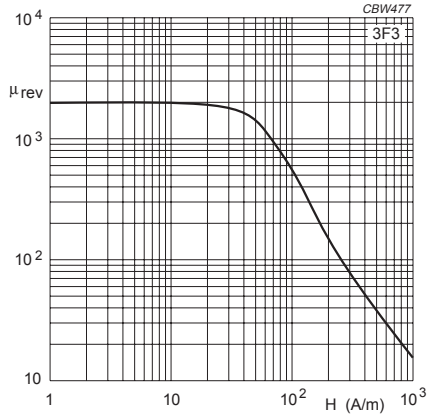

Fig.5 Reversible permeability as a function of magnetic field strength.

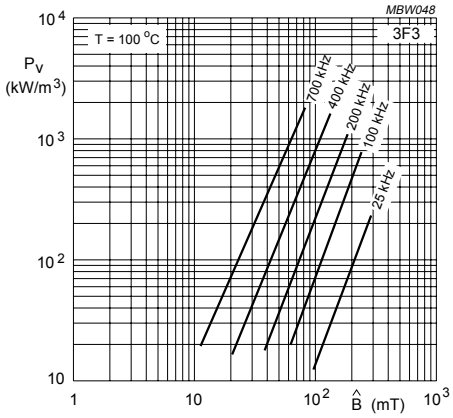

Fig.6 Specific power loss as a function of peak flux density with frequency as a parameter.

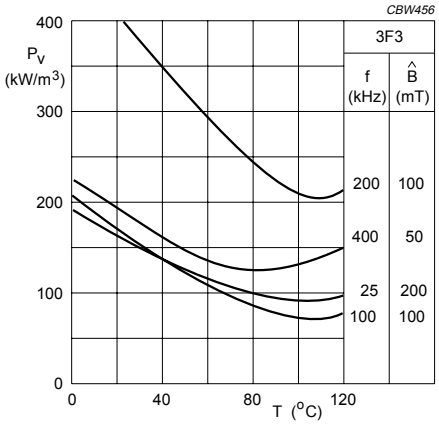

Fig.7 Specific power loss for several frequency/flux density combinations as a function of temperature.

3F31 SPECIFICATIONS

A medium frequency power material for use in power and general purpose transformers at frequencies of 0.2 - 0.5 MHz.

SYMBOL	CONDITIONS	VALUE	UNIT
μ_i	25 °C; ≤10 kHz; 0.25 mT	1800 ± 20%	
μ_a	100 °C; 25 kHz; 200 mT	≥3800	
B	25 °C; 10 kHz; 1200 A/m 100 °C; 10 kHz; 1200 A/m	≥520 ≥420	mT
P_V	100 °C; 400 kHz; 50 mT 100 °C; 500 kHz; 50 mT	≤80 ≤175	kW/m³
ρ	DC; 25 °C	≥8	Ωm
T_C		≥230	°C
density		≥4750	kg/m³

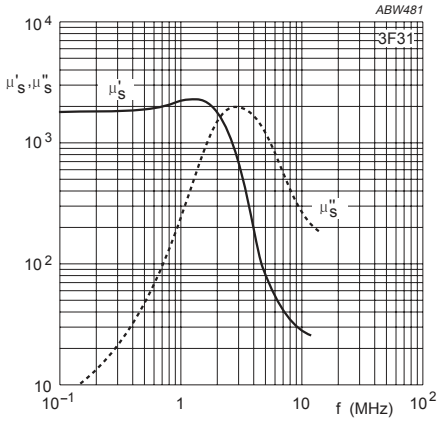

Fig.1 Complex permeability as a function of frequency.

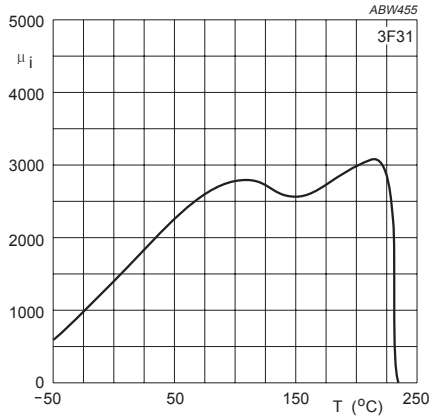

Fig.2 Initial permeability as a function of temperature.

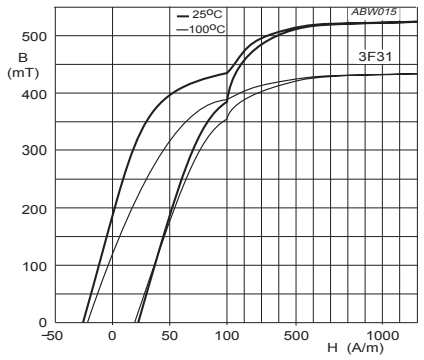

Fig.3 Typical B-H loops.

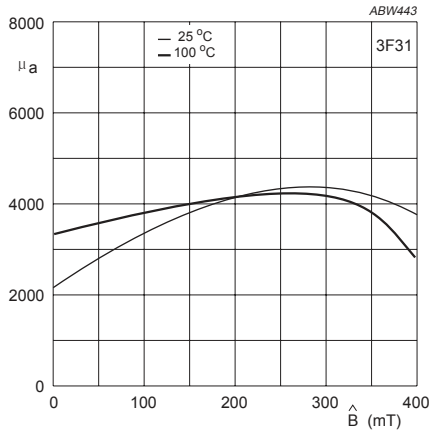

Fig.4 Amplitude permeability as function of peak flux density.

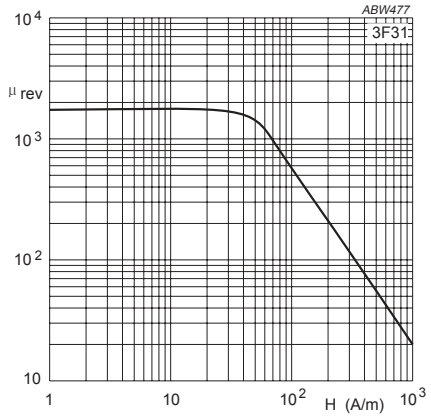

Fig.5 Reversible permeability as a function of magnetic field strength.

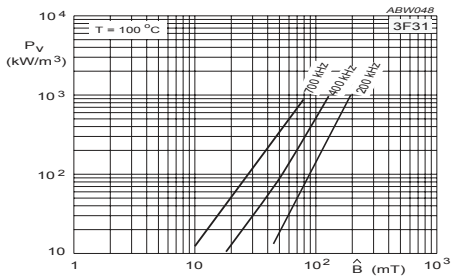

Fig.6 Specific power loss as a function of peak flux density with frequency as a parameter.

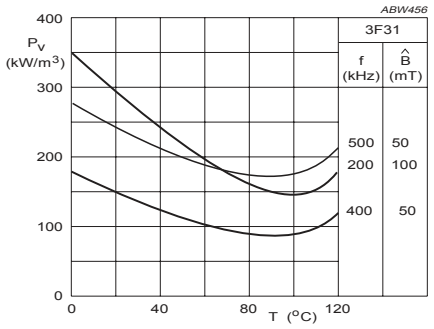

Fig.7 Specific power loss for several frequency/flux density combinations as a function of temperature.

DATA SHEET STATUS DEFINITIONS

DATA SHEET STATUS	PRODUCT STATUS	DEFINITIONS
Preliminary specification	Development	This data sheet contains preliminary data. Ferroxcube reserves the right to make changes at any time without notice in order to improve design and supply the best possible product.
Product specification	Production	This data sheet contains final specifications. Ferroxcube reserves the right to make changes at any time without notice in order to improve design and supply the best possible product.

DISCLAIMER

Life support applications ☒ These products are not designed for use in life support appliances, devices, or systems where malfunction of these products can reasonably be expected to result in personal injury. Ferroxcube customers using or selling these products for use in such applications do so at their own risk and agree to fully indemnify Ferroxcube for any damages resulting from such application.

PRODUCT STATUS DEFINITIONS

STATUS	INDICATION	DEFINITION
Prototype	prot	These are products that have been made as development samples for the purposes of technical evaluation only. The data for these types is provisional and is subject to change.
Design-in	des	These products are recommended for new designs.
Preferred		These products are recommended for use in current designs and are available via our sales channels.
Support	sup	These products are **not** recommended for new designs and may not be available through all of our sales channels. Customers are advised to check for availability.

3F35 SPECIFICATIONS

A medium to high frequency power material for use in power and general purpose transformers at frequencies of 0.5 - 1 MHz.

	CONDITIONS	VALUE	UNIT
μ_i	25 °C; ≤10 kHz; 0.25 mT	1400 ±20%	
μ_a	100 °C; 25 kHz; 200 mT	≈ 2400	
B	25 °C; 10 kHz; 1200 A/m	≈ 500	mT
	100 °C; 10 kHz; 1200 A/m	≈ 420	
P_v	100 °C; 400 kHz; 50 mT	≈ 60	kW/m^3
	100 °C; 500 kHz; 50 mT	≈ 90	
	100 °C; 500 kHz; 100 mT	≈ 700	
ρ	DC; 25 °C	≈ 10	Ωm
T_C		≥ 240	°C
density		≈ 4750	kg/m^3

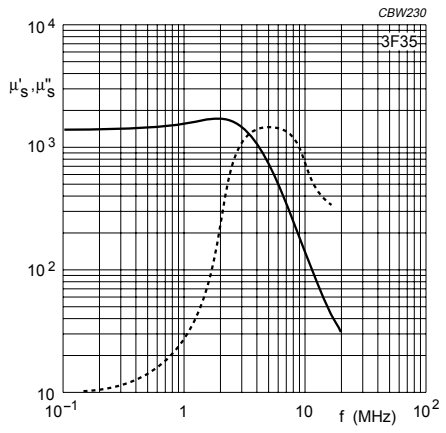

Fig.1 Complex permeability as a function of frequency.

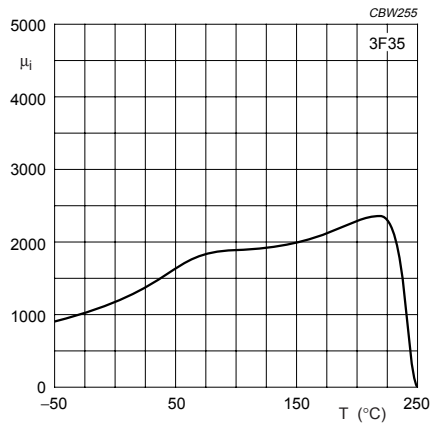

Fig.2 Initial permeability as a function of temperature.

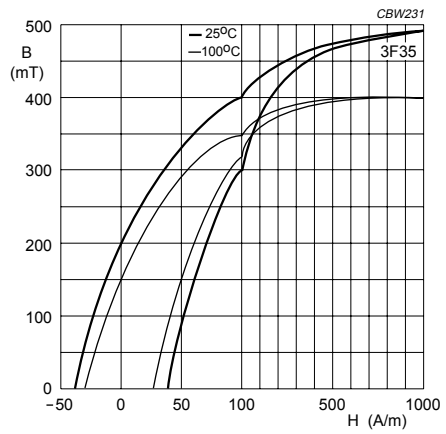

Fig.3 Typical B-H loops.

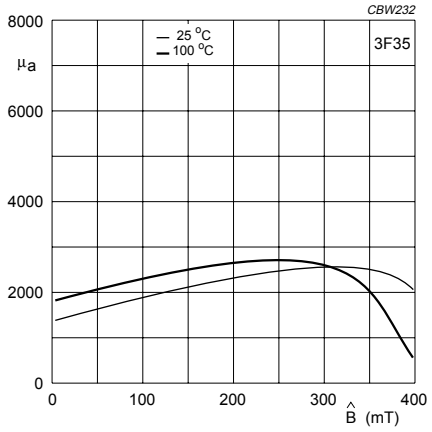

Fig.4 Amplitude permeability as function of peak flux density.

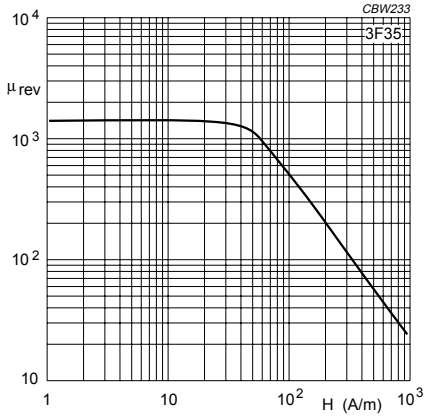

Fig.5 Reversible permeability as a function of magnetic field strength.

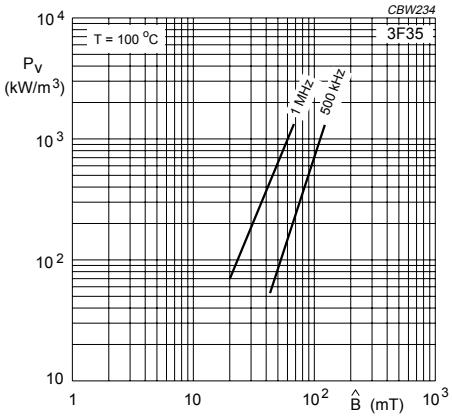

Fig.6 Specific power loss as a function of peak flux density with frequency as a parameter.

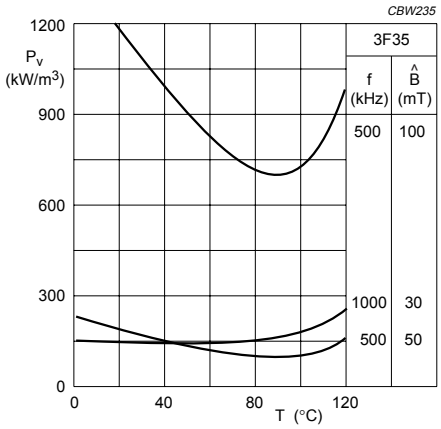

Fig.7 Specific power loss for several frequency/flux density combinations as a function of temperature.

3F36 SPECIFICATIONS

A medium to high frequency power material for use in power and general purpose transformers at frequencies of 0.5 - 1 MHz. Low power losses from 25 to 100 ˚C. Especially suited for broad temperature range applications like automotive, lighting and mobile handheld.

	CONDITIONS	VALUE	UNIT
μ_i	25 ˚C; ⊠10 kHz; 0.25 mT	1600 ± 20%	
μ_a	100 ˚C; 25 kHz; 200 mT	⊠2400	
B	25 ˚C; 10 kHz; 1200 A/m	⊠520	mT
	100 ˚C; 10 kHz; 1200 A/m	⊠420	
P_v	100 ˚C; 500 kHz; 50 mT	⊠90	kW/m^3
	25 ˚C; 500 kHz; 100 mT	⊠700	
	100 ˚C; 500 kHz; 100 mT	⊠700	
ρ	DC; 25 ˚C	⊠12	⊠m
T_C		⊠230	˚C
density		⊠4750	kg/m^3

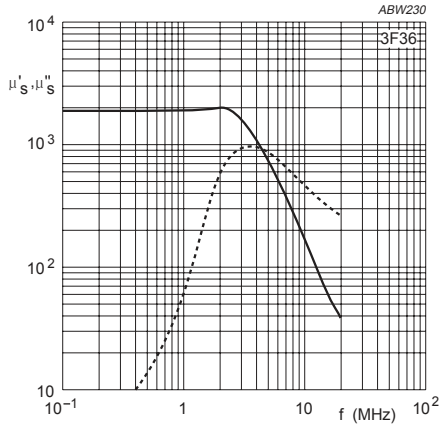

Fig.1 Complex permeability as a function of frequency.

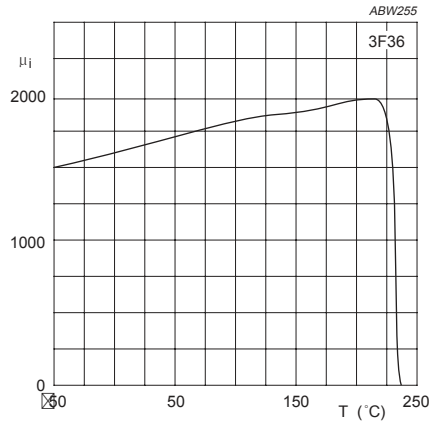

Fig.2 Initial permeability as a function of temperature.

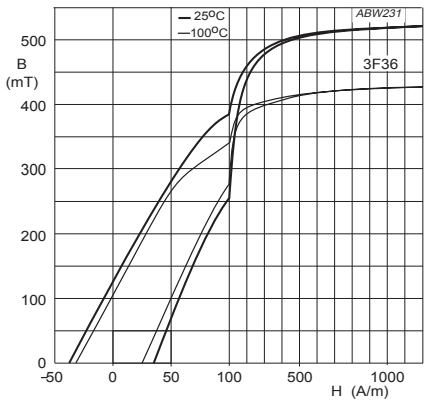

Fig.3 Typical B-H loops.

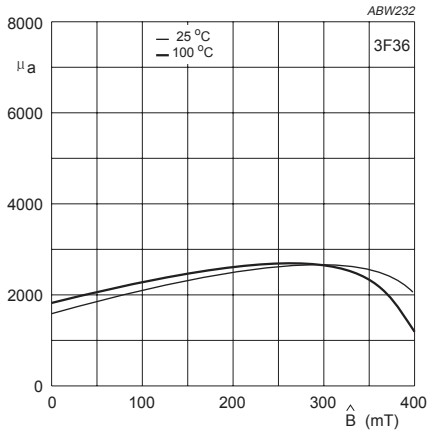

Fig.4 Amplitude permeability as function of peak flux density.

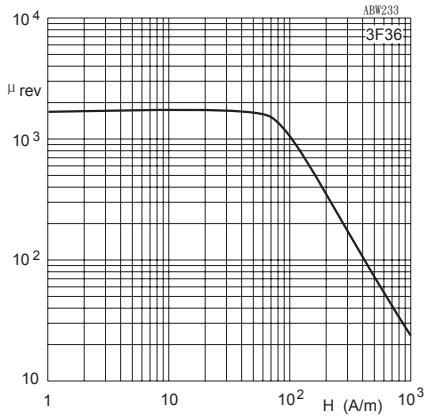

Fig.5 Reversible permeability as a function of magnetic field strength.

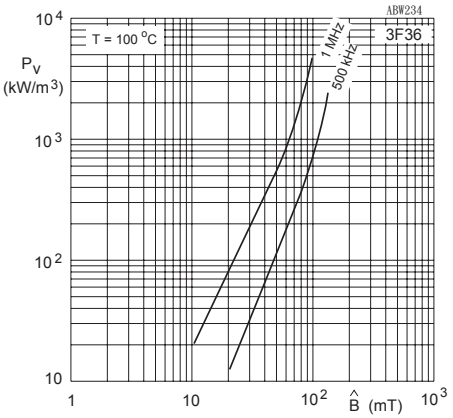

Fig.6 Specific power loss as a function of peak flux density with frequency as a parameter.

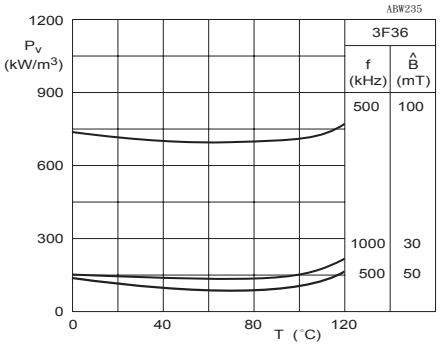

Fig.7 Specific power loss for several frequency/flux density combinations as a function of temperature.

DATA SHEET STATUS DEFINITIONS

DATA SHEET STATUS	PRODUCT STATUS	DEFINITIONS
Preliminary specification	Development	This data sheet contains preliminary data. Ferroxcube reserves the right to make changes at any time without notice in order to improve design and supply the best possible product.
Product specification	Production	This data sheet contains final specifications. Ferroxcube reserves the right to make changes at any time without notice in order to improve design and supply the best possible product.

DISCLAIMER

Life support applications ☒ These products are not designed for use in life support appliances, devices, or systems where malfunction of these products can reasonably be expected to result in personal injury. Ferroxcube customers using or selling these products for use in such applications do so at their own risk and agree to fully indemnify Ferroxcube for any damages resulting from such application.

PRODUCT STATUS DEFINITIONS

STATUS	INDICATION	DEFINITION
Prototype	prot	These are products that have been made as development samples for the purposes of technical evaluation only. The data for these types is provisional and is subject to change.
Design-in	des	These products are recommended for new designs.
Preferred		These products are recommended for use in current designs and are available via our sales channels.
Support	sup	These products are **not** recommended for new designs and may not be available through all of our sales channels. Customers are advised to check for availability.

3F4 SPECIFICATIONS

A high frequency power material for use in power and general purpose transformers at frequencies of 1 - 2 MHz.

SYMBOL	CONDITIONS	VALUE	UNIT
μ_i	25 °C; ≤10 kHz; 0.25 mT	900 ±20%	
μ_a	100 °C; 25 kHz; 200 mT	≈ 1700	
B	25 °C; 10 kHz; 1200 A/m	≈ 410	mT
	100 °C; 10 kHz; 1200 A/m	≈ 350	
P_V	100 °C; 1 MHz; 30 mT	≈ 130	kW/m^3
	100 °C; 3 MHz; 10 mT	≈ 220	
ρ	DC; 25 °C	≈ 10	Ωm
T_C		≥ 220	°C
density		≈ 4700	kg/m^3

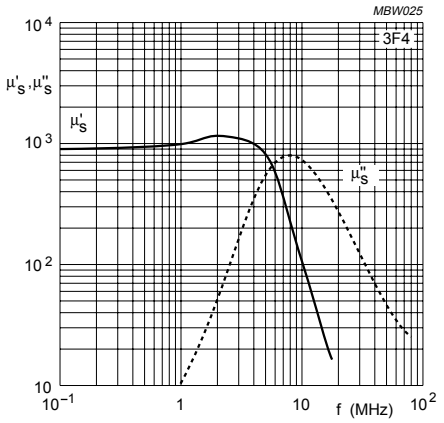

Fig.1 Complex permeability as a function of frequency.

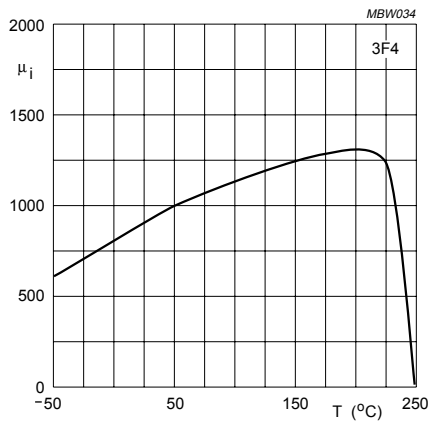

Fig.2 Initial permeability as a function of temperature.

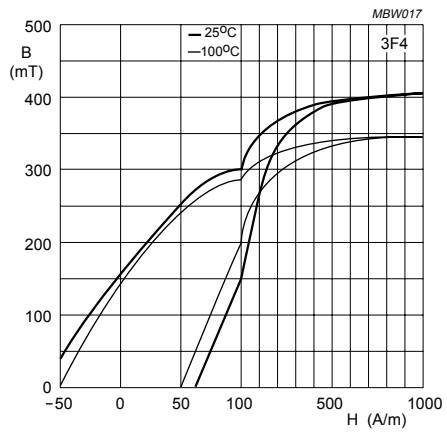

Fig.3 Typical B-H loops.

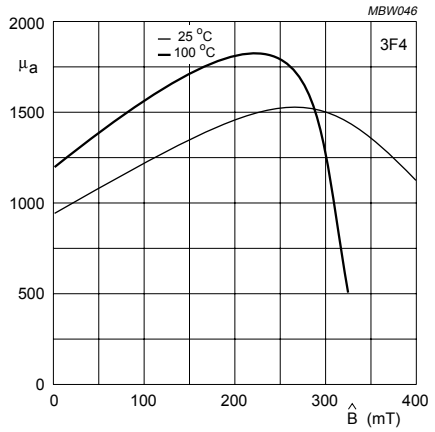

Fig.4 Amplitude permeability as function of peak flux density.

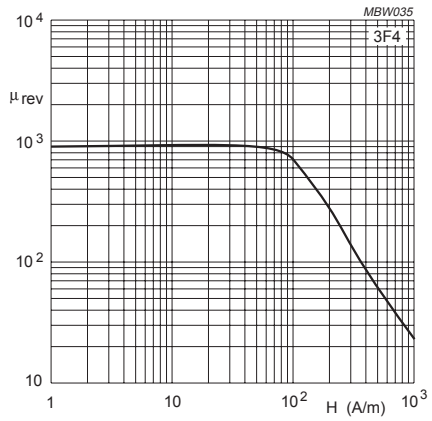

Fig.5 Reversible permeability as a function of magnetic field strength.

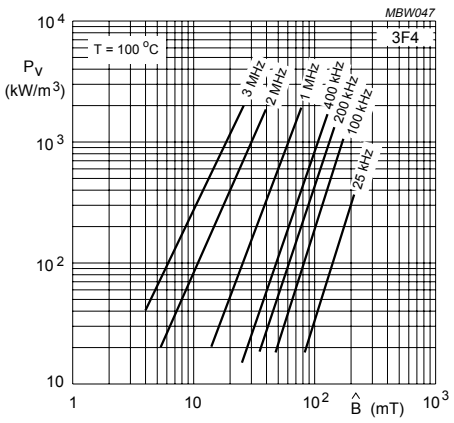

Fig.6 Specific power loss as a function of peak flux density with frequency as a parameter.

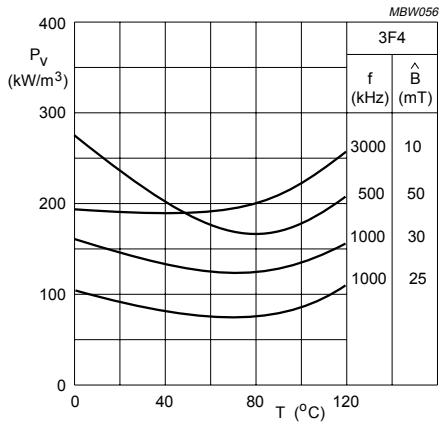

Fig.7 Specific power loss for several frequency/flux density combinations as a function of temperature.

3F45 SPECIFICATIONS

A high frequency power material for use in power and general purpose transformers at frequencies of 1 - 2 MHz.

SYMBOL	CONDITIONS	VALUE	UNIT
μ_i	25 °C; ≤10 kHz; 0.25 mT	900 ±20%	
μ_a	100 °C; 25 kHz; 200 mT	≈ 1700	
B	25 °C; 10 kHz; 1200 A/m	≈ 420	mT
	100 °C; 10 kHz; 1200 A/m	≈ 370	
P_V	100 °C; 1 MHz; 30 mT	≈ 80	kW/m^3
	100 °C; 1 MHz; 50 mT	≈ 300	
	100 °C; 3 MHz; 10 mT	≈ 150	
ρ	DC; 25 °C	≈ 10	Ωm
T_C		≥ 300	°C
density		≈ 4800	kg/m^3

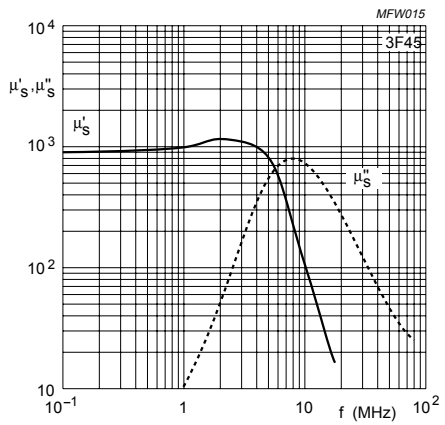

Fig.1 Complex permeability as a function of frequency.

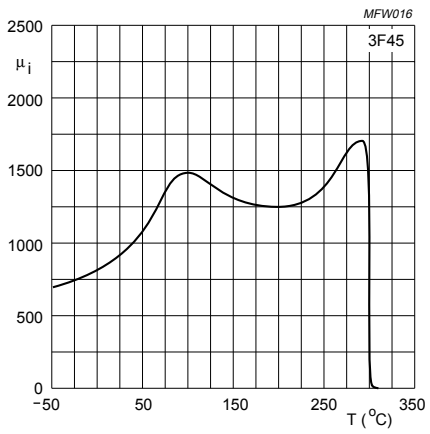

Fig.2 Initial permeability as a function of temperature.

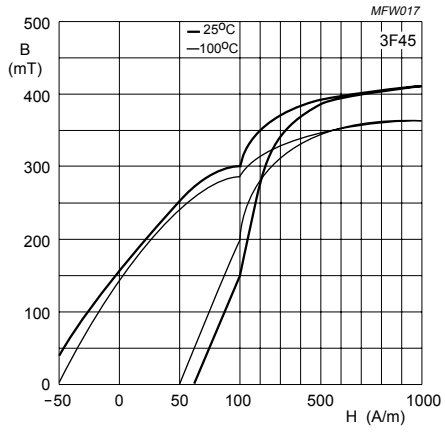

Fig.3 Typical B-H loops.

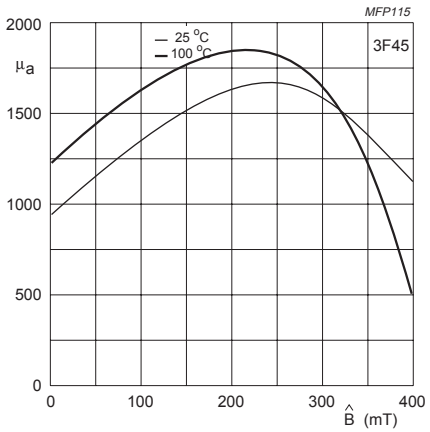

Fig.4 Amplitude permeability as function of peak flux density.

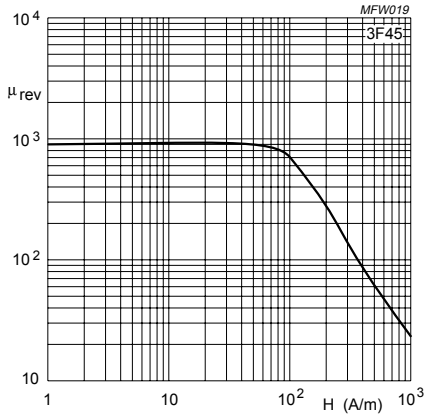

Fig.5 Reversible permeability as a function of magnetic field strength.

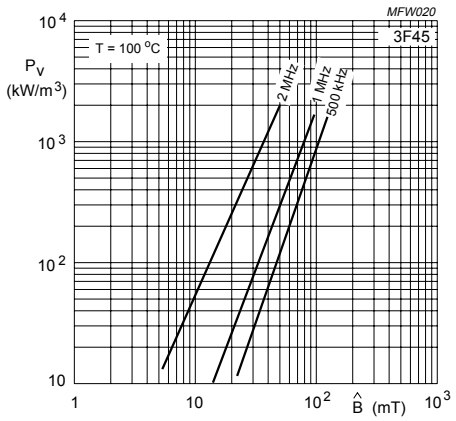

Fig.6 Specific power loss as a function of peak flux density with frequency as a parameter.

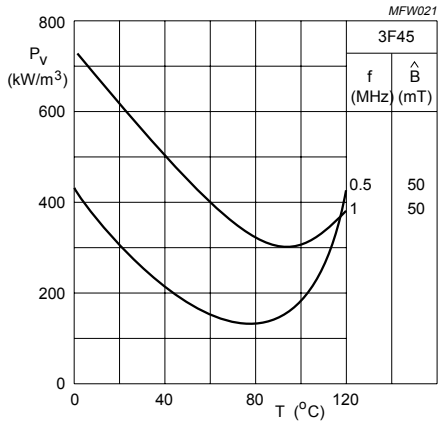

Fig.7 Specific power loss for several frequency/flux density combinations as a function of temperature.

3F5 SPECIFICATIONS

A very high frequency power material for use in power and general purpose transformers optimized for frequencies of 2 - 4 MHz.

SYMBOL	CONDITIONS	VALUE	UNIT
μ_i	25 °C; ≤10 kHz; 0.25 mT	650 ±20%	
μ_a	100 °C; 25 kHz; 200 mT	≈ 1000	
B	25 °C; 10 kHz; 1200 A/m	≈ 380	mT
	100 °C; 10 kHz; 1200 A/m	≈ 340	
P_V	100 °C; 3 MHz; 10 mT	≈ 100	kW/m^3
	100 °C; 3 MHz; 30 mT	≈ 900	
ρ	DC; 25 °C	≈ 10	Ωm
T_C		≥ 300	°C
density		≈ 4750	kg/m^3

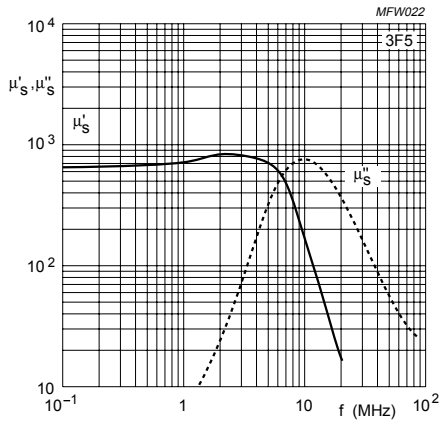

Fig.1 Complex permeability as a function of frequency.

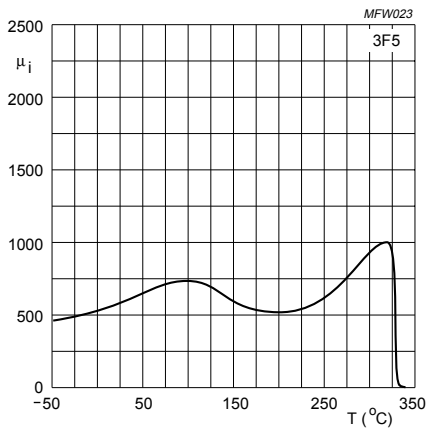

Fig.2 Initial permeability as a function of temperature.

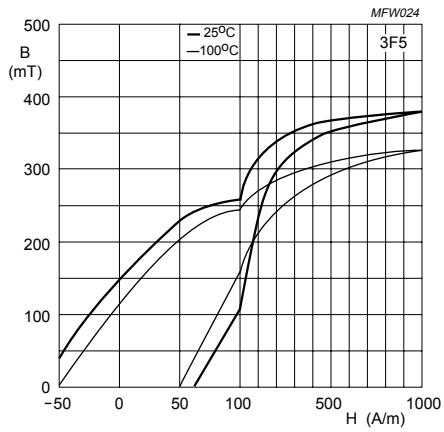

Fig.3 Typical B-H loops.

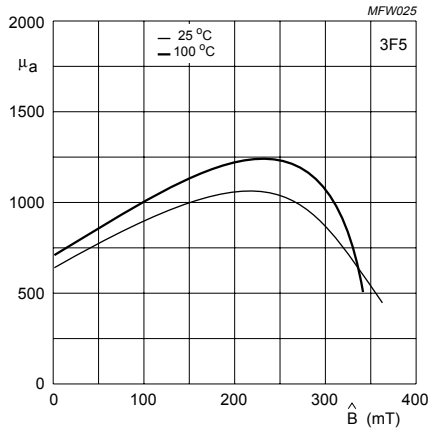

Fig.4 Amplitude permeability as function of peak flux density.

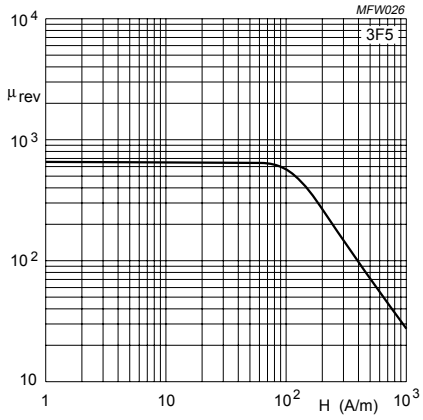

Fig.5 Reversible permeability as a function of magnetic field strength.

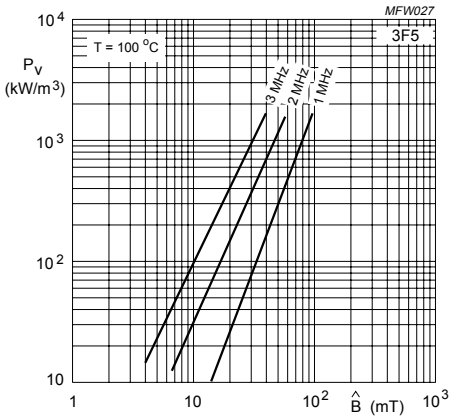

Fig.6 Specific power loss as a function of peak flux density with frequency as a parameter.

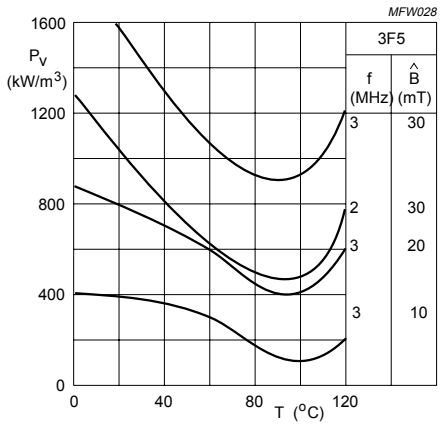

Fig.7 Specific power loss for several frequency/flux density combinations as a function of temperature.

3H3 SPECIFICATIONS

A low frequency filter material optimized for frequencies up to 0.2 MHz.

	CONDITIONS	VALUE	UNIT
μ_i	25 °C; ≤10 kHz; 0.25 mT	2000 ±20%	
B	25 °C; 10 kHz; 1200 A/ m 100 °C; 10 kHz; 1200 A/ m	≈ 360 ≈ 270	mT
$\tan\delta/\mu_i$	25 °C; 0.25 mT; 30 kHz 25 °C; 0.25 mT; 100 kHz	$\leq 1.6 \times 10^{-6}$ $\leq 2.5 \times 10^{-6}$	
η_B	25 °C; 100 kHz; 1.5 to 3 mT	$\leq 0.6 \times 10^{-3}$	T^{-1}
D_F	0.25 mT; 10 kHz: 25 °C 40 °C	$\leq 3 \times 10^{-6}$ $\leq 3 \times 10^{-6}$	
α_F	≤10 kHz; 0.25 mT; 5 to 25 °C 25 to 55 °C 25 to 70 °C	 $(0.7 \pm 0.3) \times 10^{-6}$ $(0.7 \pm 0.3) \times 10^{-6}$ $(0.7 \pm 0.3) \times 10^{-6}$	K^{-1}
ρ	DC; 25 °C	≈2	Ωm
T_C		≥160	°C
density		≈4700	kg/m^3

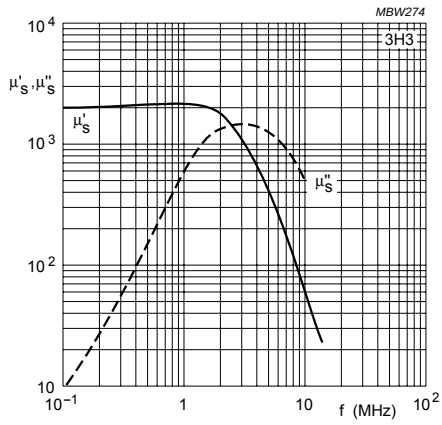

Fig.1 Complex permeability as a function of frequency.

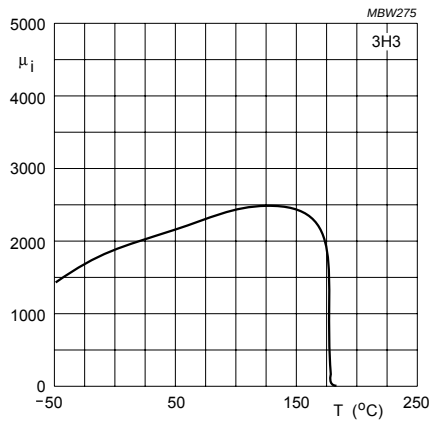

Fig.2 Initial permeability as a function of temperature.

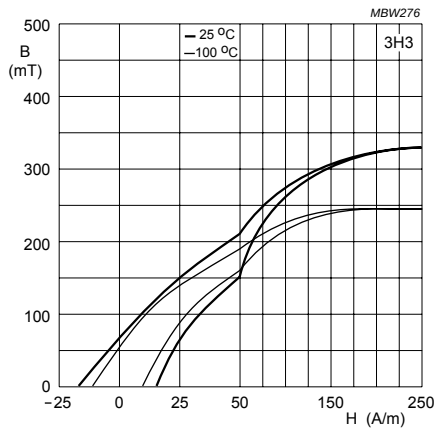

Fig.3 Typical B-H loops.

Soft Ferrites

3R1 SPECIFICATIONS

MnZn ferrite with a nearly rectangular hysteresis loop for use in magnetic regulators/amplifiers.

SYMBOL	CONDITIONS	VALUE	UNIT
μ_i	25 °C; ≤10 kHz; 0.25 mT	800 ±20%	
B	25 °C; 10 kHz; 1200 A/m 100 °C; 10 kHz; 1200 A/m	≈ 410 ≈ 340	mT
B_r	from 1 kA/m; 25 °C from 1 kA/m; 100 °C	≥ 310 ≥ 220	mT
H_c	from 1 kA/m; 25 °C from 1 kA/m; 100 °C	≤ 52 ≤ 23	A/m
ρ	DC; 25 °C	≈ 10^3	Ωm
T_C		≥ 230	°C
density		≈ 4700	kg/m^3

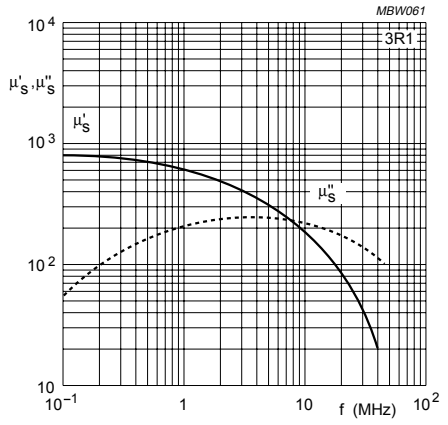

Fig.1 Complex permeability as a function of frequency.

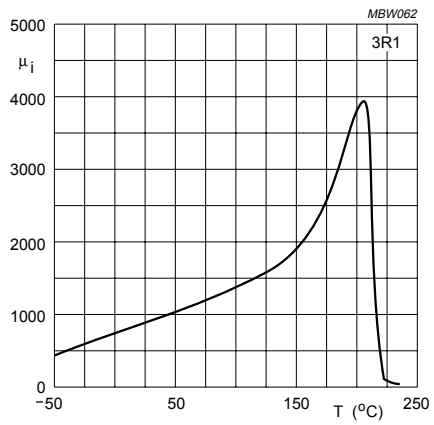

Fig.2 Initial permeability as a function of temperature.

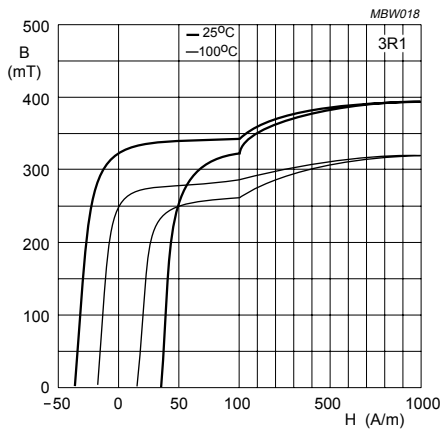

Fig.3 Typical B-H loops.

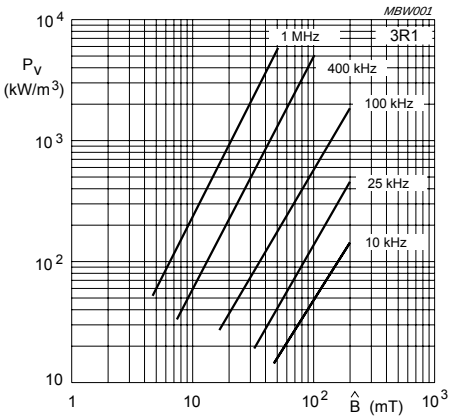

Fig.4 Specific power loss as a function of peak flux density with frequency as a parameter.

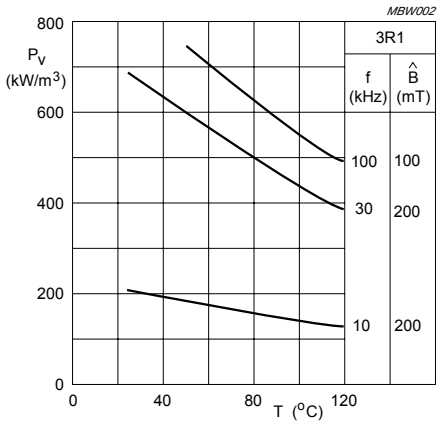

Fig.5 Specific power loss for several frequency/flux density combinations as a function of temperature.

Remark:

When 3R1 ring cores are driven exactly at their natural mechanical resonant frequencies a magneto-elastic resonance will occur. With large flux excursions and no mechanical damping, amplitudes can become so high that the maximum tensile stress of the ferrite is exceeded. Cracks or even breakage of the ring core could be the result. It is advised not to drive the toroidal cores at their radial resonant frequencies or even subharmonics (e.g. half this resonant frequency).

Resonant frequencies can be calculated for any ring core with the following simple formula:

$$f_r = \frac{5700}{\pi\left(\frac{D_o + D_i}{2}\right)} \text{ kHz}$$

where:

f = radial resonant frequency (kHz)

D_o = outside diameter (mm)

D_i = inside diameter (mm).

3S1 SPECIFICATIONS

A low frequency EMI-suppression material specified on impedance and optimized for frequencies up to 30 MHz.

SYMBOL	CONDITIONS	VALUE	UNIT
μ_i	25 °C; ≤10 kHz; 0.25 mT	≈ 4000	
B	25 °C; 10 kHz; 1200 A/m 100 °C; 10 kHz; 1200 A/m	≈ 400 ≈ 230	mT
$\lvert Z \rvert$ (1)	25 °C; 1 MHz 25 °C; 10 MHz	≥ 30 ≥ 60	Ω
ρ	DC; 25 °C	≈ 1	Ωm
T_C		≥ 125	°C
density		≈ 4900	kg/m^3

Note

1. Measured on a bead ∅5 × ∅2 × 10 mm.

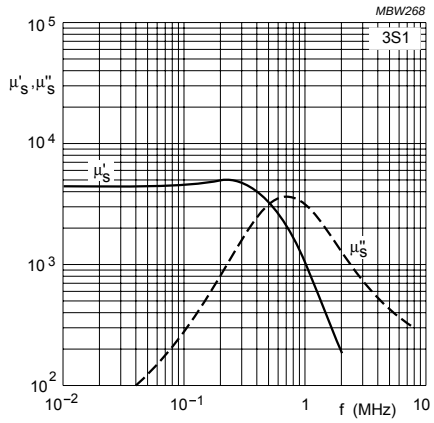

Fig.1 Complex permeability as a function of frequency.

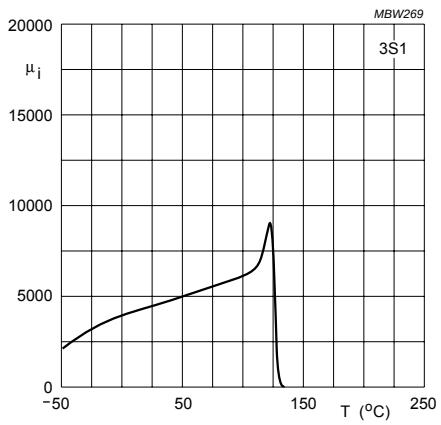

Fig.2 Initial permeability as a function of temperature.

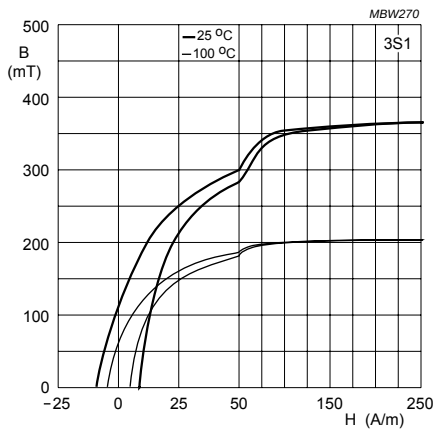

Fig.3 Typical B-H loops.

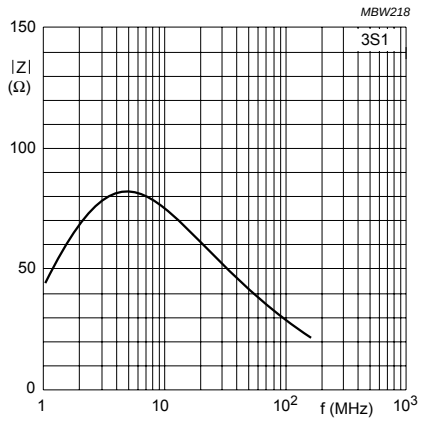

Fig.3 Impedance as a function of frequency, measured on a bead ∅5 × ∅2 × 10 mm.

3S3 SPECIFICATIONS

This wideband EMI-suppression material is specified on impedance and optimized for frequencies from 30 to 1000 MHz in applications with high bias currents at elevated temperatures (e.g. rods for chokes in commutation motors).

SYMBOL	CONDITIONS	VALUE	UNIT
μ_i	25 °C; ≤10 kHz; 0.25 mT	≈ 350	
B	25 °C; 10 kHz; 1200 A/m 100 °C; 10 kHz; 1200 A/m	≈ 320 ≈ 270	mT
$\lvert Z \rvert$ (1)	25 °C; 30 MHz 25 °C; 100 MHz 25 °C; 300 MHz	≥ 25 ≥ 60 ≥ 100	Ω
ρ	DC; 25 °C	≈ 10^4	Ωm
T_C		≥ 225	°C
density		≈ 4800	kg/m^3

Note

1. Measured on a bead ∅5 × ∅2 × 10 mm.

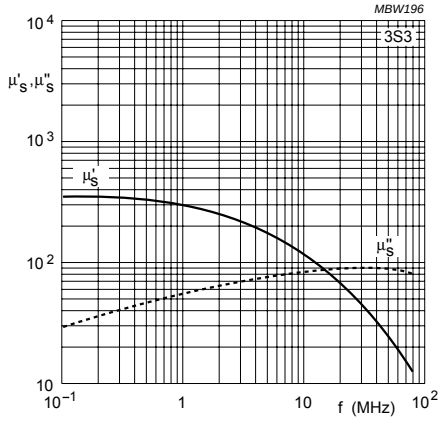

Fig.1 Complex permeability as a function of frequency.

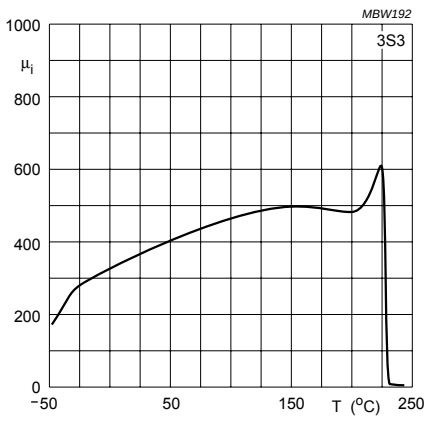

Fig.2 Initial permeability as a function of temperature.

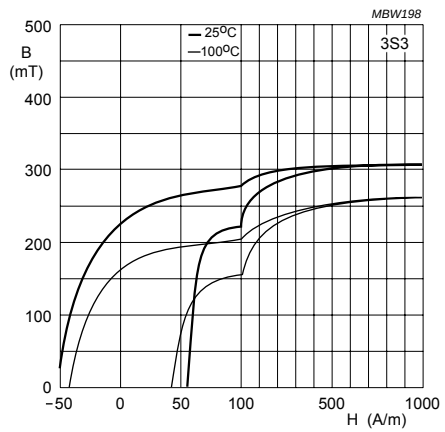

Fig.3 Typical B-H loops.

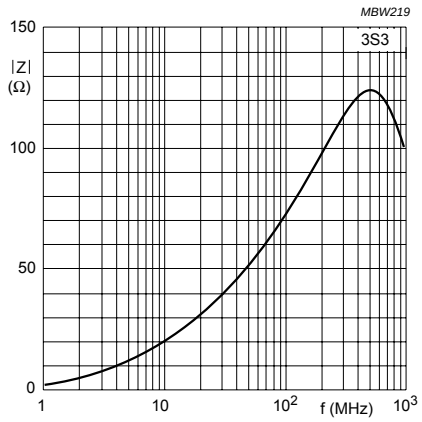

Fig.4 Impedance as a function of frequency measured on a bead ∅5 × ∅2 × 10 mm.

3S4 SPECIFICATIONS

Wideband EMI-suppression material specified on impedance and optimized for frequencies from 10 to 300 MHz.

SYMBOL	CONDITIONS	VALUE	UNIT
μ_i	25 °C; ≤10 kHz; 0.25 mT	≈ 1700	
B	25 °C; 10 kHz; 1200 A/m 100 °C; 10 kHz; 1200 A/m	≈ 320 ≈ 170	mT
|Z| (1)	25 °C; 3 MHz 25 °C; 30 MHz 25 °C; 100 MHz 25 °C; 300 MHz	≥ 25 ≥ 60 ≥ 80 ≥ 90	Ω
ρ	DC; 25 °C	≈ 10^3	Ωm
T_C		≥ 110	°C
density		≈ 4800	kg/m^3

Note

1. Measured on a bead ∅5× ∅2 × 10 mm.

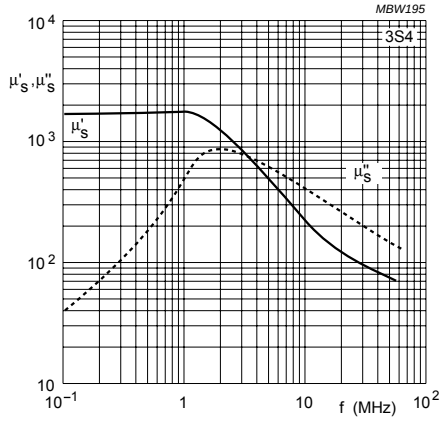

Fig.1 Complex permeability as a function of frequency.

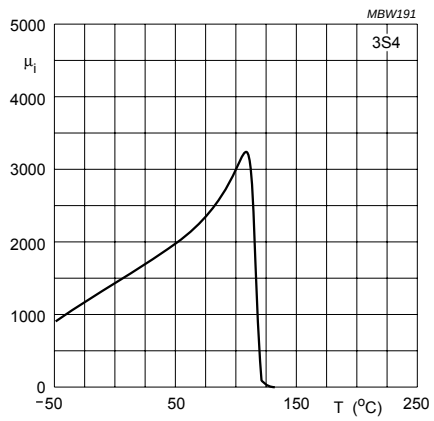

Fig.2 Initial permeability as a function of temperature.

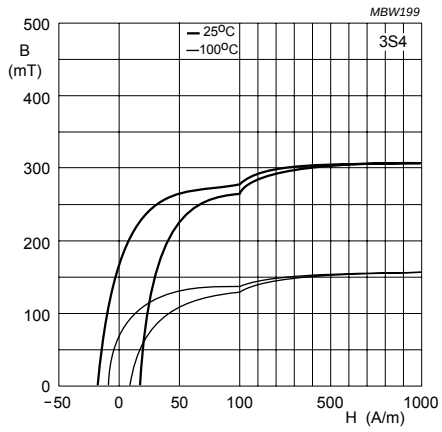

Fig.3 Typical B-H loops.

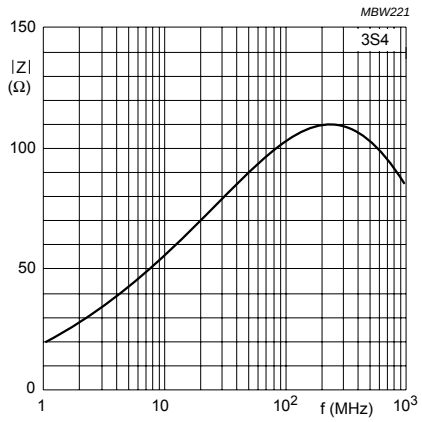

Fig.4 Impedance as a function of frequency measured on a bead ∅5 × ∅2 × 10 mm.

3S5 SPECIFICATIONS

A low frequency EMI-suppression material specified on impedance and optimized for frequencies up to 30 MHz in applications with high bias currents at elevated temperatures (e.g. automotive and industrial).

SYMBOL	CONDITIONS	VALUE	UNIT
μ_i	25 °C; ≤10 kHz; 0.25 mT	3800 ± 20%	
B	25 °C;10 kHz; 1200 A/m 100 °C; 10 kHz; 1200 A/m	≈ 545 ≈ 435	mT
|Z|(1)	25 °C; 1 MHz 25 °C; 10 MHz	≥ 20 ≥ 40	Ω
ρ	DC; 25 °C	≈ 10	Ωm
T_C		≥ 255	°C
density		≈ 4800	kg/m³

1. Measured on a bead ∅5 × ∅2 × 10 mm.

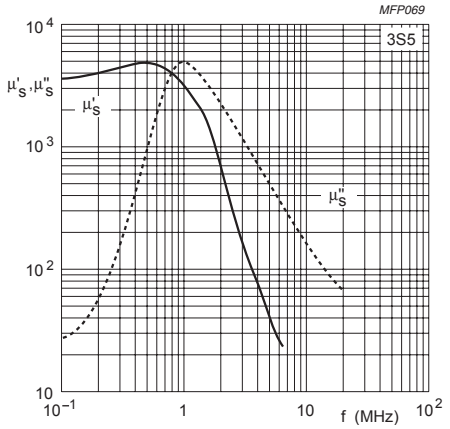

Fig.1 Complex permeability as a function of frequency.

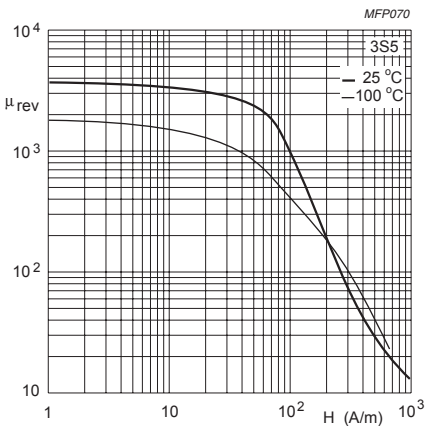

Fig.2 Reversible permeability as a function of magnetic field strength.

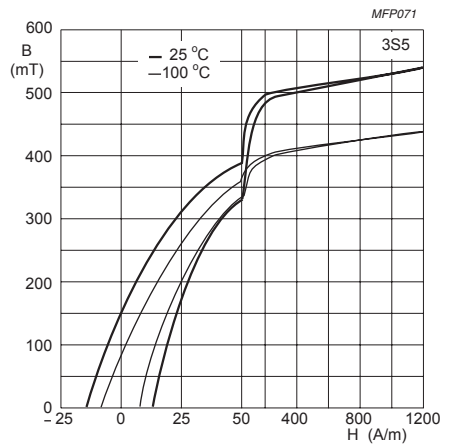

Fig.3 Typical B-H loops.

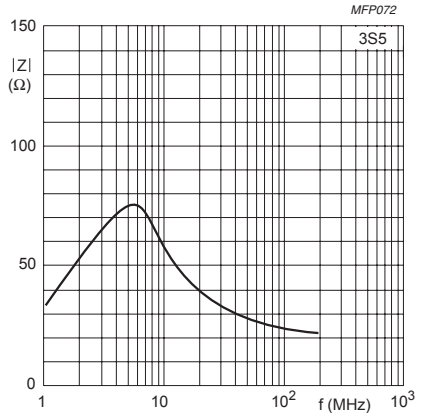

Fig.4 Impedance as a function of frequency. measured on a bead ∅5 × ∅2 × 10 mm.

4A11 SPECIFICATIONS

Medium permeability NiZn ferrite for use in wideband EMI-suppression (30 - 1000 MHz) as well as RF wideband and balun transformers.

SYMBOL	CONDITIONS	VALUE	UNIT
μ_i	25 °C; ≤10 kHz; 0.25 mT	850 ±20%	
B	25 °C; 10 kHz; 1200 A/m 100 °C; 10 kHz; 1200 A/m	≈ 340 ≈ 230	mT
$\tan\delta/\mu_i$	25 °C; 1 MHz; 0.25 mT 25 °C; 3 MHz; 0.25 mT	$\leq 100 \times 10^{-6}$ $\leq 1000 \times 10^{-6}$	
ρ	DC; 25 °C	$\approx 10^5$	Ωm
T_C		≥ 125	°C
density		≈ 5100	kg/m³

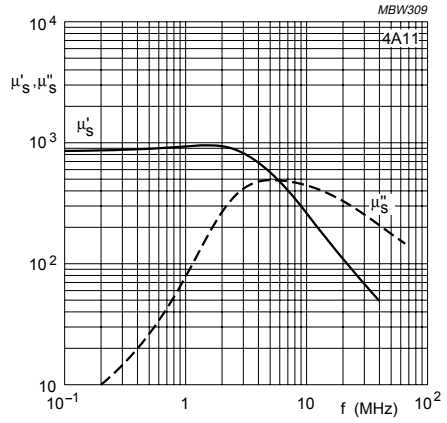

Fig.1 Complex permeability as a function of frequency.

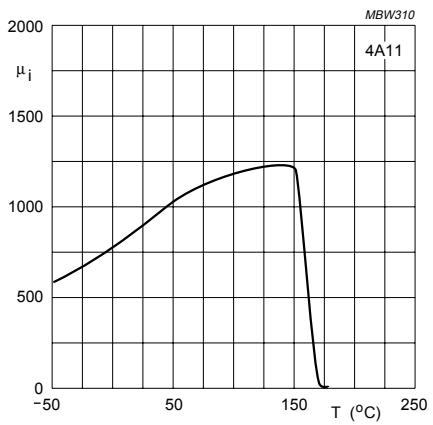

Fig.2 Initial permeability as a function of temperature.

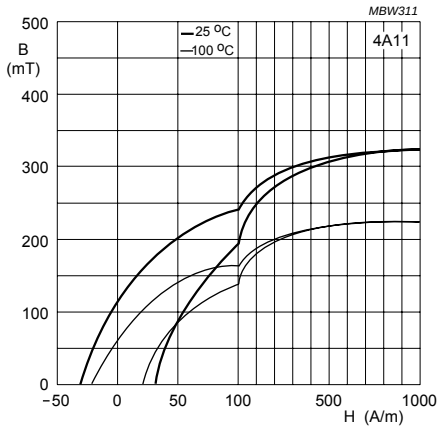

Fig.3 Typical B-H loops.

4A15 SPECIFICATIONS

High permeability NiZn ferrite for use in wideband EMI-suppression (10 - 300 MHz) as well as RF wideband and balun transformers.

SYMBOL	CONDITIONS	VALUE	UNIT
μ_i	25 °C; ≤10 kHz; 0.25 mT	1200 ±20%	
B	25 °C; 10 kHz; 1200 A/m 100 °C; 10 kHz; 1200 A/m	≈ 350 ≈ 230	mT
$\tan\delta/\mu_i$	25 °C; 1 MHz; 0.25 mT 25 °C; 3 MHz; 0.25 mT	$\leq 300 \times 10^{-6}$ $\leq 1500 \times 10^{-6}$	
ρ	DC; 25 °C	$\approx 10^5$	Ωm
T_C		≥ 125	°C
density		≈ 5100	kg/m³

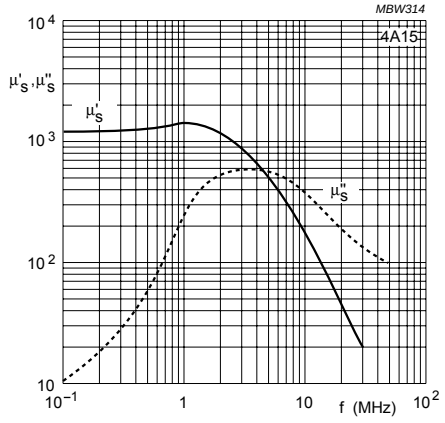

Fig.1 Complex permeability as a function of frequency.

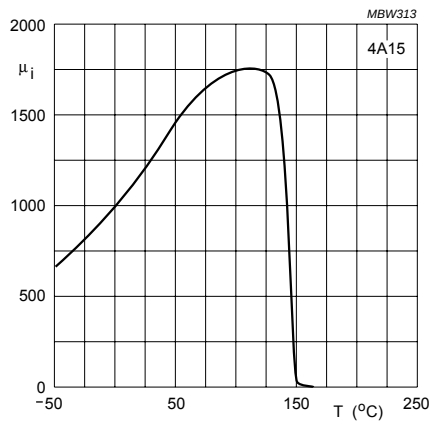

Fig.2 Initial permeability as a function of temperature.

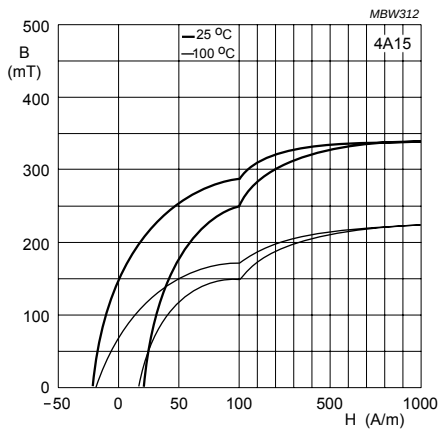

Fig.3 Typical B-H loops.

4A20 SPECIFICATIONS

High permeability NiZn ferrite for use in wideband EMI-suppression (10 - 300 MHz) as well as RF wideband and balun transformers.

SYMBOL	CONDITIONS	VALUE	UNIT
μ_i	25 °C; ≤10 kHz; 0.25 mT	2000 ± 20 %	
B	25 °C; 10 kHz; 1200 A/m	≈ 260	mT
	80 °C; 10 kHz; 1200 A/m	≈ 150	
ρ	DC; 25 °C	≈ 10^5	Ωm
T_C		≥ 100	°C
density		≈ 5000	kg/m^3

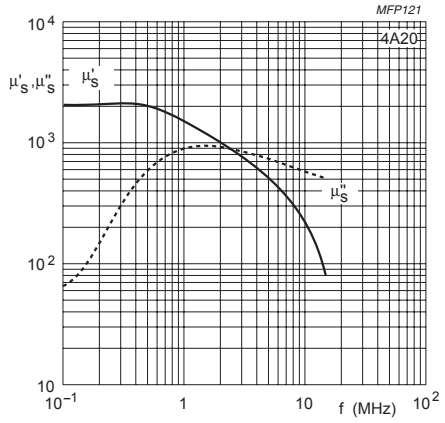

Fig.1 Complex permeability as a function of frequency.

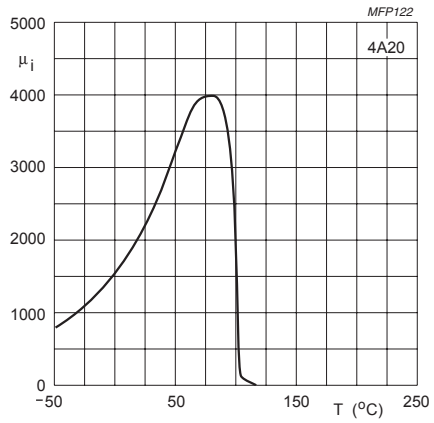

Fig.2 Initial permeability as a function of temperature.

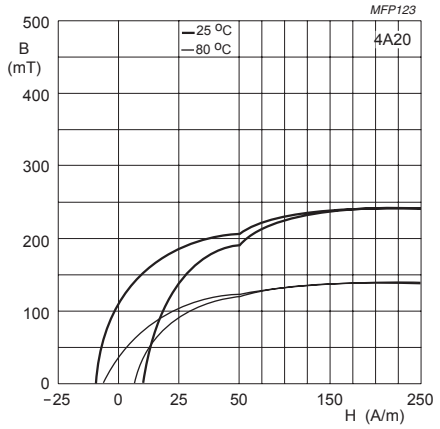

Fig.3 Typical B-H loops.

4B1 SPECIFICATIONS

Medium permeability NiZn ferrite for use in wideband EMI-suppression (30 - 1000 MHz) as well as RF tuning, wideband and balun transformers.

SYMBOL	CONDITIONS	VALUE	UNIT
μ_i	25 °C; ≤10 kHz; 0.25 mT	250 ±20%	
B	25 °C; 10 kHz; 3000 A/m 100 °C; 10 kHz; 3000 A/m	≈ 360 ≈ 310	mT
$\tan\delta/\mu_i$	25 °C; 1 MHz; 0.25 mT 25 °C; 3 MHz; 0.25 mT	$\leq 90 \times 10^{-6}$ $\leq 300 \times 10^{-6}$	
ρ	DC; 25 °C	$\approx 10^5$	Ωm
T_C		≥ 250	°C
density		≈ 4600	kg/m³

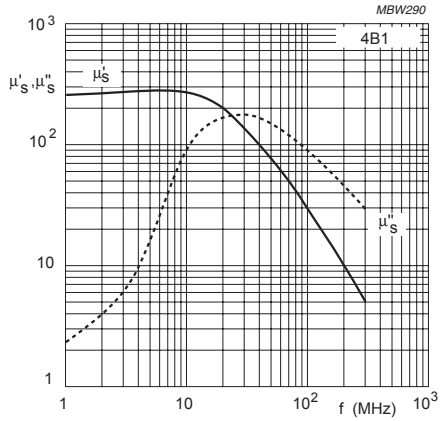

Fig.1 Complex permeability as a function of frequency.

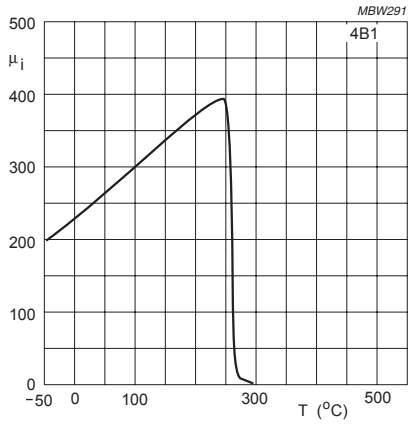

Fig.2 Initial permeability as a function of temperature.

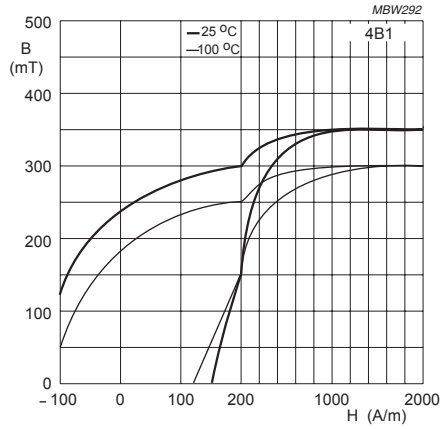

Fig.3 Typical B-H loops.

4B2 SPECIFICATIONS

Medium permeability NiZn ferrite for use in RF tuning, especially antenna rods in RFID transponders in automotive applications, and wideband and balun transformers.

SYMBOL	CONDITIONS	VALUE	UNIT
μ_i	25 °C; ≤10 kHz; 0.25 mT	250 ± 20 %	
B	25 °C; 10 kHz; 3000 A/m 100 °C; 10 kHz; 3000 A/m	≈ 360 ≈ 310	mT
$\tan\delta/\mu_i$	25 °C; 3 MHz; 0.25 mT	$\leq 300 \times 10^{-6}$	
α_F	≤10 kHz; 0.25 mT; −40 to 25 °C −10 to 55 °C 0 to 25 °C 25 to 55 °C 25 to 85 °C	 $(-1 \pm 4) \times 10^{-6}$ $(-1 \pm 4) \times 10^{-6}$ $(-2.5 \pm 4) \times 10^{-6}$ $(2 \pm 4) \times 10^{-6}$ $(0.5 \pm 4) \times 10^{-6}$	K^{-1}
ρ	DC; 25 °C	$\approx 10^5$	Ωm
T_C		≥ 335	°C
density		≈ 4600	kg/m^3

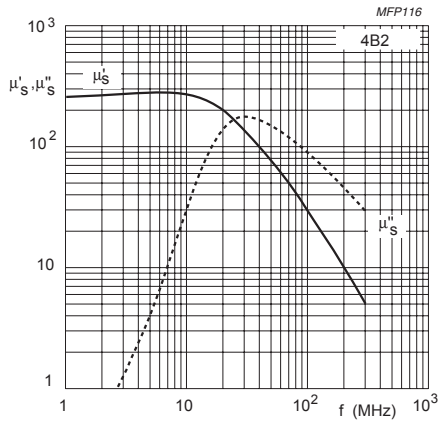

Fig.1 Complex permeability as a function of frequency.

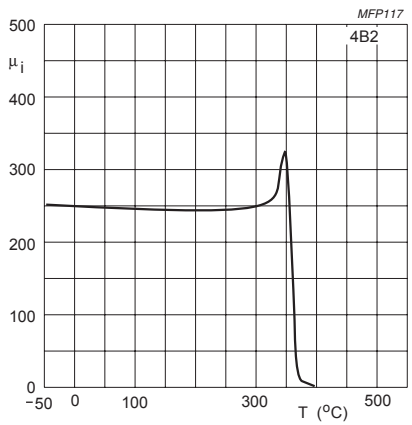

Fig.2 Initial permeability as a function of temperature.

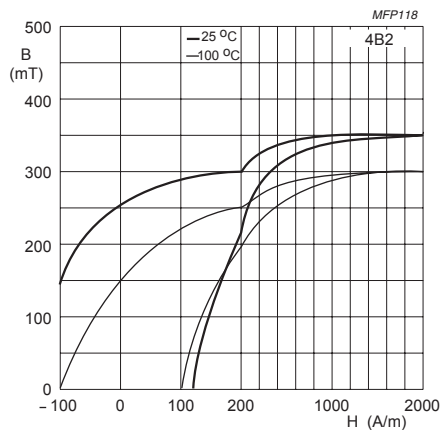

Fig.3 Typical B-H loops.

4B3 SPECIFICATIONS

Medium permeability specialty NiZn ferrite only used in large toroids and machined products mainly for scientific particle accelerators operating at frequencies < 10 MHz.

SYMBOL	CONDITIONS	VALUE	UNIT
μ_i	25 °C; ≤10 kHz; 0.25 mT	300 ±20%	
B	25 °C; 10 kHz; 3000 A/m 100 °C; 10 kHz; 3000 A/m	≈ 420 ≈ 350	mT
ρ	DC; 25 °C	≈ 10^5	Ωm
T_C		≥ 250	°C
density		≈ 5000	kg/m^3

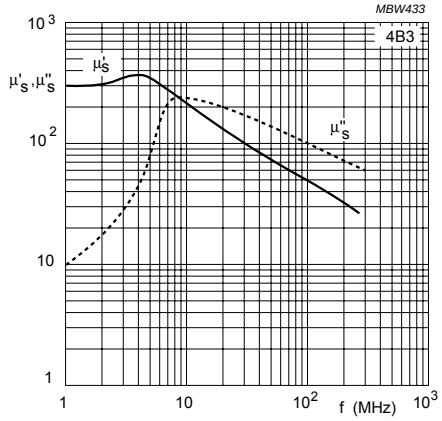

Fig.1 Complex permeability as a function of frequency.

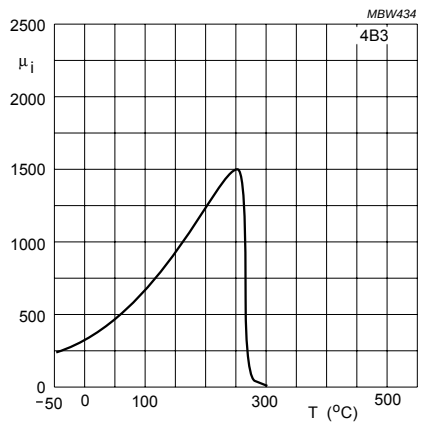

Fig.2 Initial permeability as a function of temperature.

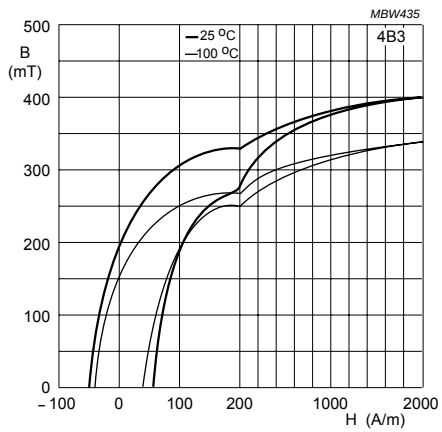

Fig.3 Typical B-H loops.

4C65 SPECIFICATIONS

Low permeability NiZn ferrite for use in RF tuning, wideband and balun transformers.

SYMBOL	CONDITIONS	VALUE	UNIT
μ_i	25 °C; ≤10 kHz; 0.25 mT	125 ±20%	
B	25 °C; 10 kHz; 3000 A/m 100 °C; 10 kHz; 3000 A/m	≈ 380 ≈ 340	mT
$\tan\delta/\mu_i$	25 °C; 3 MHz; 0.25 mT 25 °C; 10 MHz; 0.25 mT	$\leq 80 \times 10^{-6}$ $\leq 130 \times 10^{-6}$	
ρ	DC; 25 °C	$\approx 10^5$	Ωm
T_C		≥ 350	°C
density		≈ 4500	kg/m³

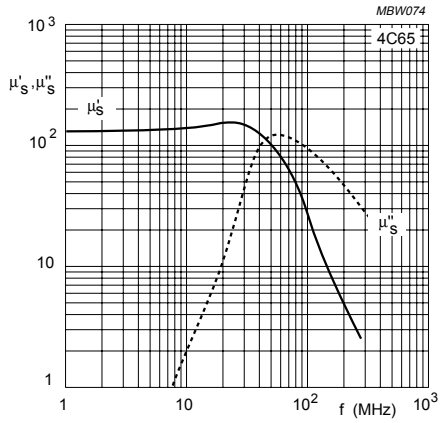

Fig.1 Complex permeability as a function of frequency.

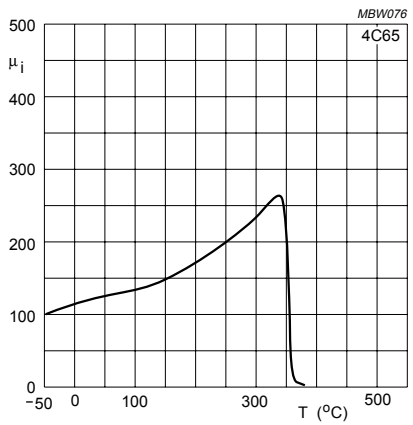

Fig.2 Initial permeability as a function of temperature.

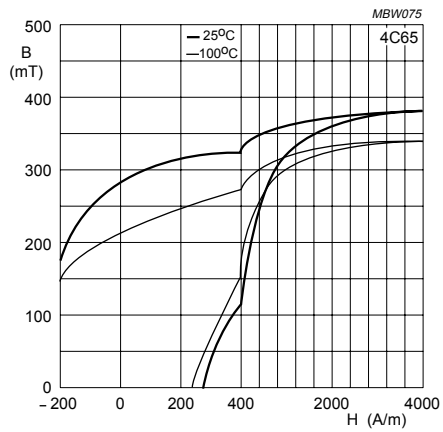

Fig.3 Typical B-H loops.

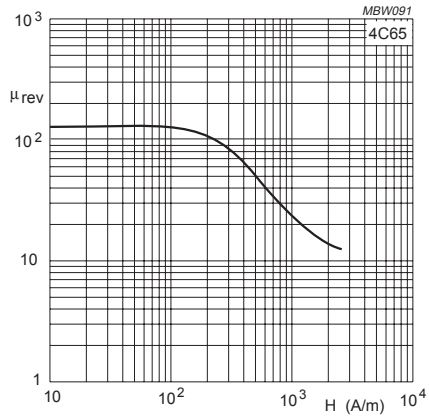

Fig.4 Reversible permeability as a function of magnetic field strength.

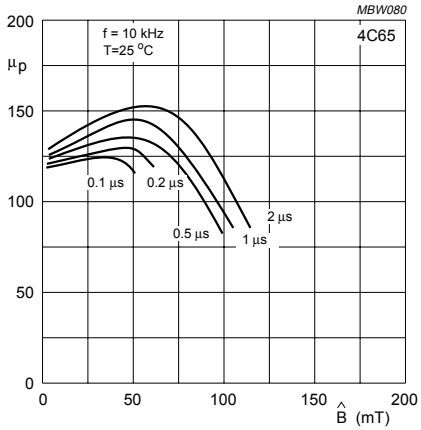

Fig.5 Pulse characteristics (unipolar pulses).

4D2 SPECIFICATIONS

Low permeability NiZn ferrite for use in RF tuning, wideband and balun transformers.

SYMBOL	CONDITIONS	VALUE	UNIT
μ_i	25 °C; ≤10 kHz; 0.25 mT	60 ±20%	
B	25 °C; 10 kHz; 10 kA/m 100 °C; 10 kHz; 10 kA/m	≈ 250 ≈ 230	mT
$\tan\delta/\mu_i$	25 °C; 10 MHz; 0.25 mT 25 °C; 30 MHz; 0.25 mT	$\leq 100 \times 10^{-6}$ $\leq 600 \times 10^{-6}$	
ρ	DC, 25 °C	$\approx 10^5$	Ωm
T_C		≥ 400	°C
density		≈ 4200	kg/m³

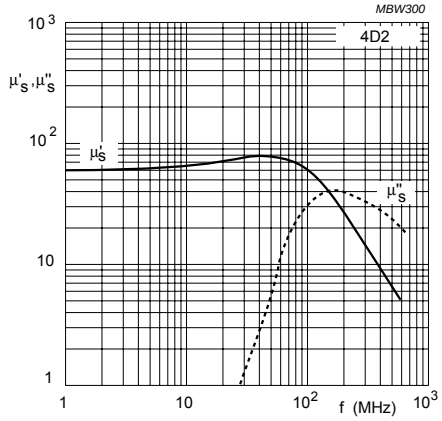

Fig.1 Complex permeability as a function of frequency.

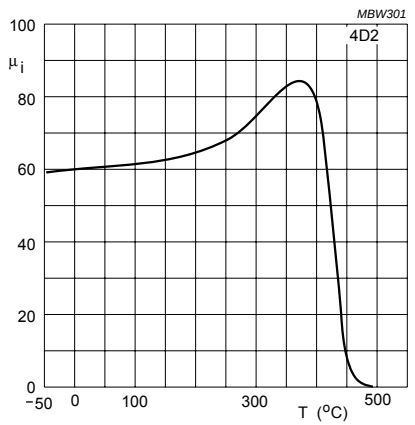

Fig.2 Initial permeability as a function of temperature.

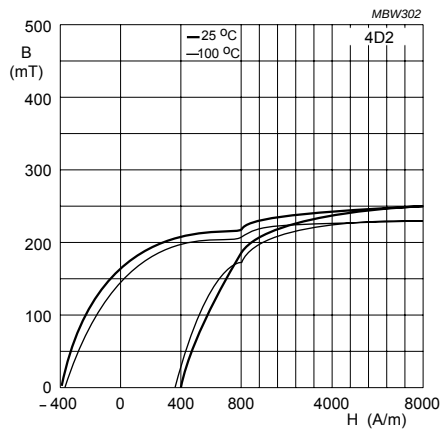

Fig.3 Typical B-H loops.

4E1 SPECIFICATIONS

Low permeability NiZn ferrite for use in RF tuning, wideband and balun transformers.

SYMBOL	CONDITIONS	VALUE	UNIT
μ_i	25 °C; ≤10 kHz; 0.25 mT	15 ±20%	
B	25 °C; 10 kHz; 20 kA/m 100 °C; 10 kHz; 20 kA/m	≈ 220 ≈ 210	mT
$\tan\delta/\mu_i$	25 °C; 10 MHz; 0.25 mT 25 °C; 30 MHz; 0.25 mT	$\leq 300 \times 10^{-6}$ $\leq 350 \times 10^{-6}$	
ρ	DC; 25 °C	$\approx 10^5$	Ωm
T_C		≥ 500	°C
density		≈ 3700	kg/m³

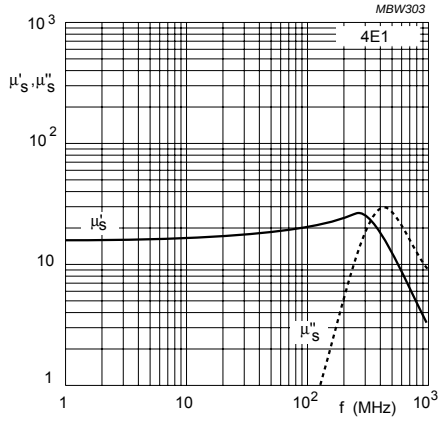

Fig.1 Complex permeability as a function of frequency.

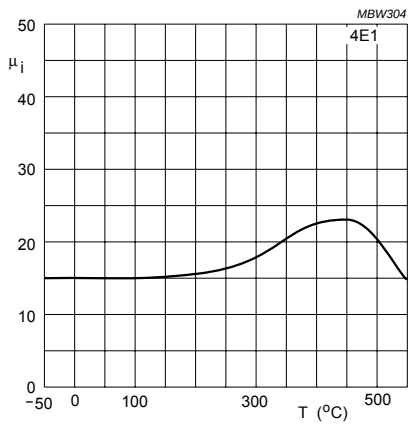

Fig.2 Initial permeability as a function of temperature.

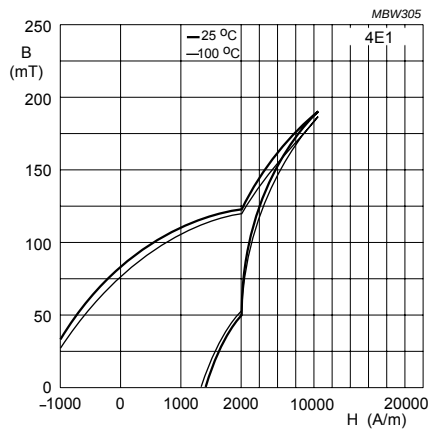

Fig.3 Typical B-H loops.

4E2 SPECIFICATIONS

Low permeability specialty NiZn ferrite only used in large toroids and machined products mainly for scientific particle accelerators operating at frequencies up to 100 MHz..

SYMBOL	CONDITIONS	VALUE	UNIT
μ_i	25 °C; ≤10 kHz; 0.25 mT	25 ±20%	
B	25 °C; 10 kHz; 10 kA/m	≈ 350	mT
	100 °C; 10 kHz; 10 kA/m	≈ 310	
ρ	DC, 25 °C	≈ 10^5	Ωm
T_C		≥ 400	°C
density		≈ 4000	kg/m^3

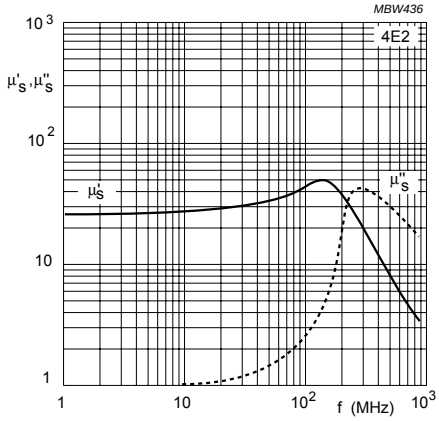

Fig.1 Complex permeability as a function of frequency.

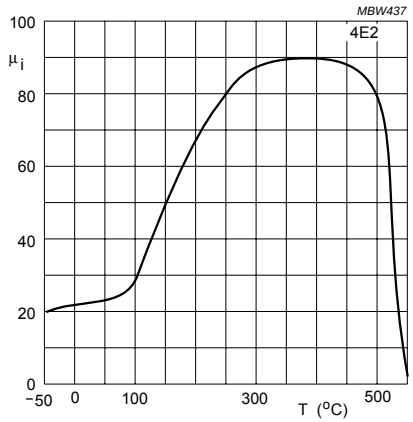

Fig.2 Initial permeability as a function of temperature.

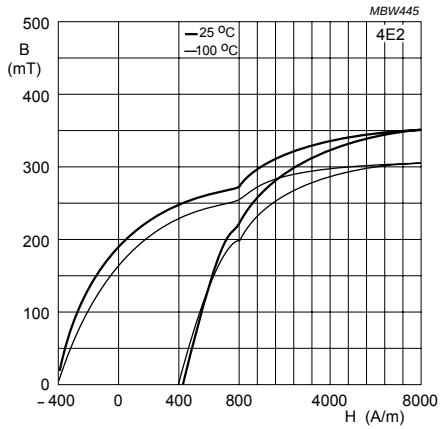

Fig.3 Typical B-H loops.

Soft Ferrites

4F1 SPECIFICATIONS

A very high frequency NiZn power material for use in power and general purpose transformers optimized for frequencies of 4 - 10 MHz.

SYMBOL	CONDITIONS	VALUE	UNIT
μ_i	25 °C; ≤10 kHz; 0.25 mT	≈ 80	
μ_a	100 °C; 25 kHz; 200 mT	≈ 300	
B	25 °C; 10 kHz; 3000 A/m 100 °C; 10 kHz; 3000 A/m	≈ 320 ≈ 260	mT
P_V	100 °C; 3 MHz; 10 mT 100 °C; 10 MHz; 5 mT	≤ 200 ≤ 200	kW/m^3
ρ	DC; 25 °C	≈ 10^5	Ωm
T_C		≥ 260	°C
density		≈ 4600	kg/m^3

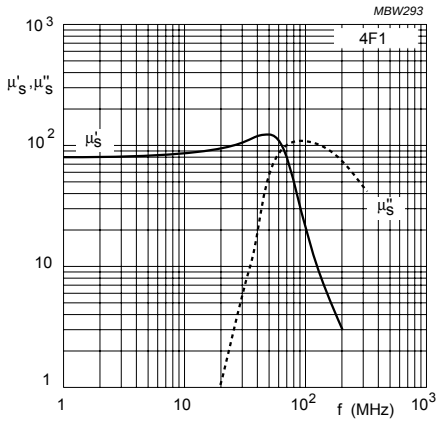

Fig.1 Complex permeability as a function of frequency.

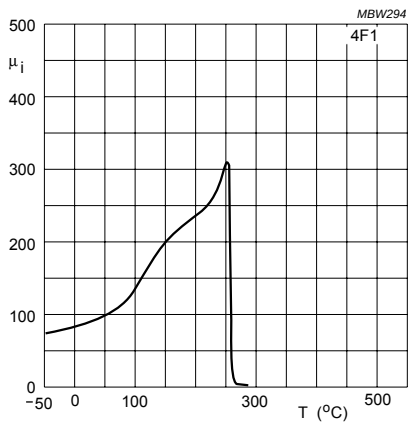

Fig.2 Initial permeability as a function of temperature.

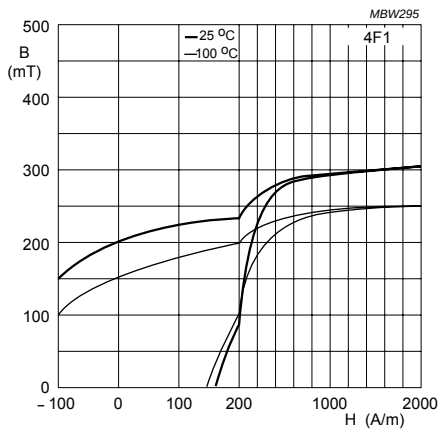

Fig.3 Typical B-H loops.

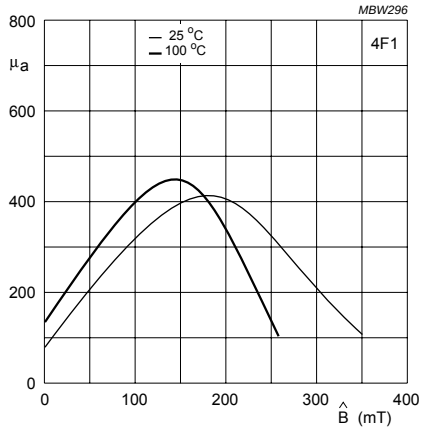

Fig.4 Amplitude permeability as function of peak flux density.

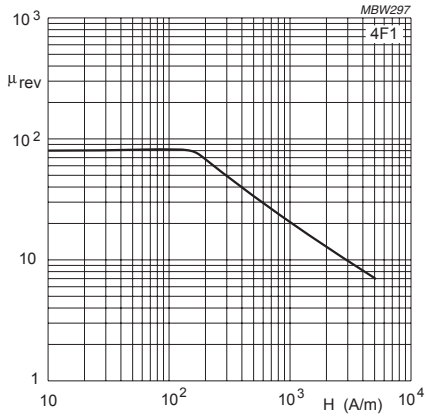

Fig.5 Reversible permeability as a function of magnetic field strength.

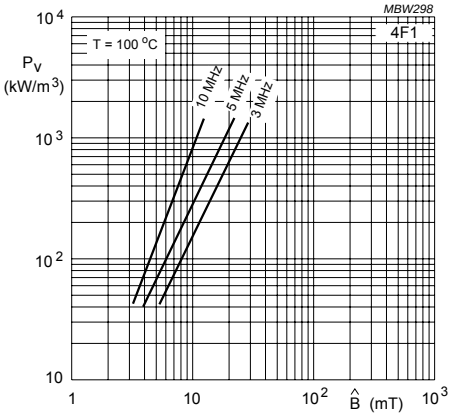

Fig.6 Specific power loss as a function of peak flux density with frequency as a parameter.

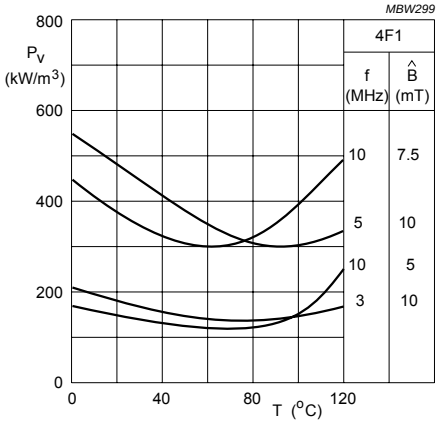

Fig.7 Specific power loss for several frequency/flux density combinations as a function of temperature.

4M2 SPECIFICATIONS

Low permeability specialty NiZn ferrite only used in large toroids and machined products mainly for scientific particle accelerators operating at frequencies up to 10 MHz.

SYMBOL	CONDITIONS	VALUE	UNIT
μ_i	25 °C; ≤10 kHz; 0.25 mT	140 ±20%	
B	25 °C; 10 kHz; 3000 A/m 100 °C; 10 kHz; 3000 A/m	≈ 310 ≈ 270	mT
ρ	DC; 25 °C	≈ 10^5	Ωm
T_C		≥ 200	°C
density		≈ 5000	kg/m^3

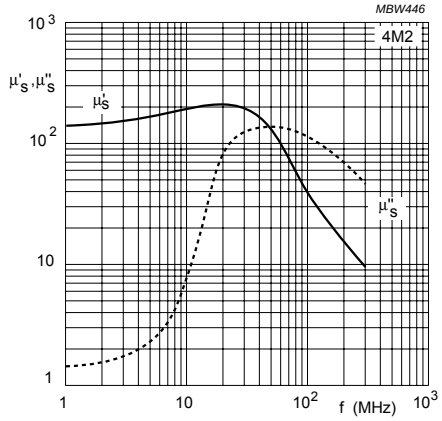

Fig.1 Complex permeability as a function of frequency.

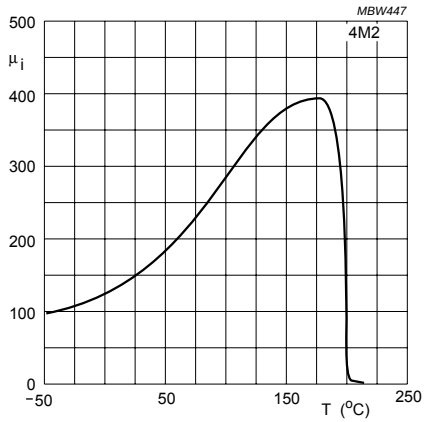

Fig.2 Initial permeability as a function of temperature.

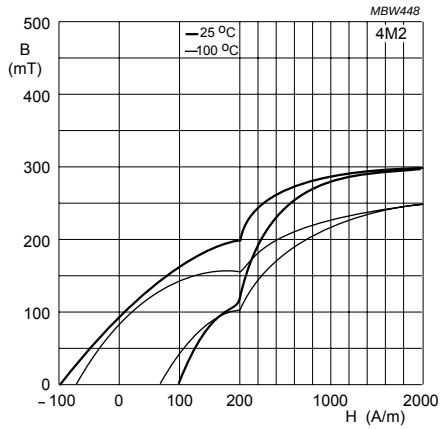

Fig.3 Typical B-H loops.

Soft Ferrites

4S2 SPECIFICATIONS

Wideband EMI-suppression material specified on impedance and optimized for frequencies from 30 to 1000 MHz.

SYMBOL	CONDITIONS	VALUE	UNIT
μ_i	25 °C; ≤10 kHz; 0.25 mT	≈ 850	
B	25 °C; 10 kHz; 1200 A/m 100 °C; 10 kHz; 1200 A/m	≈ 340 ≈ 230	mT
|Z| (1)	25 °C; 30 MHz 25 °C; 300 MHz	≥ 50 ≥ 90	Ω
ρ	DC; 25 °C	≈ 10^5	Ωm
T_C		≥ 125	°C
density		≈ 5000	kg/m^3

Note

1. Measured on a bead ∅5 × ∅2 × 10 mm.

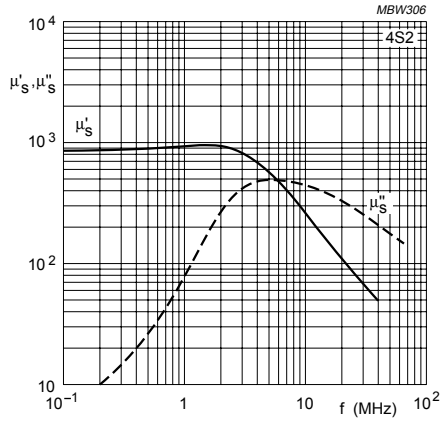

Fig.1 Complex permeability as a function of frequency.

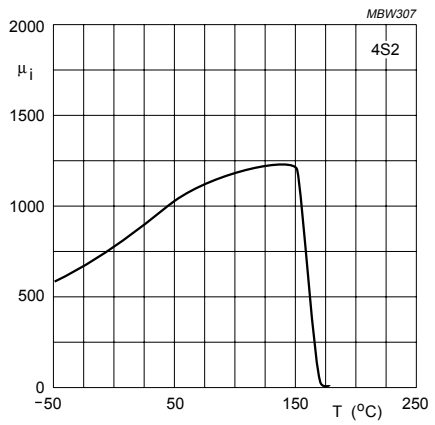

Fig.2 Initial permeability as a function of temperature.

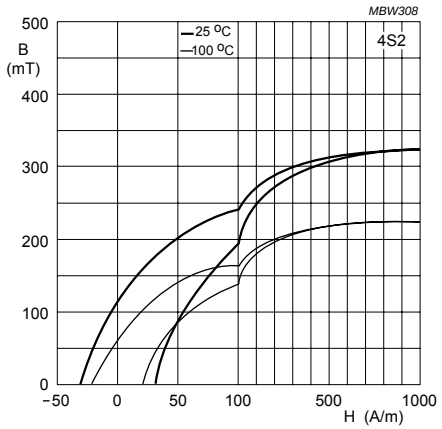

Fig.3 Typical B-H loops.

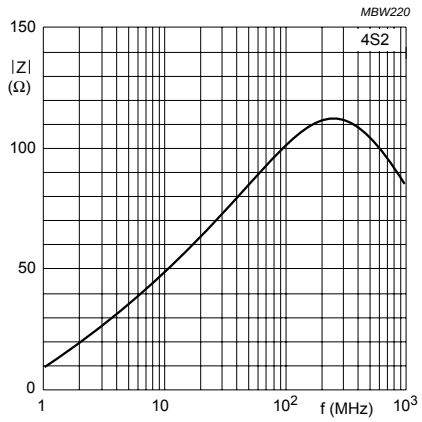

Fig.4 Impedance as a function of frequency, measured on a bead ∅5 × ∅2 × 10 mm.

4S3 SPECIFICATIONS

Wideband EMI-suppression material specified on impedance and optimized for frequencies from 30 to 1000 MHz.

SYMBOL	CONDITIONS	VALUE	UNIT
μ_i	25 °C; ≤10 kHz; 0.25 mT	250 ± 20 %	
B	25 °C; 10 kHz; 3000 A/m 100 °C; 10 kHz; 3000 A/m	≈ 360 ≈ 310	mT
|Z| (1)	25 °C; 30 MHz 25 °C; 50 MHz 25 °C; 200 MHz 25 °C; 500 MHz	≥ 10 ≥ 40 ≥ 200 ≥ 250	Ω
ρ	DC; 25 °C	≈ 10^5	Ωm
T_C		≥ 250	°C
density		≈ 4600	kg/m^3

Note

1. Measured on a bead ∅5 × ∅2 × 10 mm.

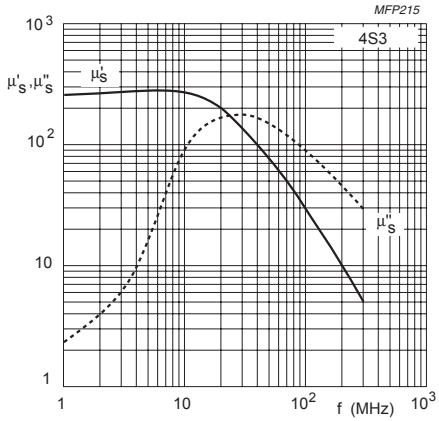

Fig.1 Complex permeability as a function of frequency.

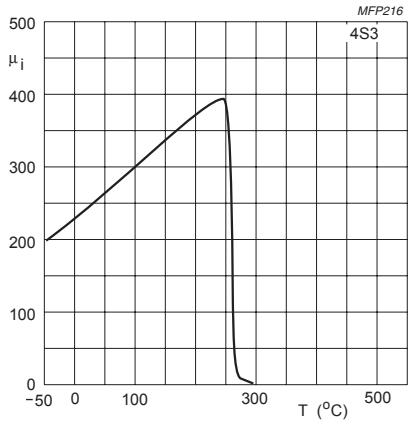

Fig.2 Initial permeability as a function of temperature.

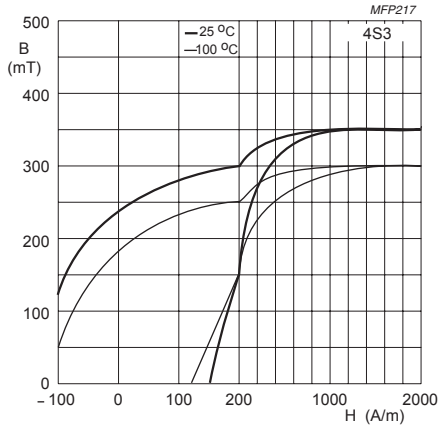

Fig.3 Typical B-H loops.

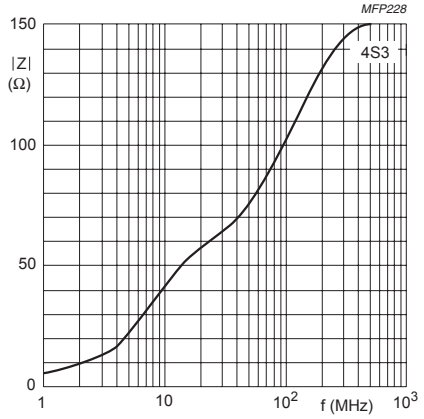

Fig.4 Impedance as a function of frequency, measured on a bead ∅5 × ∅2 × 10 mm.

4S60 SPECIFICATIONS

High permeability specialty NiZn ferrite only used in absorber tiles for anechoic chambers operating at frequencies up to 1000 MHz.

SYMBOL	CONDITIONS	VALUE	UNIT
μ_i	25 °C; ≤10 kHz; 0.25 mT	2000 ± 20 %	
B	25 °C; 10 kHz; 1200 A/m 80 °C; 10 kHz; 1200 A/m	≈ 260 ≈ 150	mT
ρ	DC; 25 °C	≈ 10^5	Ωm
T_C		≥ 100	°C
density		≈ 5000	kg/m^3

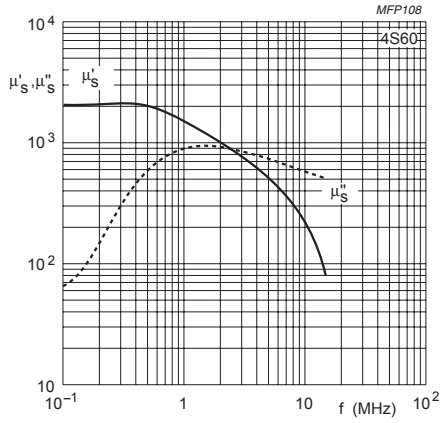

Fig.1 Complex permeability as a function of frequency.

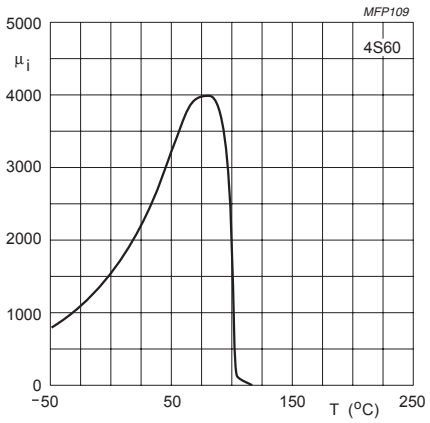

Fig.2 Initial permeability as a function of temperature.

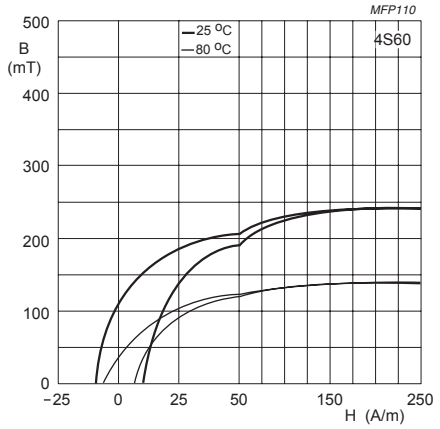

Fig.3 Typical B-H loops.

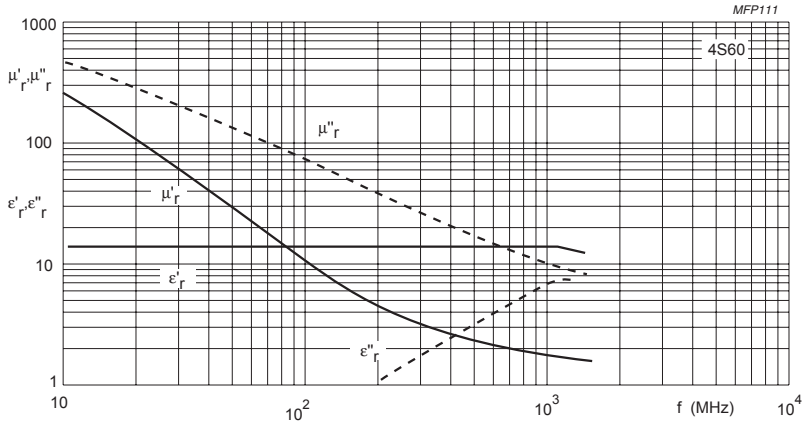

Fig.4 Complex permeability and permittivity as a function of frequency (high end).

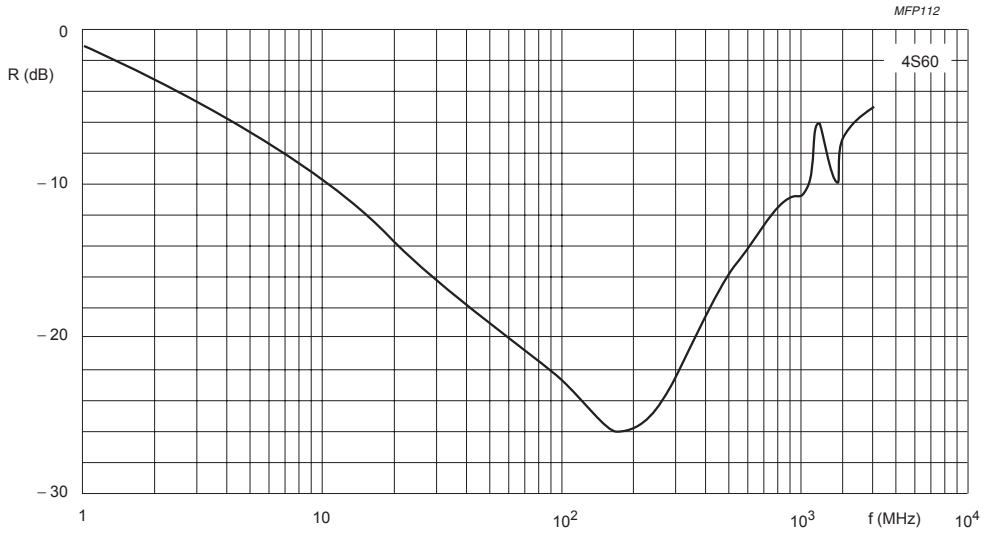

Fig.5 Reflectivity at normal incidence as a function of frequency.

8C11 SPECIFICATIONS

High permeability specialty NiZn ferrite only used in large toroids and machined products mainly for scientific particle accelerators operating at frequencies up to 1 MHz.

SYMBOL	CONDITIONS	VALUE	UNIT
μ_i	25 °C; ≤10 kHz; 0.25 mT	1200 ±20%	
B	25 °C; 10 kHz; 1200 A/m 100 °C; 10 kHz; 1200 A/m	≈ 310 ≈ 210	mT
ρ	DC; 25 °C	≈ 10^5	Ωm
T_C		≥ 125	°C
density		≈ 5100	kg/m³

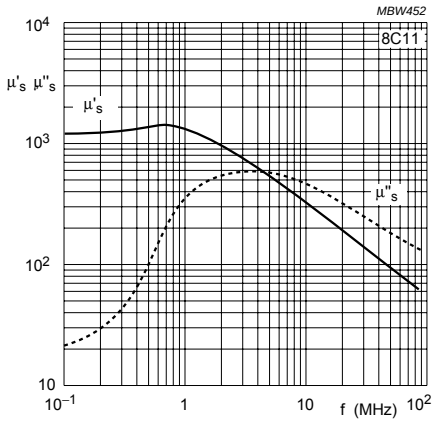

Fig.1 Complex permeability as a function of frequency.

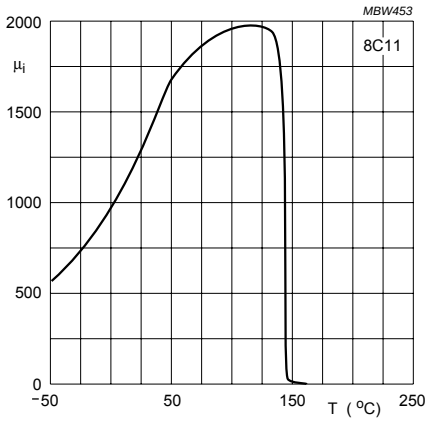

Fig.2 Initial permeability as a function of temperature.

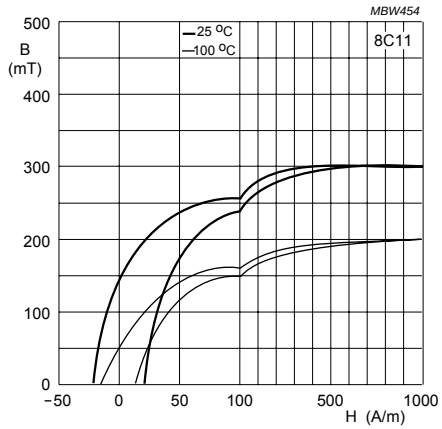

Fig.3 Typical B-H loops.

8C12 SPECIFICATIONS

High permeability specialty NiZn ferrite only used in large toroids and machined products mainly for scientific particle accelerators operating at frequencies up to 2 MHz.

SYMBOL	CONDITIONS	VALUE	UNIT
μ_i	25 °C; ≤10 kHz; 0.25 mT	900 ±20%	
B	25 °C; 10 kHz; 1200 A/m 100 °C; 10 kHz; 1200 A/m	≈ 260 ≈ 180	mT
ρ	DC; 25 °C	≈ 10^5	Ωm
T_C		≥ 125	°C
density		≈ 5100	kg/m^3

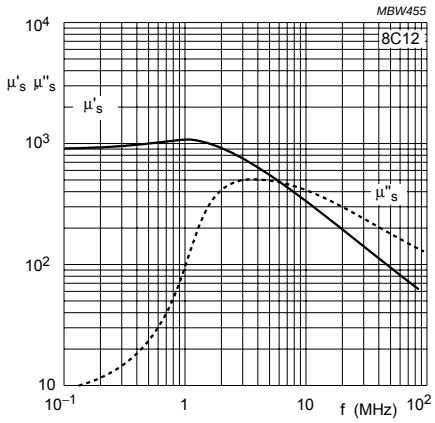

Fig.1 Complex permeability as a function of frequency.

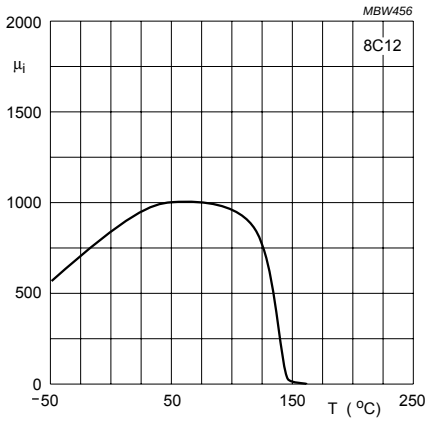

Fig.2 Initial permeability as a function of temperature.

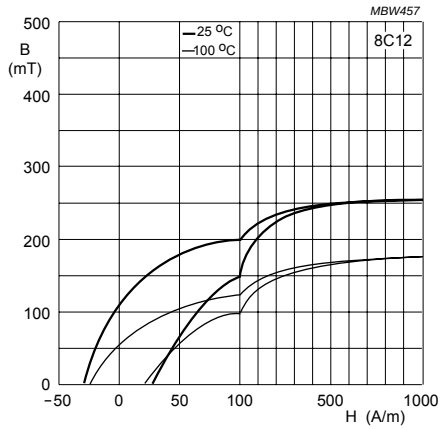

Fig.3 Typical B-H loops.

Soft Ferrites

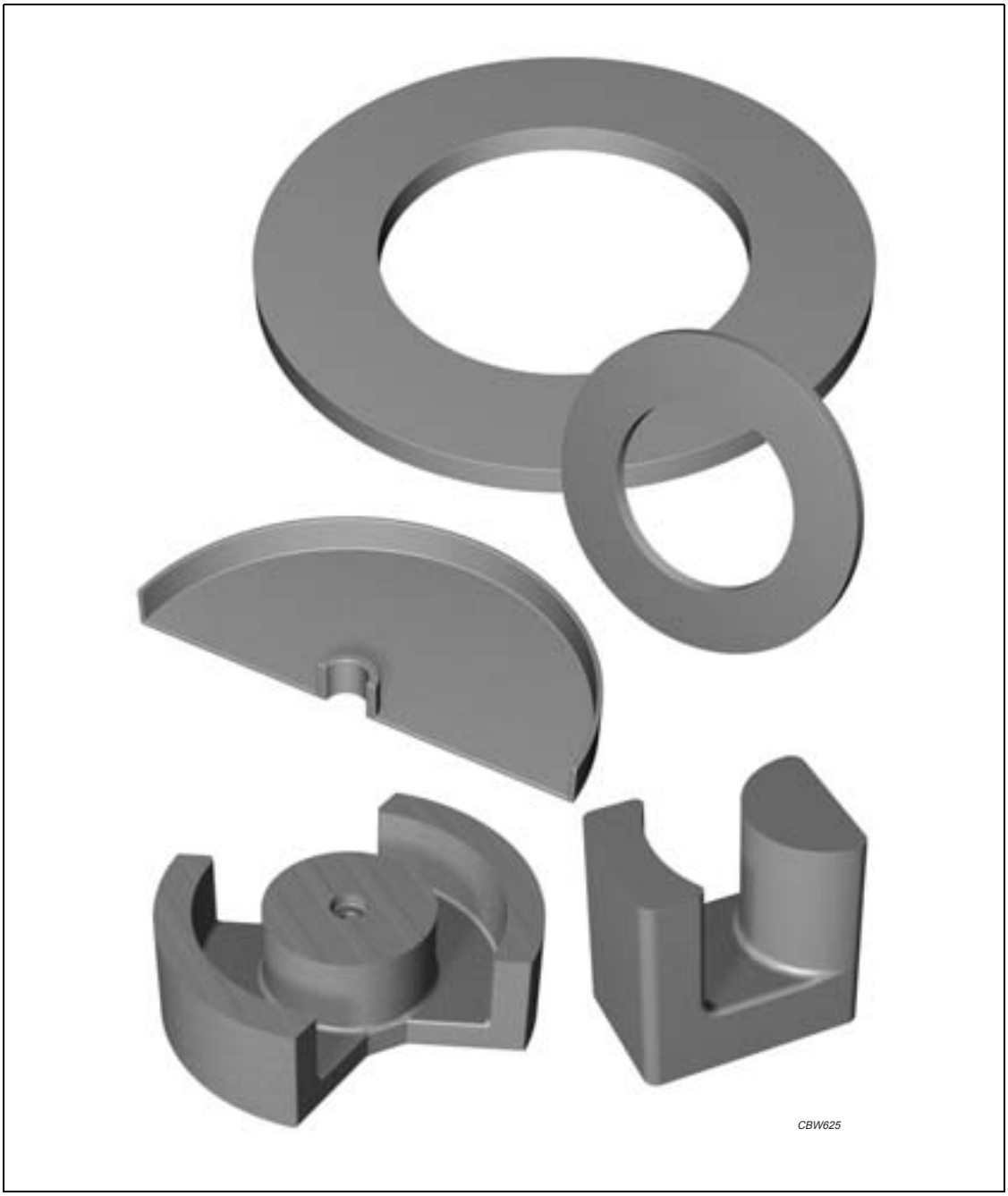

For more information on Product Status Definitions, see page 3.

INTRODUCTION

Ferrites are used not only in the known consumer and professional electronics applications, but also in science and industry. The specifications and tolerances required for scientific and industrial applications are generally very demanding and critical. Experts in ceramic technologies know that making ferrite is one thing, machining it to close tolerances is another.

Hence there are only a few ferrite manufacturers in the world who can deliver ferrites with the required magnetic properties and within critical tolerances.

FERROXCUBE is one of those few manufacturers but with a difference. We bring along with us the experience gained by supplying customized products to some of the most prestigious scientific institutions and industries.

This means we can support you in finding the best solution for any inductive component you may need. Especially if your requirements cannot be met with ferrite cores from our standard ranges.

Being a major worldwide supplier of a wide variety of Soft Ferrites gives us the experience and know-how to support such projects.

Shapes :
1. Rings
2. Blocks
3. Special shapes
4. Tiles

1. Ferrite in scientific particle accelerators (RINGS)

The application

Ferrites are used extensively in modern scientific experiments. One of the most exciting and advanced applications is in particle accelerators. Scientists are trying to discover the mysteries of the universe by smashing atomic particles with titanic forces. This requires particle beams to be accelerated to very high speeds and guided into a collision chamber with the help of specially designed magnetic rings.

Our materials

Ferroxcube's research and development can build on 50 years' experience in ferrite technology. We developed the required materials which fulfil the demanding specifications. Due to our long involvement with ferrite technology, we are one of only two major suppliers in the world who support such demanding projects. Because of the extremely demanding nature of the specifications, these magnetic rings are designed and developed in close interaction with the scientists. This has enabled us to develop unique material grades, which are processed in our highly controlled production environment to deliver the required product performance.

Our product range

Our range of large ring cores was developed especially for use in scientific particle accelerators. Applications include mainly RF cavities. Dynamic behaviour under pulse conditions is important for those applications, so special ferrite grades are optimized for low losses at high flux densities. These large rings have also been used successfully in delay lines for very high power such as in pulsed lasers or radar equipment. Sizes given on the drawings are just an example of our capability. Generally, all rings are made with dimensions agreed on request. Please contact us to discuss your needs.

General properties of the grades are described in the section on Material Grades. Specific properties, related to their use in particle accelerators, are provided in the following table.

Relevant properties of ferrites in accelerator applications

Properties specified in this section are related to room temperature (25 °C) unless otherwise stated. They have been measured on sintered, non-ground ring cores of dimension ∅36 × ∅28 × 6 mm which are not subjected to external stresses.

Products generally do not fully comply with the material specification. Deviations may occur due to shape, size and grinding operations. Detailed specifications are given in the data sheets or product drawings.

MATERIALS FOR PARTICLE ACCELERATORS

Materials and relevant values

PARAMETER	8C11	8C12	4M2	4E2	4B3
μ_i (±20%)	1200	900	140	25	300
μ_{rem} approx.	850	600	130	20	–
B_s 25 °C (mT, 800 A/m)	≥300	280	250	250	≥300
B_s 40 °C (mT, 800 A/m)	≥280	250	220	220	–
H_c (A/m, after 800 A/m)	≤20	30	100	500	<80
ρ DC (Ωm)	$>10^5$	$>10^5$	$>10^5$	$>10^5$	$>10^5$
T_C (°C)	≥125	≥125	≥150	≥400	≥250
μQ in remanence 200 kHz:					
10 mT		15×10^3			
20 mT		9×10^3			
50 mT		4×10^3			
μQ in remanence 500 kHz:					
10 mT		10×10^3			
20 mT		6×10^3			
50 mT		2.5×10^3			
μQ in remanence 1 MHz:					
5 mT		10×10^3	20×10^3		
10 mT		7.5×10^3	20×10^3		
20 mT		5×10^3	15×10^3		
30 mT		–	8×10^3		
μQ in remanence 2.5 MHz:					
5 mT			20×10^3		
10 mT			20×10^3		
20 mT			15×10^3		
30 mT			7×10^3		
μQ in remanence 5 MHz:					
5 mT			15×10^3		
10 mT			15×10^3		
20 mT			10×10^3		
30 mT			7×10^3		
μQ in remanence 10 MHz:					
5 mT			12×10^3		
10 mT			10×10^3		
μQ in remanence 80 MHz:					
1 mT				2.5×10^3	
μQ in remanence 100 MHz				2×10^3	
Decrease in μQ (%), measured 10 ms after application of DC bias (approx.)		10	15	30	
μ_Δ with DC bias field (approx.):					
0 A/m		600	130		
250 A/m		120	80		
500 A/m		50	40		
1000 A/m		22	22		
2000 A/m		8	12		
3000 A/m		5.5	8		
Frequency range (with or without DC bias) in MHz		up to 2	2 to 10	20 to 100	
Application area and special features	kicker magnets; high resistance	high frequency ratio possible with DC bias	fast recovery after magnetic bias	high frequency material	high (B_s + B_r)

PRODUCT OVERVIEW AND TYPE NUMBER STRUCTURE

Product overview

CORE TYPE	V_e (mm^3)	A_e (mm^2)	MASS (g)
T170/110/20	252000	591	≈ 1300
T240/160/20	482000	789	≈ 2500
T350/180/25	1590000	2050	≈
T440/250/25	2380000	2310	≈
T500/240/25	3300000	3100	≈ 19000
T500/300/25	2950000	2450	≈ 16000

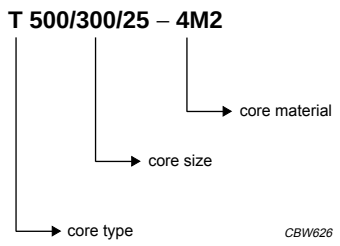

Fig.1 Type number structure for toroids.

RING CORES T170/110/20

Effective core parameters

SYMBOL	PARAMETER	VALUE	UNIT
Σ(l/A)	core factor (C1)	0.722	mm^{-1}
V_e	effective volume	252000	mm^3
l_e	effective length	426	mm
A_e	effective area	591	mm^2
m	mass	≈ 1300	g

Ring core data

GRADE	A_L (nH)	TYPE NUMBER
8C11	≈ 2600	T170/110/20-8C11
4M2	≈	T170/110/20-4M2

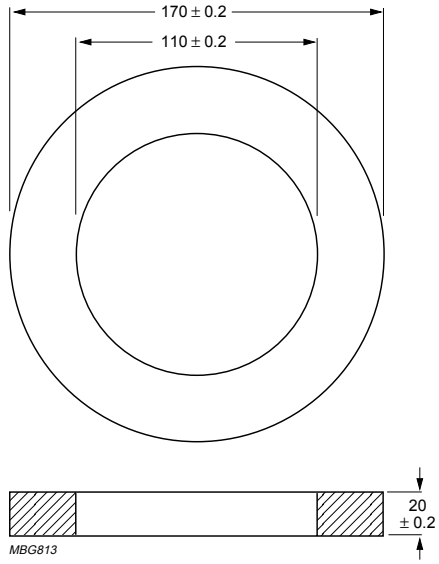

Dimensions in mm.

Fig.2 Ring core T170/110/20.

RING CORE T240/160/20

Effective core parameters

SYMBOL	PARAMETER	VALUE	UNIT
Σ(l/A)	core factor (C1)	0.774	mm^{-1}
V_e	effective volume	482000	mm^3
l_e	effective length	611	mm
A_e	effective area	789	mm^2
m	mass	≈ 2500	g

Ring core data

GRADE	A_L (nH)	TYPE NUMBER
8C11	–	T240/160/20-8C11
4M2		T240/160/20-4M2

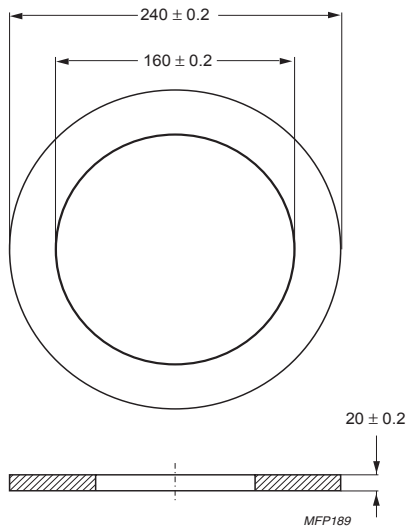

Dimensions in mm.

Fig.3 Ring core T240/160/20.

RING CORE T350/180/25

Effective core parameters

SYMBOL	PARAMETER	VALUE	UNIT
Σ(l/A)	core factor (C1)	0.378	mm^{-1}
V_e	effective volume	1590000	mm^3
l_e	effective length	774	mm
A_e	effective area	2050	mm^2
m	mass	≈	g

Ring core data

GRADE	A_L (nH)	TYPE NUMBER
8C12	≈	T350/180/25-8C12
4M2		T350/180/25-4M2

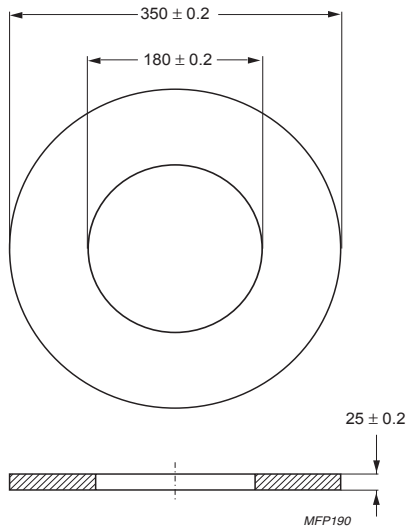

Dimensions in mm.

Fig.4 Ring core T350/180/25.

RING CORE T440/250/25

Effective core parameters

SYMBOL	PARAMETER	VALUE	UNIT
Σ(l/A)	core factor (C1)	0.445	mm^{-1}
V_e	effective volume	2380000	mm^3
l_e	effective length	1030	mm
A_e	effective area	2310	mm^2
m	mass	≈	g

Ring core data

GRADE	A_L (nH)	TYPE NUMBER
8C12	≈	T440/250/25-8C12
4M2		T440/250/25-4M2

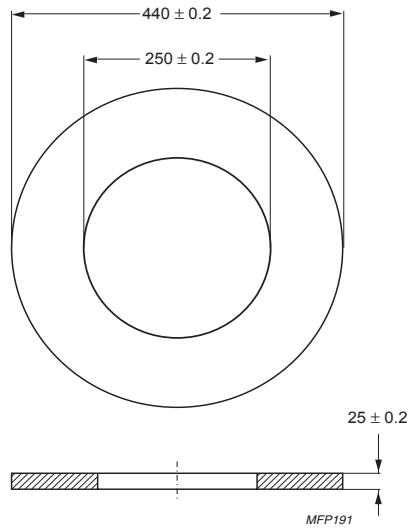

Dimensions in mm.

Fig.5 Ring core T440/250/25.

RING CORE T500/240/25

Effective core parameters

SYMBOL	PARAMETER	VALUE	UNIT
Σ(l/A)	core factor (C1)	0.342	mm^{-1}
V_e	effective volume	3300000	mm^3
l_e	effective length	1060	mm
A_e	effective area	3100	mm^2
m	mass	≈ 19000	g

Ring core data

GRADE	A_L (nH)	TYPE NUMBER
8C12		T500/240/25-8C12
4M2		T500/240/25-4M2

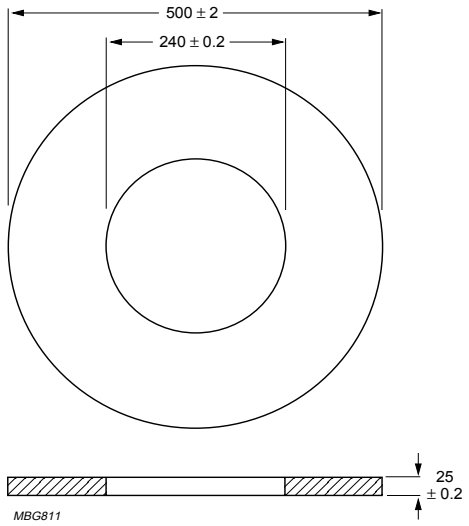

Dimensions in mm.

Fig.6 Ring core T500/240/25.

RING CORE T500/300/25

Effective core parameters

SYMBOL	PARAMETER	VALUE	UNIT
$\Sigma(l/A)$	core factor (C1)	0.492	mm^{-1}
V_e	effective volume	2950000	mm^3
l_e	effective length	1200	mm
A_e	effective area	2450	mm^2
m	mass	≈ 16000	g

Ring core data

GRADE	A_L (nH)	TYPE NUMBER
8C12		T500/300/25-8C12
4M2		T500/300/25-4M2

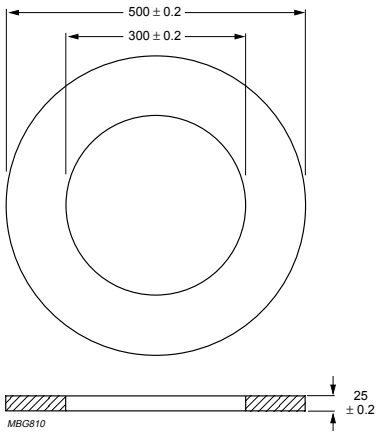

Dimensions in mm.

Fig.7 Ring core T500/300/25.

2. FERRITE BUILDING BLOCKS

Rectangular ferrite blocks can be used for 2 purposes :

- Machining specialty shapes
  Ferrites are hard and brittle materials and difficult to machine (see also next section). Normally FERROXCUBE will do this job.
- Building large structures
  Blocks can be combined to create magnetic structures e.g. equivalent to U or E core sets. Maximum block size is 270 x 250 x 75 mm if the material has to be fired in another atmosphere than pure air. Blocks can be used to create larger “cores”, in a simple and flexible way.

Blocks are ground on all sides to a tolerance of ± 0.1 mm, with special attention to parallel and perpendicular surfaces.

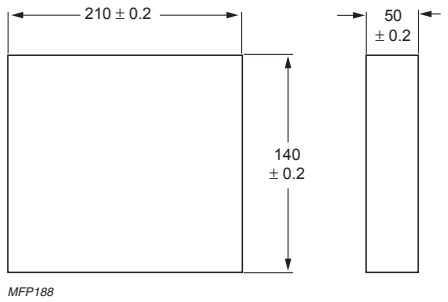

Fig.8 Block core BLK210/140/50-8C11

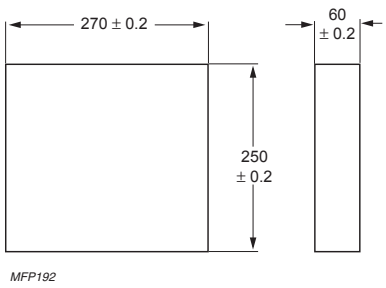

Fig.9 Block core BLK270/250/60-8C11

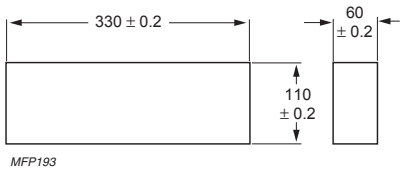

Fig.10 Block core BLK330/110/60-8C11

3. MACHINED FERRITES AND SPECIALTY SHAPES

We stock most of our material grades in blocks and are able to machine numerous prototype cores. Very close tolerances can be realized if required.

Ferrites, being very hard and brittle are difficult to work. The machining and grinding of ferrites and similar materials to micron precision, places stringent requirements on machines and men. To attain optimum standards requires close cooperation between us, the manufacturers of the machines and the machine tools we use.

There are several reasons to choose machined ferrite cores.
1. Only a limited number of cores is needed and it is not worthwhile to make a tool at all.
2. Tolerances required are so tight that machining is the only viable solution.
3. Shape is so complicated that it can't be pressed.
4. Samples are required prior to making a tool.

The drawings provide a good impression of the variety of cores we have produced. For some of the cores we also have pressing tools available.

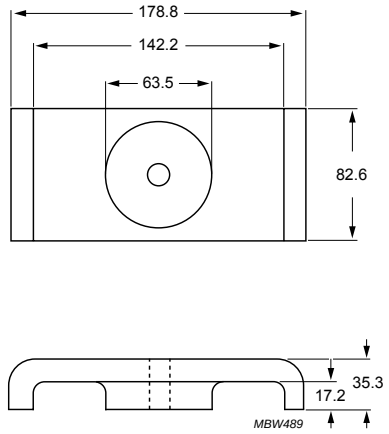

ER type core

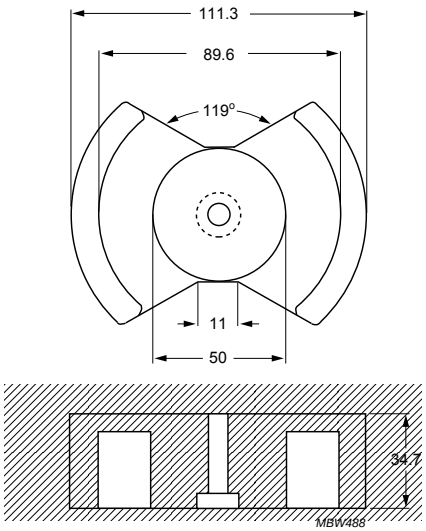

PM type core.

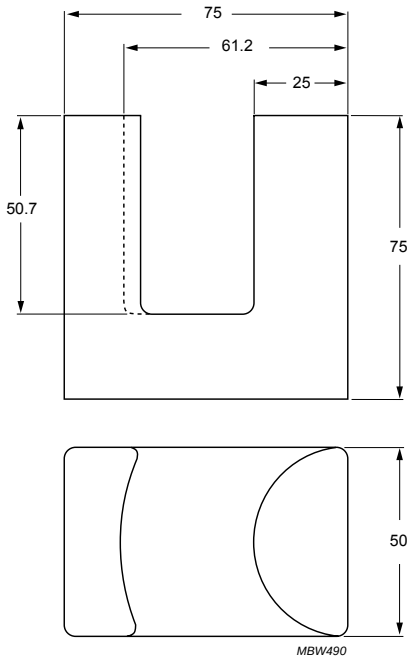

Quarter part of an ETD150 core set.

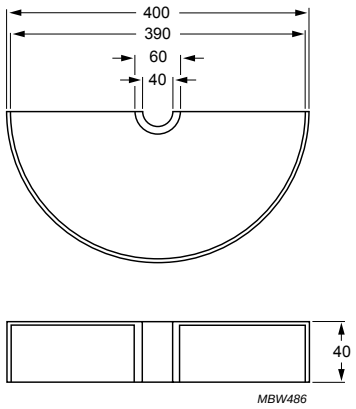

Huge P core section

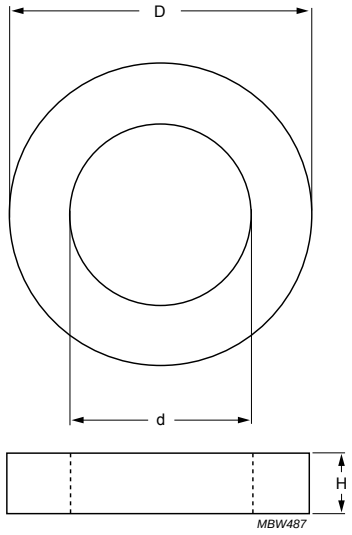

Example of large ring cores:
T90/40/35, T120/60/35, T130/80/35

4. FERRITE IN ANECHOIC CHAMBERS FOR EMI MEASUREMENT (TILES)

The application

Regulations are in place for every kind of electromagnetic interference from equipment. Especially free field radiation limits would require outdoor testing and would need a lot of space. This can be overcome with the help of anechoic chambers. They have walls with a very low reflection and thus approach outdoor testing. Ferrite tiles are a compact alternative to large carbon pyramid absorbers, to reduce the size of EMI test chambers.

Our product range

The absorber material 4S60 has been designed for broadband operation (up to 1000 MHz). Its parameters were matched to achieve low reflection of incident waves. The high-frequency losses of the ferrite do the rest of the job as the wave travels up and down the tile. See the material specification section for all characteristics of 4S60.
Common tile size is 100 x 100 mm, available with and without hole for screw mounting and gluing respectively. All sides are ground to tight tolerances to achieve flatness and squareness for optimum performance of the tiled chamber walls.

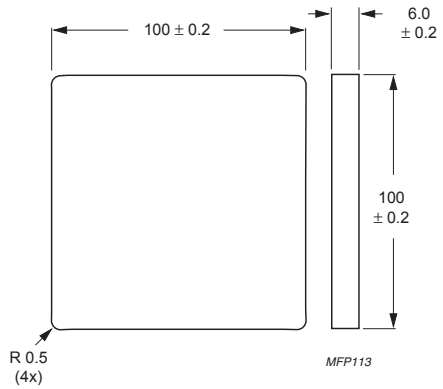

Fig.11 Plate PLT100/100/6-4S60.

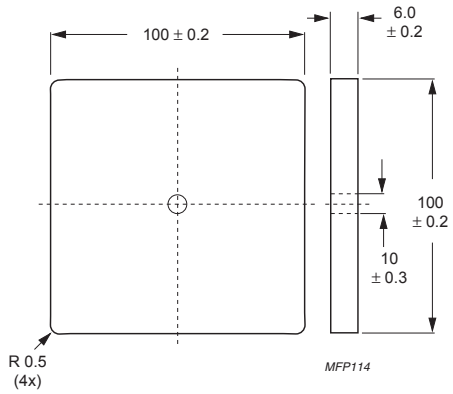

Fig.12 Plate PLT100/100/6/H-4S60

Soft Ferrites

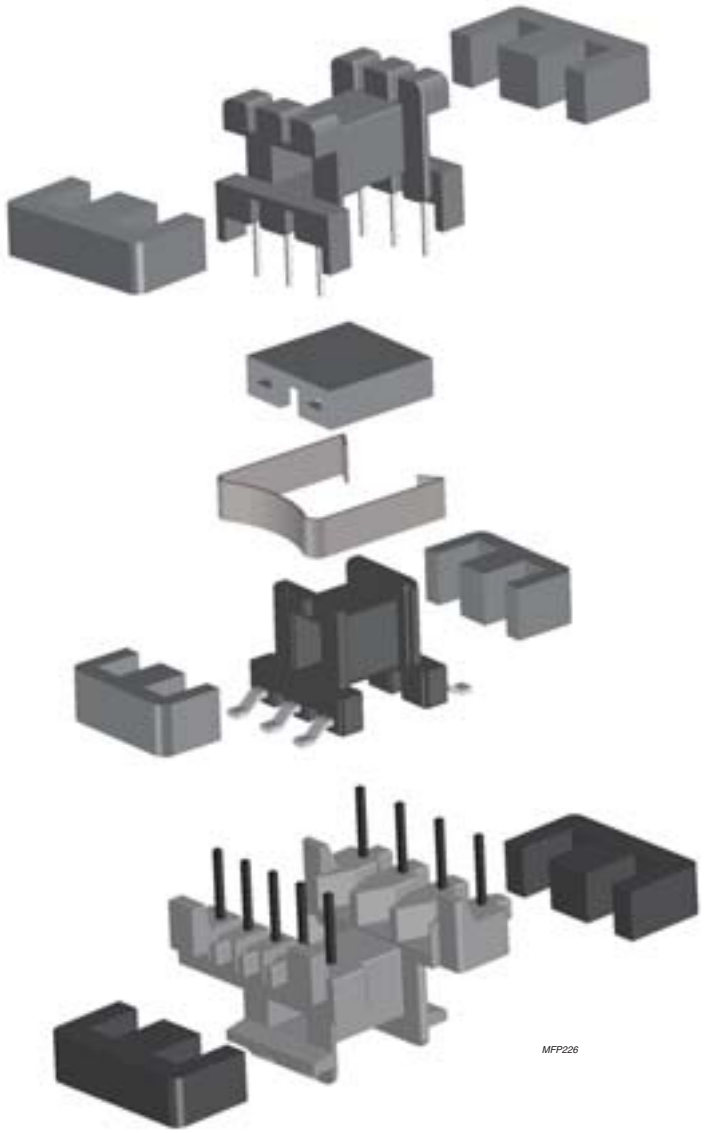
MFP226

PRODUCT OVERVIEW AND TYPE NUMBER STRUCTURE

Product overview E cores

CORE TYPE	V_e (mm^3)	A_e (mm^2)	MASS (g)
E5.3/2.7/2	33.3	2.66	0.08
E6.3/2.9/2	40.6	3.30	0.12
E8.8/4.1/2	78.0	5.00	0.25
E13/6/3	281	10.1	0.7
E13/6/6	559	20.2	1.4
E13/7/4	369	12.4	0.9
E16/8/5	750	20.1	2.0
E16/12/5	1070	19.4	2.6
E19/8/5	900	22.6	2.3
E19/8/9	1650	41.3	4.0
E20/10/5	1340	31.2	4.0
E20/10/6	1490	32.0	3.7
E20/14/5	1513	24.4	4.2
E25/10/6	1930	37.0	4.8
E25/13/7	2990	52.0	8.0
E25/13/11	4500	78.4	11
E30/15/7	4000	60.0	11
E31/13/9	5150	83.2	13
E32/16/9	6180	83.0	16
E34/14/9	5590	80.7	14
E35/18/10	8070	100	15
E36/21/12	12160	126	31
E41/17/12	11500	149	30
E42/21/15	17300	178	44
E42/21/20	22700	233	56
E42/33/20	34200	236	82
E47/20/16	20800	234	53
E55/28/21	44000	353	108
E55/28/25	52000	420	130
E56/24/19	36000	337	90
E65/32/27	79000	540	205
E71/33/32	102000	683	260
E80/38/20	72300	392	180
E100/60/28	202000	738	493

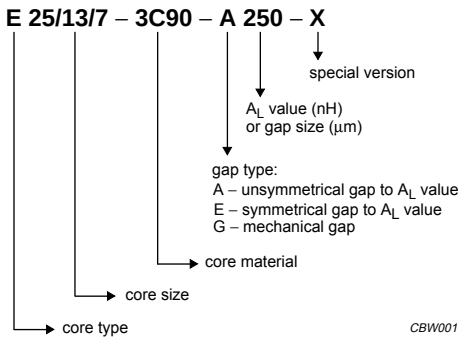

Fig.1 Type number structure for cores.

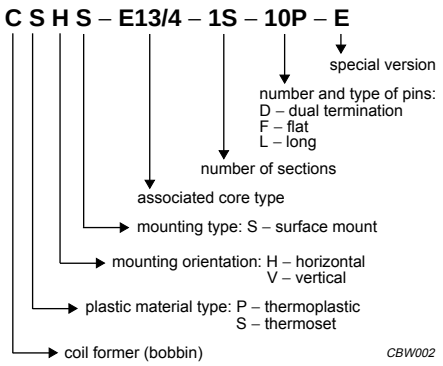

Fig.2 Type number structure for coil formers.

- In accordance with IEC 62317, part 8.

CORE SETS

Effective core parameters

SYMBOL	PARAMETER	VALUE	UNIT
Σ(l/A)	core factor (C1)	4.70	mm^{-1}
V_e	effective volume	33.3	mm^3
l_e	effective length	12.5	mm
A_e	effective area	2.66	mm^2
A_{min}	minimum area	2.63	mm^2
m	mass of core half	≈ 0.08	g

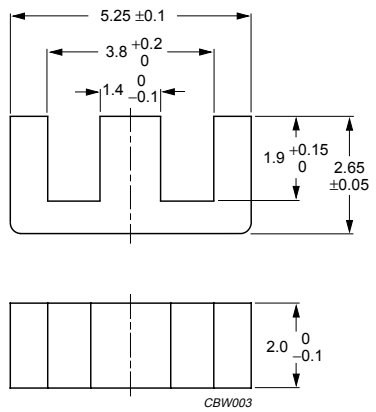

Dimensions in mm.

Fig.1 E5.3/2.7/2 core half.

Core halves for general purpose transformers and power applications

Clamping force for A_L measurements, 5 ±2 N.

GRADE	A_L (nH)	μ_e	AIR GAP (μm)	TYPE NUMBER
3C96 des	275 ±25%	≈ 1030	≈ 0	E5.3/2.7/2-3C96
3F3	265 ±25%	≈ 990	≈ 0	E5.3/2.7/2-3F3
3F35 des	225 ±25%	≈ 840	≈ 0	E5.3/2.7/2-3F35
3F4 des	165 ±25%	≈ 615	≈ 0	E5.3/2.7/2-3F4

Properties of core sets under power conditions

GRADE	B (mT) at	CORE LOSS (W) at		
	H = 250 A/m; f = 25 kHz; T = 100 °C	f = 100 kHz; $\hat{B}$ = 100 mT; T = 100 °C	f = 100 kHz; $\hat{B}$ = 200 mT; T = 100 °C	f = 400 kHz; $\hat{B}$ = 50 mT; T = 100 °C
3C96	≥340	≤ 0.0024	≤ 0.016	≤ 0.007
3F3	≥300	≤ 0.005	–	≤ 0.008
3F35	≥300	–	–	≤ 0.003
3F4	≥250	–	–	–

Properties of core sets under power conditions (continued)

GRADE	B (mT) at	CORE LOSS (W) at			
	H = 250 A/m; f = 25 kHz; T = 100 °C	f = 500 kHz; $\hat{B}$ = 50 mT; T = 100 °C	f = 500 kHz; $\hat{B}$ = 100 mT; T = 100 °C	f = 1 MHz; $\hat{B}$ = 30 mT; T = 100 °C	f = 3 MHz; $\hat{B}$ = 10 mT; T = 100 °C
3C96	≥340	≤ 0.012	–	–	–
3F3	≥300	–	–	–	–
3F35	≥300	≤ 0.004	≤ 0.035	–	–
3F4	≥250	–	–	≤ 0.01	≤ 0.015

COIL FORMERS

General data

PARAMETER	SPECIFICATION
Coil former material	liquid crystal polymer (LCP), glass reinforced, flame retardant in accordance with *"UL 94V-0"*; UL file number E54705(M)
Pin material	copper-tin alloy (CuSn), tin (Sn) plated
Maximum operating temperature	155 °C, *"IEC 60085"*, class F
Resistance to soldering heat	*"IEC 60068-2-20"*, Part 2, Test Tb, method 1B: 350 °C, 3.5 s
Solderability	*"IEC 60068-2-20"*, Part 2, Test Ta, method 1: 235 °C, 2 s

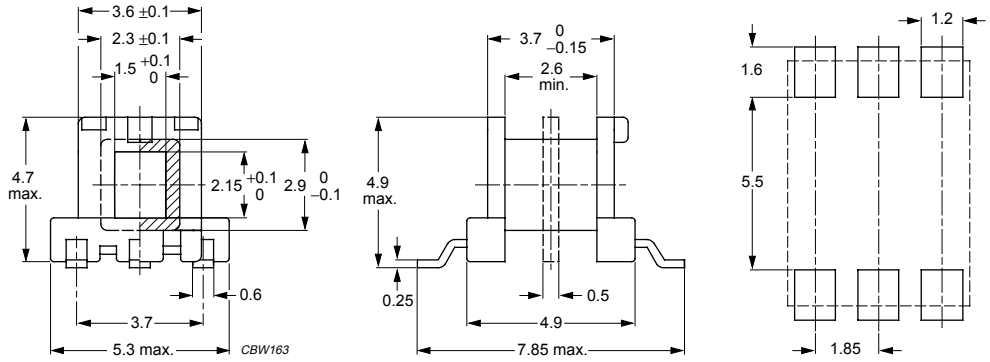

Dimensions in mm.

Fig.2 E5.3/2.7/2 coil former (SMD); 6-solder pads.

Winding data and area product for E5.3/2.7/2 coil former (SMD) with 6 solder pads

NUMBER OF SECTIONS	WINDING AREA (mm^2)	MINIMUM WINDING WIDTH (mm)	AVERAGE LENGTH OF TURN (mm)	AREA PRODUCT Ae x Aw (mm^4)	TYPE NUMBER
1	1.5	2.6	12.6	3.99	CPHS-E5.3/2-1S-4P-Z
1	1.5	2.6	12.6	3.99	CPHS-E5.3/2-1S-6P-Z
2	2×0.6	2×1.0	12.6	2 x 1.60	CPHS-E5.3/2-2S-6P-Z

MOUNTING PARTS

General data for mounting parts

ITEM	REMARKS	FIGURE	TYPE NUMBER
Clamp	stainless steel (CrNi); clamping force ≈5 N	3	CLM-E5.3/2
Cover	liquid crystal polymer (LCP)	4	COV-E5.3/2

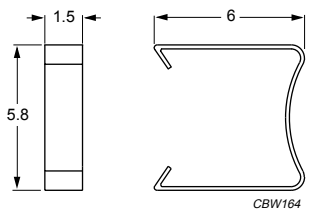

Dimensions in mm.

Fig.3 E5.3/2.7/2 clamp.

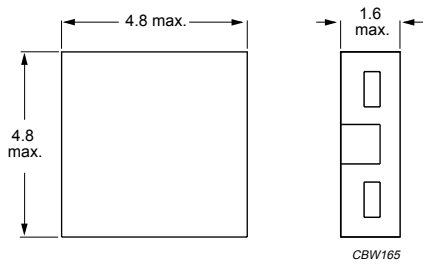

Dimensions in mm.

Fig.4 E5.3/2.7/2 cover.

BLISTER TAPE AND REEL DIMENSIONS

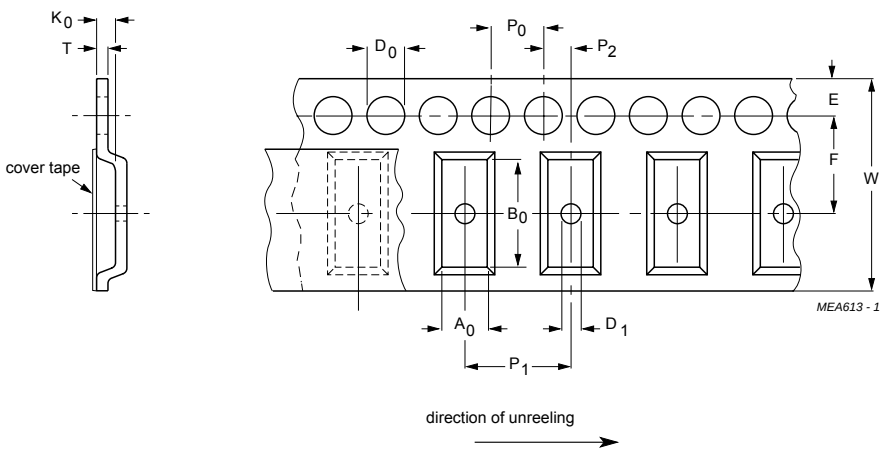

For dimensions see Table 1.

Fig.5 Blister tape.

Table 1 Physical dimensions of blister tape; see Fig.5

SIZE	DIMENSIONS (mm)
A_0	3.0 ±0.1
B_0	5.7 ±0.1
K_0	2.2 ±0.1
T	0.25 ±0.05
W	12.0 ±0.3
E	1.75 ±0.1
F	5.5 ±0.05
D_0	1.5 +0.1
D_1	≥1.5
P_0	4.0 ±0.1
P_1	8.0 ±0.1
P_2	2.0 ±0.1

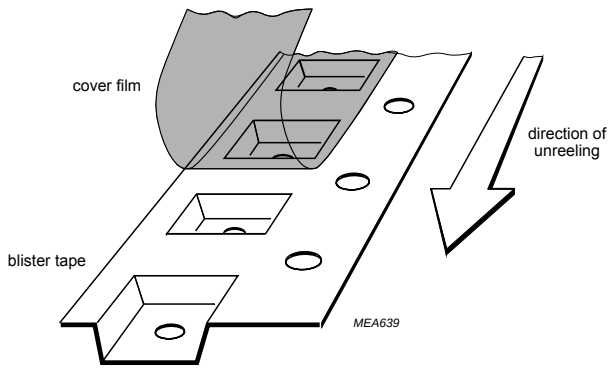

Fig.6 Construction of blister tape.

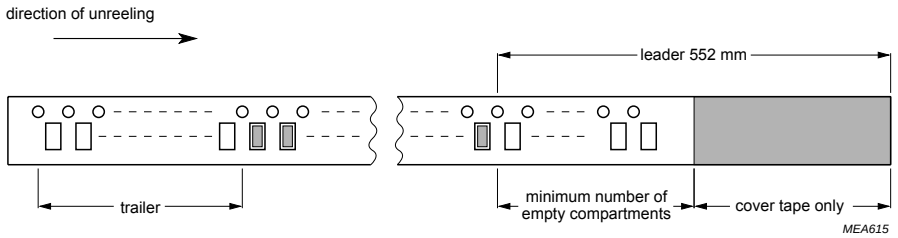

Leader: length of leader tape is 552 mm minimum covered with cover tape.
Trailer: 160 mm minimum (secured with tape).
Storage temperature range for tape: −25 to +45 °C.

Fig.7 Leader/trailer tape.

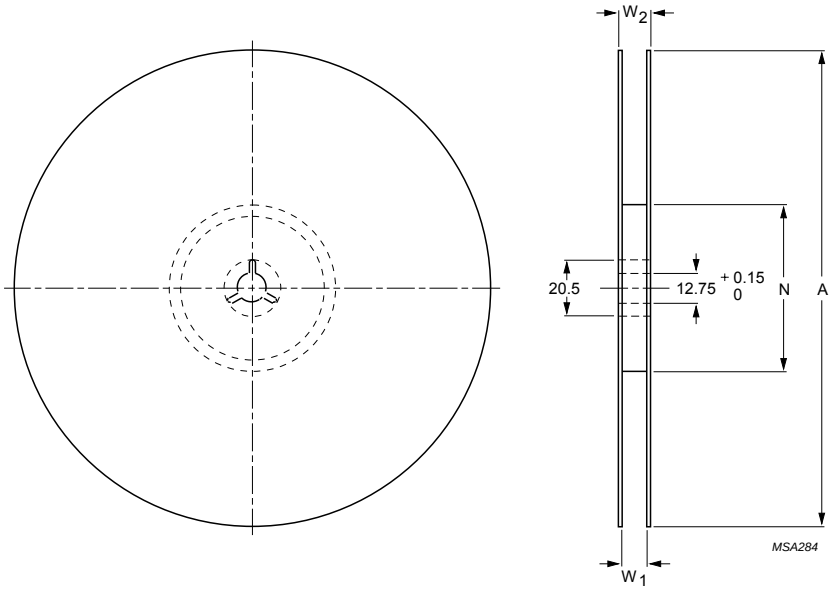

Dimensions in mm.
For dimensions see Table 2.

Fig.8 Reel.

Table 2 Reel dimensions; see Fig.8

SIZE	DIMENSIONS (mm)			
	A	**N**	**W_1**	**W_2**
12	330	100 ±5	12.4	≤16.4

CORE SETS

Effective core parameters

SYMBOL	PARAMETER	VALUE	UNIT
$\Sigma(l/A)$	core factor (C1)	3.67	mm^{-1}
V_e	effective volume	40.6	mm^3
l_e	effective length	12.2	mm
A_e	effective area	3.3	mm^2
A_{min}	minimum area	2.6	mm^2
m	mass of core half	≈ 0.12	g

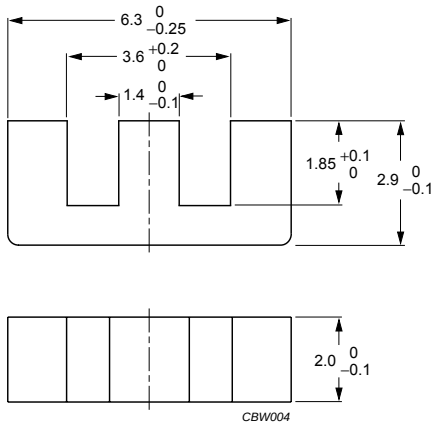

Dimensions in mm.

Fig.1 E6.3/2.9/2 core half.

Core halves for general purpose transformers and power applications

Clamping force for A_L measurements, 5 ±2 N.

GRADE	A_L (nH)	μ_e	AIR GAP (μm)	TYPE NUMBER
3C96 des	380 ±25%	≈ 1110	≈ 0	E6.3/2.9/2-3C96
3F3	360 ±25%	≈ 1050	≈ 0	E6.3/2.9/2-3F3
3F35 des	300 ±25%	≈ 875	≈ 0	E6.3/2.9/2-3F35
3F4 des	225 ±25%	≈ 660	≈ 0	E6.3/2.9/2-3F4

Properties of core sets under power conditions

GRADE	B (mT) at	CORE LOSS (W) at		
	H = 250 A/m; f = 25 kHz; T = 100 °C	f = 100 kHz; $\hat{B}$ = 100 mT; T = 100 °C	f = 100 kHz; $\hat{B}$ = 200 mT; T = 100 °C	f = 400 kHz; $\hat{B}$ = 50 mT; T = 100 °C
3C96	≥340	≤ 0.003	≤ 0.02	≤ 0.008
3F3	≥300	≤ 0.007	–	≤ 0.01
3F35	≥300	–	–	≤ 0.004
3F4	≥250	–	–	–

Properties of core sets under power conditions (continued)

GRADE	B (mT) at	CORE LOSS (W) at			
	H = 250 A/m; f = 25 kHz; T = 100 °C	f = 500 kHz; $\hat{B}$ = 50 mT; T = 100 °C	f = 500 kHz; $\hat{B}$ = 100 mT; T = 100 °C	f = 1 MHz; $\hat{B}$ = 30 mT; T = 100 °C	f = 3 MHz; $\hat{B}$ = 10 mT; T = 100 °C
3C96	≥340	≤ 0.015	–	–	–
3F3	≥300	–	–	–	–
3F35	≥300	≤ 0.005	≤ 0.045	–	–
3F4	≥250	–	–	≤ 0.012	≤ 0.019

COIL FORMERS

General data

PARAMETER	SPECIFICATION
Coil former material	liquid crystal polymer (LCP), glass reinforced, flame retardant in accordance with *"UL 94V-0"*; UL file number E54705(M)
Pin material	copper-tin alloy (CuSn), tin (Sn) plated
Maximum operating temperature	155 °C, *"IEC 60085"*, class F
Resistance to soldering heat	*"IEC 60068-2-20"*, Part 2, Test Tb, method 1B: 350 °C, 3.5 s
Solderability	*"IEC 60068-2-20"*, Part 2, Test Ta, method 1: 235 °C, 2 s

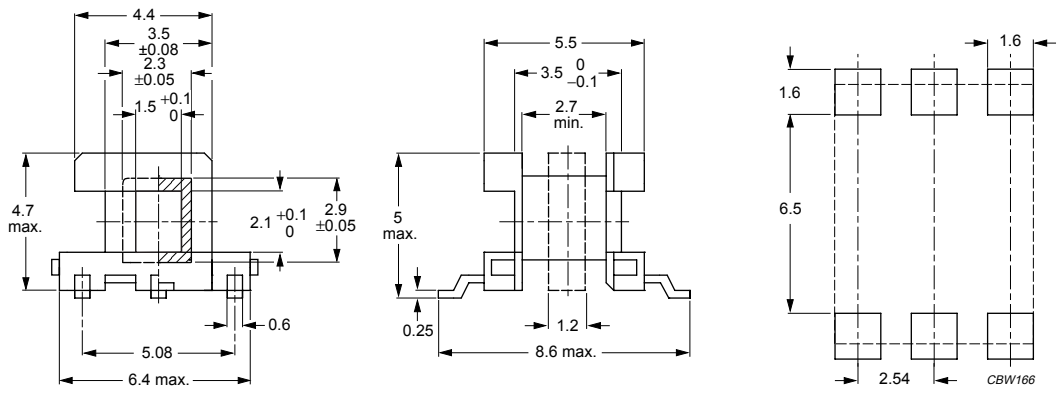

Dimensions in mm.

Fig.2 E6.3/2.9/2 coil former (SMD); 6-solder pads.

Winding data and area product for E6.3/2.9/2 coil former (SMD) with 6 solder pads

NUMBER OF SECTIONS	WINDING AREA (mm^2)	MINIMUM WINDING WIDTH (mm)	AVERAGE LENGTH OF TURN (mm)	AREA PRODUCT Ae x Aw (mm^4)	TYPE NUMBER
1	1.62	2.7	12.8	5.35	CPHS-E6.3/2-1S-4P-Z
1	1.62	2.7	12.8	5.35	CPHS-E6.3/2-1S-6P-Z
2	2×0.45	2×0.75	12.8	2 x 1.49	CPHS-E6.3/2-2S-4P-Z
2	2×0.45	2×0.75	12.8	2 x 1.49	CPHS-E6.3/2-2S-6P-Z

MOUNTING PARTS

General data for mounting parts

ITEM	REMARKS	FIGURE	TYPE NUMBER
Cover	liquid crystal polymer (LCP)	3	COV-E6.3/2

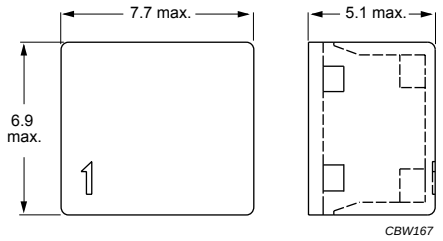

Dimensions in mm.

Fig.3 E6.3/2.9/2 cover.

BLISTER TAPE AND REEL DIMENSIONS

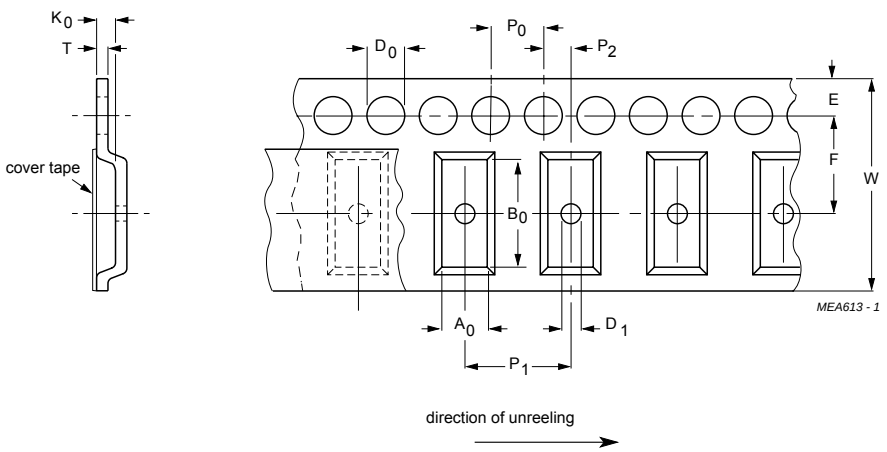

For dimensions see Table 1.

Fig.4 Blister tape.

Table 1 Physical dimensions of blister tape; see Fig.4

SIZE	DIMENSIONS (mm)
A_0	3.2 ±0.1
B_0	6.6 ±0.1
K_0	2.1 ±0.1
T	0.25 ±0.05
W	12.0 ±0.3
E	1.75 ±0.1
F	5.5 ±0.05
D_0	1.5 +0.1
D_1	≥1.5
P_0	4.0 ±0.1
P_1	8.0 ±0.1
P_2	2.0 ±0.1

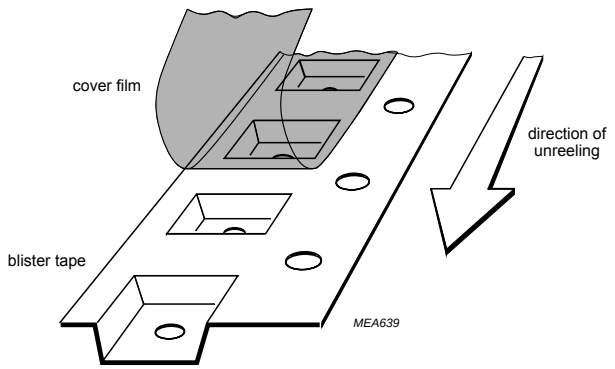

Fig.5 Construction of blister tape.

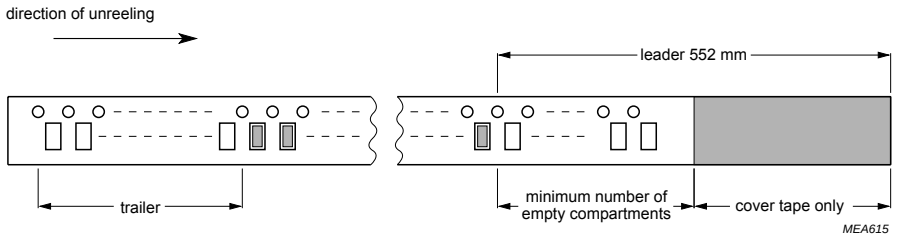

Leader: length of leader tape is 552 mm minimum covered with cover tape.
Trailer: 160 mm minimum (secured with tape).
Storage temperature range for tape: −25 to +45 °C.

Fig.6 Leader/trailer tape.

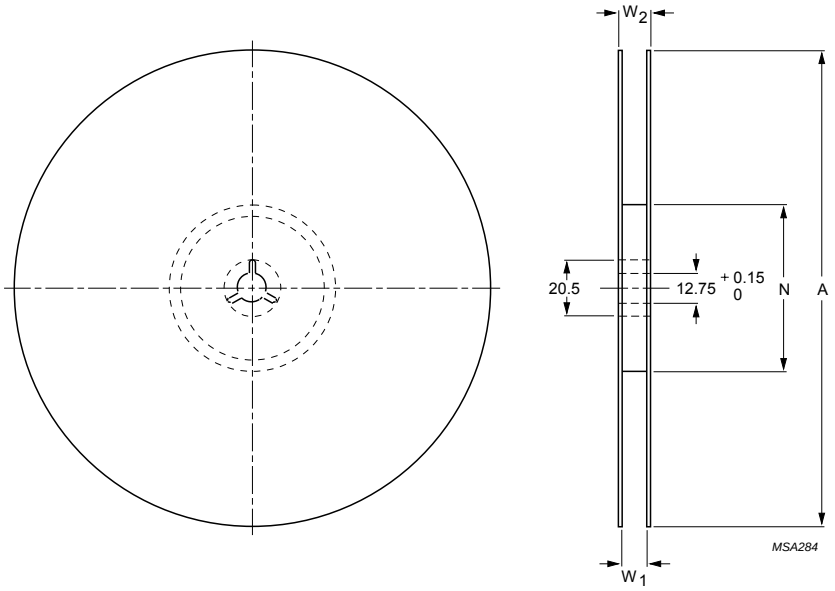

Dimensions in mm.
For dimensions see Table 2.

Fig.7 Reel.

Table 2 Reel dimensions; see Fig.7

SIZE	DIMENSIONS (mm)			
	A	**N**	**W_1**	**W_2**
12	330	100 ±5	12.4	≤16.4

CORE SETS

Effective core parameters

SYMBOL	PARAMETER	VALUE	UNIT
Σ(l/A)	core factor (C1)	3.13	mm^{-1}
V_e	effective volume	78	mm^3
l_e	effective length	15.6	mm
A_e	effective area	5.0	mm^2
A_{min}	minimum area	3.6	mm^2
m	mass of core half	≈ 0.25	g

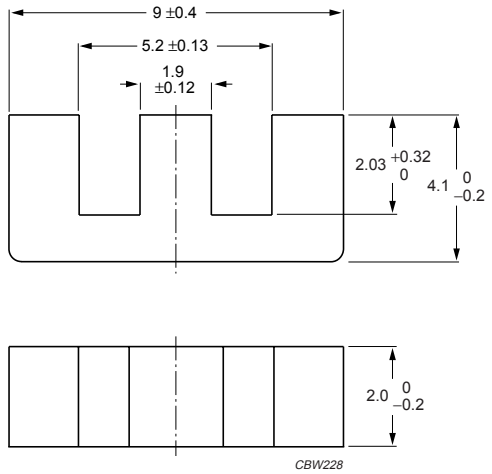

Dimensions in mm.

Fig.1 E8.8/4.1/2 core half.

Core halves

A_L measured in combination with a non-gapped core half, clamping force for A_L measurements, 5 ±2 N.

GRADE	A_L (nH)	μ_e	AIR GAP (μm)	TYPE NUMBER
3C96 des	480 ±25%	≈ 1190	≈ 0	E8.8/4.1/2-3C96
3F3	460 ±25%	≈ 1140	≈ 0	E8.8/4.1/2-3F3
3F35 des	380 ±25%	≈ 940	≈ 0	E8.8/4.1/2-3F35
3F4 des	280 ±25%	≈ 695	≈ 0	E8.8/4.1/2-3F4

Properties of core sets under power conditions

GRADE	B (mT) at	CORE LOSS (W) at		
	H = 250 A/m; f = 25 kHz; T = 100 °C	f = 100 kHz; $\hat{B}$ = 100 mT; T = 100 °C	f = 100 kHz; $\hat{B}$ = 200 mT; T = 100 °C	f = 400 kHz; $\hat{B}$ = 50 mT; T = 100 °C
3C96	≥340	≤ 0.0055	≤ 0.032	≤ 0.014
3F3	≥300	≤ 0.01	–	≤ 0.014
3F35	≥300	–	–	≤ 0.007
3F4	≥250	–	–	–

Properties of core sets under power conditions (continued)

GRADE	B (mT) at	CORE LOSS (W) at			
	H = 250 A/m; f = 25 kHz; T = 100 °C	f = 500 kHz; $\hat{B}$ = 50 mT; T = 100 °C	f = 500 kHz; $\hat{B}$ = 100 mT; T = 100 °C	f = 1 MHz; $\hat{B}$ = 30 mT; T = 100 °C	f = 3 MHz; $\hat{B}$ = 10 mT; T = 100 °C
3C96	≥340	≤ 0.029	–	–	–
3F3	≥300	–	–	–	–
3F35	≥300	≤ 0.011	≤ 0.082	–	–
3F4	≥250	–	–	≤ 0.023	≤ 0.037

CORE SETS

Effective core parameters

SYMBOL	PARAMETER	VALUE	UNIT
$\Sigma(l/A)$	core factor (C1)	2.74	mm^{-1}
V_e	effective volume	281	mm^3
l_e	effective length	27.8	mm
A_e	effective area	10.1	mm^2
A_{min}	minimum area	10.1	mm^2
m	mass of core half	≈ 0.7	g

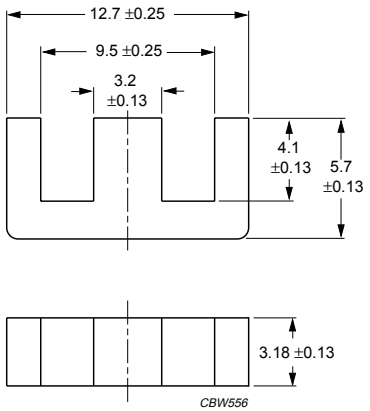

Dimensions in mm.

Fig.1 E13/6/3 core half.

Core halves

A_L measured in combination with a non-gapped core half, clamping force for A_L measurements, 8 ±4 N.

GRADE	A_L (nH)	μ_e	AIR GAP (μm)	TYPE NUMBER
3C90	63 ±5%	≈138	≈ 250	E13/6/3-3C90-A63
	100 ±8%	≈ 219	≈140	E13/6/3-3C90-A100
	160 ±8%	≈ 350	≈ 75	E13/6/3-3C90-A160
	250 ±20%	≈ 548	≈ 40	E13/6/3-3C90-A250
	315 ±20%	≈ 690	≈ 30	E13/6/3-3C90-A315
	730 ±25%	≈1590	≈ 0	E13/6/3-3C90
3C92 des	540 ±25%	≈1180	≈ 0	E13/6/3-3C92
3C94	730 ±25%	≈1590	≈ 0	E13/6/3-3C94
3C96 des	660 ±25%	≈1440	≈ 0	E13/6/3-3C96

Core halves of high permeability grades

A_L measured in combination with an non-gapped core half, clamping force for A_L measurements, 8 ±4 N.

GRADE	A_L (nH)	μ_e	AIR GAP (μm)	TYPE NUMBER
3E27	1300 ±25%	≈ 2830	≈ 0	E13/6/3-3E27

Properties of core sets under power conditions

GRADE	B (mT) at	CORE LOSS (W) at			
	H = 250 A/m; f = 25 kHz; T = 100 °C	f = 25 kHz; $\hat{B}$ = 200 mT; T = 100 °C	f = 100 kHz; $\hat{B}$ = 100 mT; T = 100 °C	f = 100 kHz; $\hat{B}$ = 200 mT; T = 100 °C	f = 500 kHz; $\hat{B}$ = 50 mT; T = 100 °C
3C90	≥ 320	≤ 0.03	≤ 0.03	–	–
3C92	≥ 370	–	≤ 0.022	≤ 0.16	–
3C94	≥ 320	–	≤ 0.024	≤ 0.15	–
3C96	≥ 340	–	≤ 0.019	≤ 0.13	≤ 0.11

CORE SETS

Effective core parameters

SYMBOL	PARAMETER	VALUE	UNIT
$\Sigma(l/A)$	core factor (C1)	1.37	mm^{-1}
V_e	effective volume	559	mm^3
l_e	effective length	27.7	mm
A_e	effective area	20.2	mm^2
A_{min}	minimum area	20.2	mm^2
m	mass of core half	≈ 1.4	g

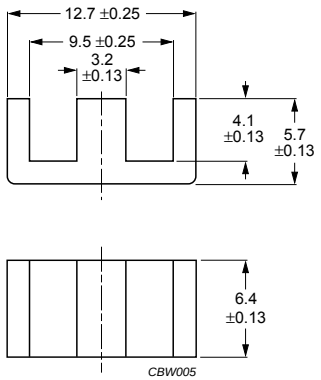

Dimensions in mm.

Fig.1 E13/6/6 core half.

Core halves

A_L measured in combination with a non-gapped core half, clamping force for A_L measurements, 15 ±5 N.

GRADE	A_L (nH)	μ_e	AIR GAP (μm)	TYPE NUMBER
3C90	63 ±5%	≈ 70	≈ 560	E13/6/6-3C90-A63
	100 ±8%	≈ 110	≈ 310	E13/6/6-3C90-A100
	160 ±8%	≈ 175	≈ 175	E13/6/6-3C90-A160
	250 ±20%	≈ 275	≈ 100	E13/6/6-3C90-A250
	315 ±20%	≈ 340	≈ 75	E13/6/6-3C90-A315
	1470 ±25%	≈ 1605	≈ 0	E13/6/6-3C90
3C92 des	1080 ±25%	≈ 1180	≈ 0	E13/6/6-3C92
3C94	1470 ±25%	≈ 1605	≈ 0	E13/6/6-3C94
3C96 des	1250 ±25%	≈ 1360	≈ 0	E13/6/6-3C96
3F3	63 ±5%	≈ 70	≈ 560	E13/6/6-3F3-A63
	100 ±8%	≈ 110	≈ 310	E13/6/6-3F3-A100
	160 ±8%	≈ 175	≈ 175	E13/6/6-3F3-A160
	250 ±20%	≈ 275	≈ 100	E13/6/6-3F3-A250
	315 ±20%	≈ 340	≈ 75	E13/6/6-3F3-A315
	1250 ±25%	≈ 1370	≈ 0	E13/6/6-3F3
3F35 des	1000 ±25%	≈ 1090	≈ 0	E13/6/6-3F35

Core halves of high permeability grades

A_L measured in combination with a non-gapped core half, clamping force for A_L measurements, 15 ±5 N.

GRADE	A_L (nH)	μ_e	AIR GAP (μm)	TYPE NUMBER
3E27	2600 ±25%	≈ 2840	≈ 0	E13/6/6-3E27

Properties of core sets under power conditions

GRADE	B (mT) at	CORE LOSS (W) at			
	H = 250 A/m; f = 25 kHz; T = 100 °C	f = 25 kHz; $\hat{B}$ = 200 mT; T = 100 °C	f = 100 kHz; $\hat{B}$ = 100 mT; T = 100 °C	f = 100 kHz; $\hat{B}$ = 200 mT; T = 100 °C	f = 400 kHz; $\hat{B}$ = 50 mT; T = 100 °C
3C90	≥320	≤ 0.06	≤ 0.06	–	–
3C92	≥370	–	≤ 0.048	≤ 0.33	–
3C94	≥320	–	≤ 0.048	≤ 0.33	–
3C96	≥340	–	≤ 0.037	≤ 0.25	–
3F3	≥320	–	≤ 0.06	–	≤ 0.11
3F35	≥300	–	–	–	–

Properties of core sets under power conditions (continued)

GRADE	B (mT) at	CORE LOSS (W) at			
	H = 250 A/m; f = 25 kHz; T = 100 °C	f = 500 kHz; $\hat{B}$ = 50 mT; T = 100 °C	f = 500 kHz; $\hat{B}$ = 100 mT; T = 100 °C	f = 1 MHz; $\hat{B}$ = 30 mT; T = 100 °C	f = 3 MHz; $\hat{B}$ = 10 mT; T = 100 °C
3C96	≥340	≤ 0.21	–	–	–
3F3	≥315	–	–	–	–
3F35	≥300	≤ 0.075	≤ 0.6	–	–

Note

1. Measured at 60 °C.

COIL FORMERS

General data for E13/6/6 coil former

ITEM	SPECIFICATION
Coil former material	polyamide (PA6.6), glass reinforced, flame retardant in accordance with *"UL 94V-2"*; UL file number E41938(M)
Maximum operating temperature	130 °C, *"IEC 60085"*, class B

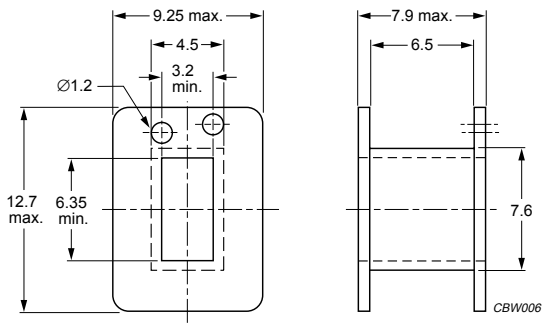

Dimensions in mm.

Fig.2 E13/6/6 coil former.

Winding data and area product for E13/6/6 coil former

NUMBER OF SECTIONS	MINIMUM WINDING AREA (mm^2)	NOMINAL WINDING WIDTH (mm)	AVERAGE LENGTH OF TURN (mm)	AREA PRODUCT Ae x Aw (mm^4)	TYPE NUMBER
1	15.4	6.5	32.0	311	CP-E13/6/6-1S

General data for E13/6/6 coil former

ITEM	SPECIFICATION
Coil former material	polyphenylenesulfide (PPS), glass reinforced, flame retardant in accordance with *"UL 94V-0"*; UL file number E54700
Maximum operating temperature	130 °C, *"IEC 60085"*, class B

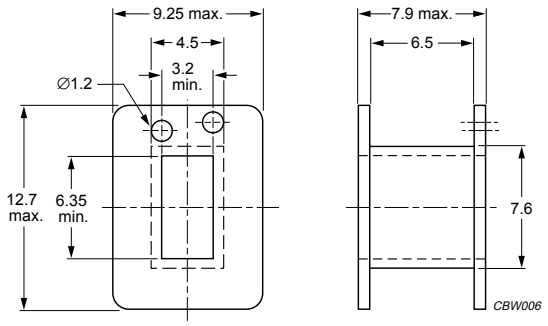

Dimensions in mm.

Fig.3 E13/6/6 coil former.

Winding data and area product for E13/6/6 coil former

NUMBER OF SECTIONS	MINIMUM WINDING AREA (mm^2)	NOMINAL WINDING WIDTH (mm)	AVERAGE LENGTH OF TURN (mm)	AREA PRODUCT Ae x Aw (mm^4)	TYPE NUMBER
1	15.4	6.5	32.0	311	CP-E13/6/6-1S-A

CORE SETS

Effective core parameters

SYMBOL	PARAMETER	VALUE	UNIT
Σ(l/A)	core factor (C1)	2.39	mm^{-1}
V_e	effective volume	369	mm^3
l_e	effective length	29.7	mm
A_e	effective area	12.4	mm^2
A_{min}	minimum area	12.2	mm^2
m	mass of core half	≈ 0.9	g

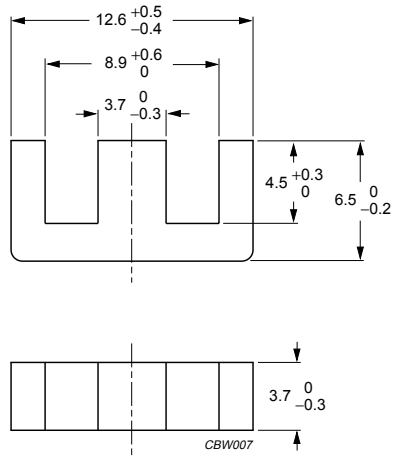

Dimensions in mm.

Fig.1 E13/7/4 core half.

Core halves

A_L measured in combination with a non-gapped core half, clamping force for A_L measurements, 15 ±5 N.

GRADE	A_L (nH)	μ_e	AIR GAP (μm)	TYPE NUMBER
3C90	63 ±5%	≈ 120	≈ 320	E13/7/4-3C90-A63
	100 ±8%	≈ 190	≈ 175	E13/7/4-3C90-A100
	160 ±8%	≈ 305	≈ 100	E13/7/4-3C90-A160
	250 ±15%	≈ 480	≈ 55	E13/7/4-3C90-A250
	315 ±15%	≈ 600	≈ 40	E13/7/4-3C90-A315
	800 ±25%	≈1525	≈ 0	E13/7/4-3C90
3C92 des	630 ±25%	≈ 1200	≈ 0	E13/7/4-3C92
3C94	800 ±25%	≈ 1525	≈ 0	E13/7/4-3C94
3C96 des	700 ±25%	≈ 1330	≈ 0	E13/7/4-3C96
3F3	63 ±5%	≈ 120	≈ 320	E13/7/4-3F3-A63
	100 ±8%	≈ 190	≈ 175	E13/7/4-3F3-A100
	160 ±8%	≈ 305	≈ 100	E13/7/4-3F3-A160
	250 ±15%	≈ 480	≈ 55	E13/7/4-3F3-A250
	315 ±15%	≈ 600	≈ 40	E13/7/4-3F3-A315
	700 ±25%	≈ 1330	≈ 0	E13/7/4-3F3
3F35 des	560 ±25%	≈ 1070	≈ 0	E13/7/4-3F35

Core halves of high permeability grades

Clamping force for A_L measurements, 15 ±5 N.

GRADE	A_L (nH)	μ_e	AIR GAP (μm)	TYPE NUMBER
3E27	1500 ±25%	≈ 2800	≈ 0	E13/7/4-3E27

Properties of core sets under power conditions

GRADE	B (mT) at	CORE LOSS (W) at			
	H = 250 A/m; f = 25 kHz; T = 100 °C	f = 25 kHz; $\hat{B}$ = 200 mT; T = 100 °C	f = 100 kHz; $\hat{B}$ = 100 mT; T = 100 °C	f = 100 kHz; $\hat{B}$ = 200 mT; T = 100 °C	f = 400 kHz; $\hat{B}$ = 50 mT; T = 100 °C
3C90	≥320	≤ 0.05	≤ 0.05	–	–
3C92	≥370	–	≤ 0.04	≤ 0.2	–
3C94	≥320	–	≤ 0.04	≤ 0.2	–
3C96	≥340	–	≤ 0.03	≤ 0.16	–
3F3	≥320	–	≤ 0.05	–	≤ 0.07
3F35	≥300	–	–	–	–

Properties of core sets under power conditions (continued)

GRADE	B (mT) at	CORE LOSS (W) at			
	H = 250 A/m; f = 25 kHz; T = 100 °C	f = 500 kHz; $\hat{B}$ = 50 mT; T = 100 °C	f = 500 kHz; $\hat{B}$ = 100 mT; T = 100 °C	f = 1 MHz; $\hat{B}$ = 30 mT; T = 100 °C	f = 3 MHz; $\hat{B}$ = 10 mT; T = 100 °C
3C90	≥320	–	–	–	–
3C92	≥370	–	–	–	–
3C94	≥320	–	–	–	–
3C96	≥340	≤ 0.14	–	–	–
3F3	≥315	–	–	–	–
3F35	≥300	≤ 0.05	≤ 0.39	–	–

COIL FORMER

General data for 6-pins E13/7/4 coil former

PARAMETER	SPECIFICATION
Coil former material	polyamide (PA6.6), glass reinforced, flame retardant in accordance with *"UL 94V-0";* UL file number E41871(M)
Pin material	copper-tin alloy (CuSn), tin (Sn) plated
Maximum operating temperature	130 °C, *"IEC 60085",* class B
Resistance to soldering heat	*"IEC 60068-2-20"*, Part 2, Test Tb, method 1B, 350 °C, 3.5 s
Solderability	*"IEC 60068-2-20"*, Part 2, Test Ta, method 1, 235 °C, 2 s

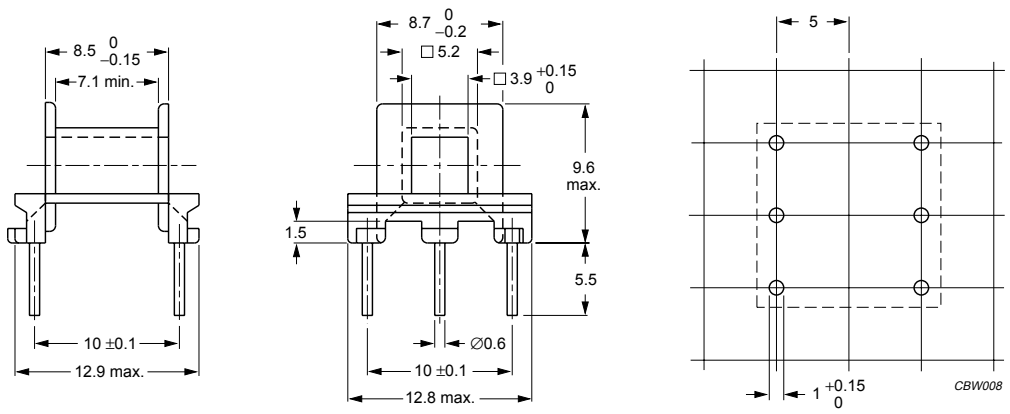

Dimensions in mm.

Fig.2 E13/7/4 coil former; 6-pins.

Winding data and area product for E13/7/4 6-pins coil former

NUMBER OF SECTIONS	WINDING AREA (mm^2)	MINIMUM WINDING WIDTH (mm)	AVERAGE LENGTH OF TURN (mm)	AREA PRODUCT Ae x Aw (mm^4)	TYPE NUMBER
1	11.6	7.1	24	144	CPH-E13/7/4-1S-6P

COIL FORMER

General data for 10-pads E13/7/4 SMD coil former

PARAMETER	SPECIFICATION
Coil former material	phenolformaldehyde (PF), glass reinforced, flame retardant in accordance with *"UL 94V-0"*; UL file number E59481
Pin material	copper-clad steel, tin (Sn) plated
Maximum operating temperature	180 °C, *"IEC 60085"*, class H
Resistance to soldering heat	*"IEC 60068-2-20"*, Part 2, Test Tb, method 1B: 350 °C, 3.5 s
Solderability	*"IEC 60068-2-20"*, Part 2, Test Ta, method 1

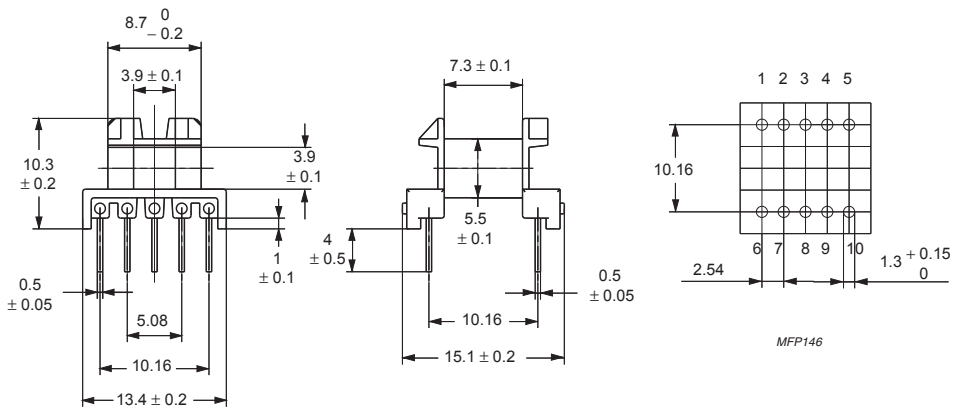

Dimensions in mm.

Fig.3 E13/7/4 SMD coil former .

Winding data and area product for E13/7/4 SMD coil former

NUMBER OF SECTIONS	NUMBER OF PINS	PIN POSITIONS USED	WINDING AREA (mm^2)	MINIMUM WINDING WIDTH (mm)	AVERAGE LENGTH OF TURN (mm)	AREA PRODUCT Ae x Aw (mm^4)	TYPE NUMBER
1	10	all	10.4	7.2	29.6	129	CSH-E13/7/4-1S-10P-C
1	6	1,2,4,5,7,9	10.4	7.2	29.6	129	CSH-E13/7/4-1S-6P-C
1	7	1,2,3,4,5,7,9	10.4	7.2	29.6	129	CSH-E13/7/4-1S-7P-C

CORE SETS

Effective core parameters

SYMBOL	PARAMETER	VALUE	UNIT
Σ(l/A)	core factor (C1)	1.87	mm^{-1}
V_e	effective volume	750	mm^3
l_e	effective length	37.6	mm
A_e	effective area	20.1	mm^2
A_{min}	minimum area	19.3	mm^2
m	mass of core half	≈ 2.0	g

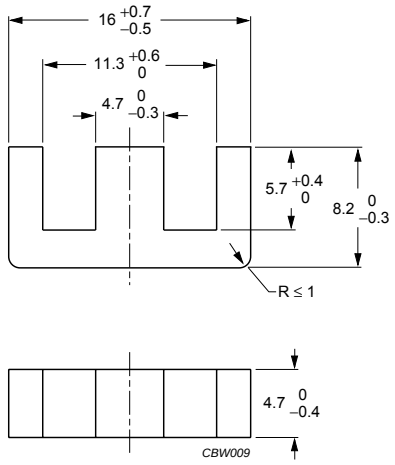

Dimensions in mm.

Fig.1 E16/8/5 core half.

Core halves

A_L measured in combination with a non-gapped core half, clamping force for A_L measurements, 20 ±10 N.

GRADE	A_L (nH)	μ_e	AIR GAP (μm)	TYPE NUMBER
3C90	63 ±5%	≈ 95	≈ 570	E16/8/5-3C90-A63
	100 ±8%	≈ 150	≈ 310	E16/8/5-3C90-A100
	160 ±8%	≈ 240	≈ 170	E16/8/5-3C90-A160
	250 ±15%	≈ 370	≈ 95	E16/8/5-3C90-A250
	315 ±15%	≈ 470	≈ 70	E16/8/5-3C90-A315
	1100 ±25%	≈1640	≈ 0	E16/8/5-3C90
3C92 des	840 ±25%	≈ 1250	≈ 0	E16/8/5-3C92
3C94	1100 ±25%	≈ 1640	≈ 0	E16/8/5-3C94
3C96 des	980 ±25%	≈ 1460	≈ 0	E16/8/5-3C96
3F3	63 ±5%	≈ 95	≈ 570	E16/8/5-3F3-A63
	100 ±8%	≈ 150	≈ 310	E16/8/5-3F3-A100
	160 ±8%	≈ 240	≈ 170	E16/8/5-3F3-A160
	250 ±15%	≈ 370	≈ 95	E16/8/5-3F3-A250
	315 ±15%	≈ 470	≈ 70	E16/8/5-3F3-A315
	980 ±25%	≈ 1460	≈ 0	E16/8/5-3F3
3F35 des	760 ±25%	≈ 1130	≈ 0	E16/8/5-3F35

Core halves of high permeability grades

Clamping force for A_L measurements, 20 ±10 N.

GRADE	A_L (nH)	μ_e	AIR GAP (μm)	TYPE NUMBER
3E27	2200 ±25%	≈ 3300	≈ 0	E16/8/5-3E27

Properties of core sets under power conditions

GRADE	B (mT) at	CORE LOSS (W) at			
	H = 250 A/m; f = 25 kHz; T = 100 °C	f = 25 kHz; $\hat{B}$ = 200 mT; T = 100 °C	f = 100 kHz; $\hat{B}$ = 100 mT; T = 100 °C	f = 100 kHz; $\hat{B}$ = 200 mT; T = 100 °C	f = 400 kHz; $\hat{B}$ = 50 mT; T = 100 °C
3C90	≥320	≤ 0.1	≤ 0.1	–	–
3C92	≥370	–	≤ 0.075	≤ 0.38	–
3C94	≥320	–	≤ 0.075	≤ 0.38	–
3C96	≥340	–	≤ 0.055	≤ 0.3	–
3F3	≥320	–	≤ 0.1	–	≤ 0.15
3F35	≥300	–	–	–	–

Properties of core sets under power conditions (continued)

GRADE	B (mT) at	CORE LOSS (W) at			
	H = 250 A/m; f = 25 kHz; T = 100 °C	f = 500 kHz; $\hat{B}$ = 50 mT; T = 100 °C	f = 500 kHz; $\hat{B}$ = 100 mT; T = 100 °C	f = 1 MHz; $\hat{B}$ = 30 mT; T = 100 °C	f = 3 MHz; $\hat{B}$ = 10 mT; T = 100 °C
3C90	≥320	–	–	–	–
3C92	≥370	–	–	–	–
3C94	≥320	–	–	–	–
3C96	≥340	≤ 0.28	–	–	–
3F3	≥315	–	–	–	–
3F35	≥300	≤ 0.1	≤ 0.8	–	–

COIL FORMER

General data for 6-pins E16/8/5 coil former

PARAMETER	SPECIFICATION
Coil former material	polyamide (PA6.6), glass reinforced, flame retardant in accordance with *"UL 94V-0"*; UL file number E41871(M)
Pin material	copper-tin alloy (CuSn), tin (Sn) plated
Maximum operating temperature	130 °C, *"IEC 60085"*, class B
Resistance to soldering heat	*"IEC 60068-2-20"*, Part 2, Test Tb, method 1B, 350 °C, 3.5 s
Solderability	*"IEC 60068-2-20"*, Part 2, Test Ta, method 1, 235 °C, 2 s

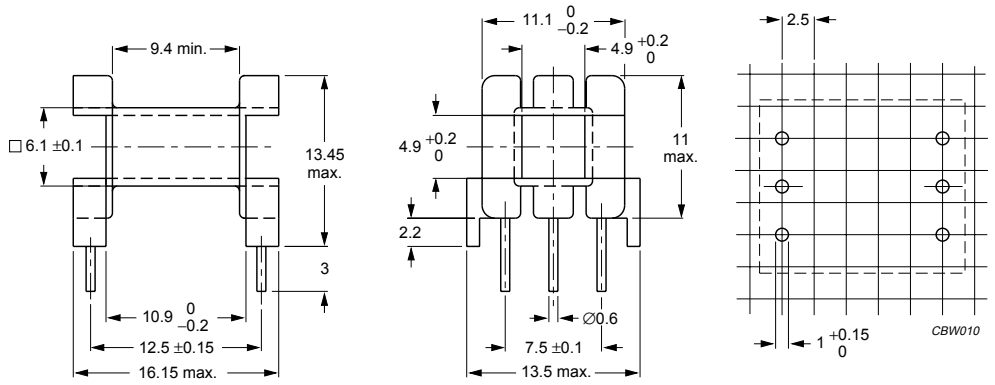

Dimensions in mm.

Fig.2 E16/8/5 coil former; 6-pins.

Winding data and area product for 6-pins E16/8/5 coil former

NUMBER OF SECTIONS	WINDING AREA (mm^2)	MINIMUM WINDING WIDTH (mm)	AVERAGE LENGTH OF TURN (mm)	AREA PRODUCT Ae x Aw (mm^4)	TYPE NUMBER
1	21.6	9.4	33	434	CPH-E16/8/5-1S-6P-Z

COIL FORMER

General data for 9-pins E16/8/5 coil former

PARAMETER	SPECIFICATION
Coil former material	phenolformaldehyde (PF), glass reinforced, flame retardant in accordance with *"UL 94V-0";* UL file number E41429 (M)
Pin material	copper-clad steel, tin (Sn) plated
Maximum operating temperature	180 °C, *"IEC 60085",* class H
Resistance to soldering heat	*"IEC 60068-2-20"*, Part 2, Test Tb, method 1B, 350 °C, 3.5 s
Solderability	*"IEC 60068-2-20"*, Part 2, Test Ta, method 1, 235 °C, 2 s

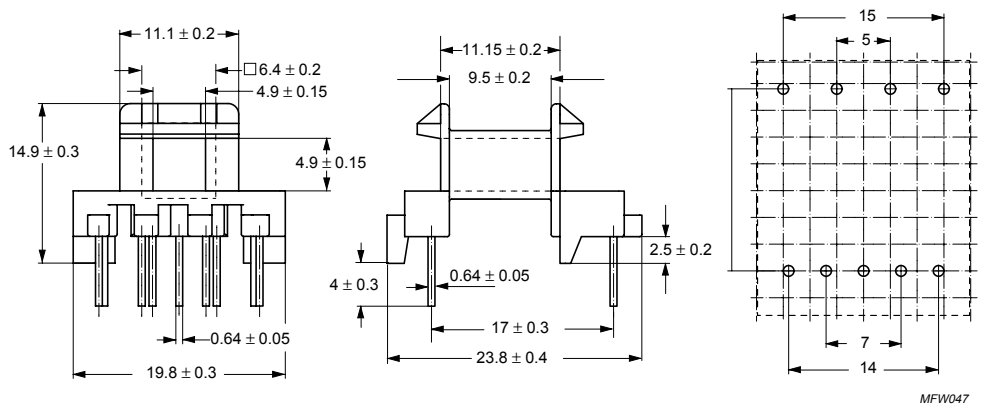

Dimensions in mm.

Fig.3 E16/8/5 coil former; 9-pins.

Winding data and area product for 9-pins E16/8/5 coil former; note 1

NUMBER OF SECTIONS	WINDING AREA (mm^2)	MINIMUM WINDING WIDTH (mm)	AVERAGE LENGTH OF TURN (mm)	AREA PRODUCT Ae x Aw (mm^4)	TYPE NUMBER
1	20.2	9.6	35	406	CSH-E16/8/5-1S-9P

Note

1. This coil former is optimized for the use of triple-isolated wire. This wire is approved for safety isolation without the usual creepage distance.

CORE SETS

Effective core parameters

SYMBOL	PARAMETER	VALUE	UNIT
$\Sigma(l/A)$	core factor (C1)	2.85	mm^{-1}
V_e	effective volume	1070	mm^3
l_e	effective length	55.3	mm
A_e	effective area	19.4	mm^2
A_{min}	minimum area	19.4	mm^2
m	mass of core half	≈ 2.6	g

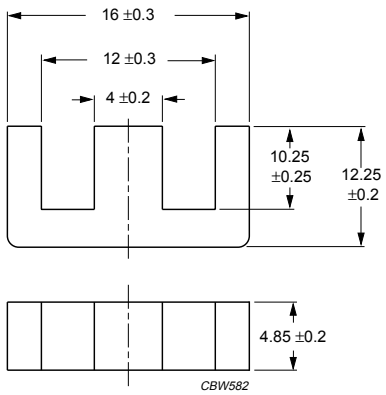

Dimensions in mm.

Fig.1 E16/12/5 core half.

Core halves

A_L measured in combination with a non-gapped core half, clamping force for A_L measurements, 20 ±10 N.
Gapped cores available on request.

GRADE	A_L (nH)	μ_e	AIR GAP (μm)	TYPE NUMBER
3C90	800 ±25%	≈ 1810	≈ 0	E16/12/5-3C90
3C92 des	580 ±25%	≈ 1320	≈ 0	E16/12/5-3C92

Core halves of high permeability grades

Clamping force for A_L measurements, 20 ±10 N.

GRADE	A_L (nH)	μ_e	AIR GAP (μm)	TYPE NUMBER
3E26	2000 ±25%	≈ 4530	≈ 0	E16/12/5-3E26

Properties of core sets under power conditions

GRADE	B (mT) at	CORE LOSS (W)at		
	H = 250 A/m; f = 25 kHz; T = 100 °C	f = 25 kHz; $\hat{B}$ = 200 mT; T = 100 °C	f = 100 kHz; $\hat{B}$ = 100 mT; T = 100 °C	f = 100 kHz; $\hat{B}$ = 200 mT; T = 100 °C
3C90	≥ 315	≤ 0.13	≤ 0.14	–
3C92	≥ 370	–	≤ 0.1	≤ 0.65

CORE SETS

Effective core parameters

SYMBOL	PARAMETER	VALUE	UNIT
$\Sigma(l/A)$	core factor (C1)	1.77	mm^{-1}
V_e	effective volume	900	mm^3
l_e	effective length	39.9	mm
A_e	effective area	22.6	mm^2
A_{min}	minimum area	22.1	mm^2
m	mass of core half	≈ 2.3	g

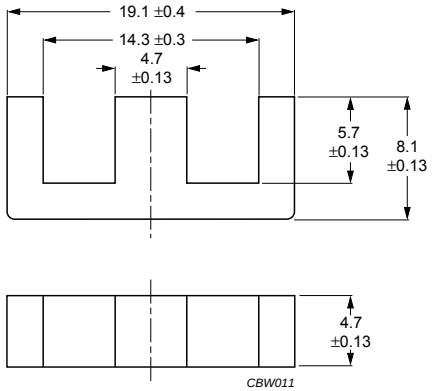

Dimensions in mm.

Fig.1 E19/8/5 core half.

Core halves

A_L measured in combination with a non-gapped core half, clamping force for A_L measurements, 20 ±10 N.

GRADE	A_L (nH)	μ_e	AIR GAP (μm)	TYPE NUMBER
3C81	63 ±5%	≈ 88	≈ 650	E19/8/5-3C81-A63
	100 ±8%	≈140	≈ 350	E19/8/5-3C81-A100
	160 ±8%	≈ 225	≈ 200	E19/8/5-3C81-A160
	250 ±15%	≈350	≈110	E19/8/5-3C81-A250
	315 ±15%	≈ 440	≈ 80	E19/8/5-3C81-A315
	1500 ±25%	≈ 2110	≈ 0	E19/8/5-3C81
3C90	63 ±5%	≈ 88	≈ 640	E19/8/5-3C90-A63
	100 ±8%	≈140	≈ 350	E19/8/5-3C90-A100
	160 ±8%	≈ 225	≈ 190	E19/8/5-3C90-A160
	250 ±15%	≈ 350	≈110	E19/8/5-3C90-A250
	315 ±15%	≈ 440	≈ 80	E19/8/5-3C90-A315
	1170 ±25%	≈ 1650	≈ 0	E19/8/5-3C90
3C91 des	1500 ±25%	≈ 2110	≈ 0	E19/8/5-3C91
3C92 des	900 ±25%	≈ 1260	≈ 0	E19/8/5-3C92
3C94	1170 ±25%	≈ 1650	≈ 0	E19/8/5-3C94
3C96 des	1000 ±25%	≈ 1400	≈ 0	E19/8/5-3C96

GRADE	A_L (nH)	μ_e	AIR GAP (μm)	TYPE NUMBER
3F3	63 ±5%	≈ 88	≈ 640	E19/8/5-3F3-A63
	100 ±8%	≈140	≈ 330	E19/8/5-3F3-A100
	160 ±8%	≈ 225	≈ 190	E19/8/5-3F3-A160
	250 ±15%	≈ 350	≈ 110	E19/8/5-3F3-A250
	315 ±15%	≈ 440	≈ 80	E19/8/5-3F3-A315
	1000 ±25%	≈ 1400	≈ 0	E19/8/5-3F3
3F35 des	810 ±25%	≈ 1140	≈ 0	E19/8/5-3F35

Core halves of high permeability grades

Clamping force for A_L measurements, 20 ±10 N.

GRADE	A_L (nH)	μ_e	AIR GAP (μm)	TYPE NUMBER
3E27	2300 ±25%	≈ 3230	≈ 0	E19/8/5-3E27

Properties of core sets under power conditions

GRADE	B (mT) at	CORE LOSS (W) at			
	H = 250 A/m; f = 25 kHz; T = 100 °C	f = 25 kHz; $\hat{B}$ = 200 mT; T = 100 °C	f = 100 kHz; $\hat{B}$ = 100 mT; T = 100 °C	f = 100 kHz; $\hat{B}$ = 200 mT; T = 100 °C	f = 400 kHz; $\hat{B}$ = 50 mT; T = 100 °C
3C81	≥320	≤ 0.2	–	–	–
3C90	≥320	≤ 0.09	≤ 0.1	–	–
3C91	≥320	–	≤ 0.064(1)	≤ 0.37(1)	–
3C92	≥370	–	≤ 0.08	≤ 0.45	–
3C94	≥320	–	≤ 0.08	≤ 0.45	–
3C96	≥340	–	≤ 0.064	≤ 0.37	–
3F3	≥320	–	≤ 0.1	–	≤ 0.17
3F35	≥300	–	–	–	–

Properties of core sets under power conditions (continued)

GRADE	B (mT) at	CORE LOSS (W) at			
	H = 250 A/m; f = 25 kHz; T = 100 °C	f = 500 kHz; $\hat{B}$ = 50 mT; T = 100 °C	f = 500 kHz; $\hat{B}$ = 100 mT; T = 100 °C	f = 1 MHz; $\hat{B}$ = 30 mT; T = 100 °C	f = 3 MHz; $\hat{B}$ = 10 mT; T = 100 °C
3C96	≥340	≤ 0.32	–	–	–
3F3	≥315	–	–	–	–
3F35	≥300	≤ 0.12	≤ 0.95	–	–

Note

1. Measured at 60 °C.

COIL FORMERS

General data for E19/8/5 coil former without pins

PARAMETER	SPECIFICATION
Coil former material	polyamide (PA6.6), glass reinforced, flame retardant in accordance with *"UL 94V-2";* UL file number E41938(M)
Maximum operating temperature	130 °C, *"IEC 60085"*, class B

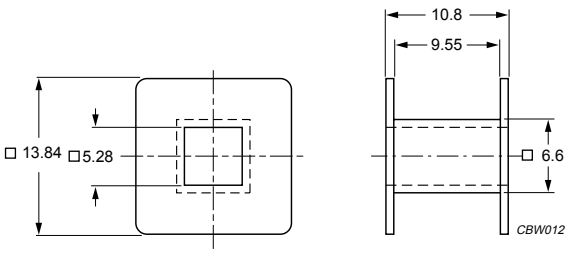

Dimensions in mm.

Fig.2 E19/8/5 coil former.

Winding data and area product for E19/8/5 coil forme without pins

NUMBER OF SECTIONS	MINIMUM WINDING AREA (mm^2)	NOMINAL WINDING WIDTH (mm)	AVERAGE LENGTH OF TURN (mm)	AREA PRODUCT Ae x Aw (mm^4)	TYPE NUMBER
1	33.0	9.5	37.9	746	CP-E19/8/5-1S

General data for 8-pins E19/8/5 coil former

PARAMETER	SPECIFICATION
Coil former material	polyamide (PA6.6), glass reinforced, flame retardant in accordance with UL 94V-0; UL file number E41938(M)
Pin material	copper-zinc alloy (CuZn), tin (Sn) plated
Maximum operating temperature	130 °C, *"IEC 60085"*, class B
Resistance to soldering heat	*"IEC 60068-2-20"*, Part 2, Test Tb, method 1B, 350 °C, 3.5 s
Solderability	*"IEC 60068-2-20"*, Part 2, Test Ta, method 1, 235 °C, 2 s

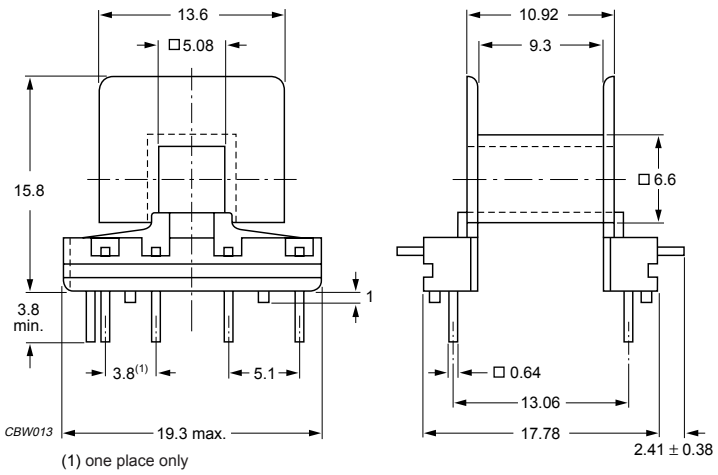

Dimensions in mm.

Fig.3 E19/8/5 coil former; 8-pins.

Winding data and area product for 8-pins E19/8/5 coil former

NUMBER OF SECTIONS	MINIMUM WNDING AREA (mm^2)	NOMINAL WINDING WIDTH (mm)	AVERAGE LENGTH OF TURN (mm)	AREA PRODUCT Ae x Aw (mm^4)	TYPE NUMBER
1	32.3	9.4	40.9	730	CPH-E19/8/5-1S-8PD-Z

CORE SETS

Effective core parameters

SYMBOL	PARAMETER	VALUE	UNIT
$\Sigma(l/A)$	core factor (C1)	0.960	mm^{-1}
V_e	effective volume	1650	mm^3
l_e	effective length	39.9	mm
A_e	effective area	41.3	mm^2
A_{min}	minimum area	41.1	mm^2
m	mass of core half	≈ 4.0	g

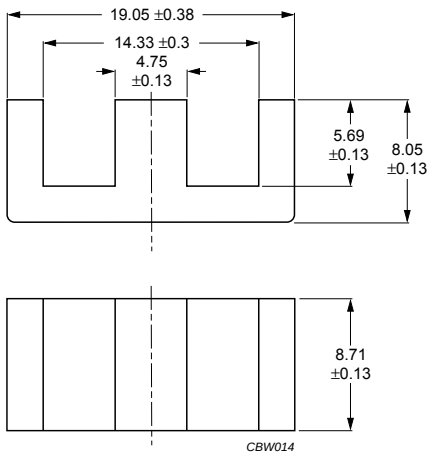

Dimensions in mm.

Fig.1 E19/8/9 core half.

Core halves

A_L measured in combination with a non-gapped core half, clamping force for A_L measurements, 20 ±10 N, unless otherwise stated.

GRADE	A_L (nH)	μ_e	TOTAL AIR GAP (μm)	TYPE NUMBER
3C81	63 ±5%(1)	≈ 48	≈ 1280	E19/8/9-3C81-E63
	100 ±8%(1)	≈ 77	≈ 700	E19/8/9-3C81-E100
	160 ±8%	≈123	≈ 390	E19/8/9-3C81-A160
	250 ±15%	≈ 192	≈ 220	E19/8/9-3C81-A250
	315 ±15%	≈ 242	≈ 170	E19/8/9-3C81-A315
	2740 ±25%	≈ 2680	≈ 0	E19/8/9-3C81
3C90	63 ±5%(1)	≈ 48	≈ 1300	E19/8/9-3C90-E63
	100 ±8%(1)	≈ 77	≈ 700	E19/8/9-3C90-E100
	160 ±8%	≈123	≈ 380	E19/8/9-3C90-A160
	250 ±15%	≈ 192	≈ 220	E19/8/9-3C90-A250
	315 ±15%	≈ 240	≈170	E19/8/9-3C90-A315
	2150 ±25%	≈ 2100	≈ 0	E19/8/9-3C90
3C91 des	2740 ±25%	≈ 2680	≈ 0	E19/8/9-3C91
3C92 des	1640 ±25%	≈ 1250	≈ 0	E19/8/9-3C92
3C94	2150 ±25%	≈ 2100	≈ 0	E19/8/9-3C94
3C96 des	1830 ±25%	≈ 1410	≈ 0	E19/8/9-3C96

GRADE	A_L (nH)	μ_e	TOTAL AIR GAP (μm)	TYPE NUMBER
3F3	63 ±5%[1]	≈ 48	≈ 1300	E19/8/9-3F3-E63
	100 ±8%[1]	≈ 77	≈ 700	E19/8/9-3F3-E100
	160 ±8%	≈123	≈ 380	E19/8/9-3F3-A250
	250 ±15%	≈ 192	≈ 220	E19/8/9-3F3-A315
	315 ±15%	≈ 240	≈170	E19/8/9-3F3-A400
	1830 ±25%	≈ 1410	≈ 0	E19/8/9-3F3
3F35 des	1490 ±25%	≈ 1150	≈ 0	E19/8/9-3F35

Note

1. Measured in combination with an equal gapped core half, clamping force for A_L measurements, 20 ±10 N.

Core halves of high permeability grades

Clamping force for A_L measurements, 20 ±10 N.

GRADE	A_L (nH)	μ_e	AIR GAP (μm)	TYPE NUMBER
3E27	4250 ±25%	≈ 3270	≈ 0	E19/8/9-3E27

Properties of core sets under power conditions

GRADE	B (mT) at	CORE LOSS (W) at			
	H = 250 A/m; f = 25 kHz; T = 100 °C	f = 25 kHz; $\hat{B}$ = 200 mT; T = 100 °C	f = 100 kHz; $\hat{B}$ = 100 mT; T = 100 °C	f = 100 kHz; $\hat{B}$ = 200 mT; T = 100 °C	f = 400 kHz; $\hat{B}$ = 50 mT; T = 100 °C
3C81	≥320	≤ 0.4	–	–	–
3C90	≥320	≤ 0.17	≤ 0.18	–	–
3C91	≥320	–	≤ 0.11[1]	≤ 0.68[1]	–
3C92	≥370	–	≤ 0.14	≤ 0.85	–
3C94	≥320	–	≤ 0.14	≤ 0.85	–
3C96	≥340	–	≤ 0.11	≤ 0.68	–
3F3	≥320	–	≤ 0.18	–	≤ 0.31
3F35	≥300	–	–	–	–

Properties of core sets under power conditions (continued)

GRADE	B (mT) at	CORE LOSS (W) at			
	H = 250 A/m; f = 25 kHz; T = 100 °C	f = 500 kHz; $\hat{B}$ = 50 mT; T = 100 °C	f = 500 kHz; $\hat{B}$ = 100 mT; T = 100 °C	f = 1 MHz; $\hat{B}$ = 30 mT; T = 100 °C	f = 3 MHz; $\hat{B}$ = 10 mT; T = 100 °C
3C96	≥340	≤ 0.6	–	–	–
3F3	≥315	–	–	–	–
3F35	≥300	≤ 0.22	≤ 1.7	–	–

Note

1. Measured at 60 °C.

COIL FORMER

General data for E19/8/9 coil former

PARAMETER	SPECIFICATION
Coil former material	polyamide (PA6.6), glass reinforced, flame retardant in accordance with *"UL 94V-2";* UL file number E41938(M)
Maximum operating temperature	105 °C, *"IEC 60085"*, class A

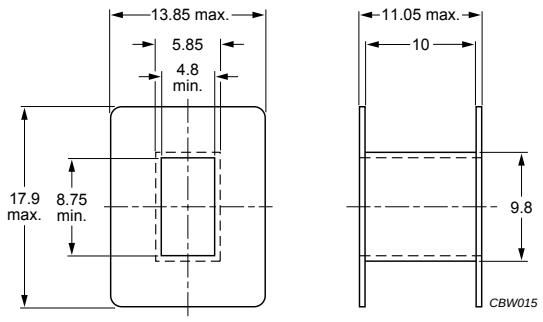

Dimensions in mm.

Fig.2 E19/8/9 coil former.

Winding data and area product for E19/8/9 coil former

NUMBER OF SECTIONS	MINIMUM WINDING AREA (mm^2)	NOMINAL WINDING WIDTH (mm)	AVERAGE LENGTH OF TURN (mm)	AREA PRODUCT Ae x Aw (mm^4)	TYPE NUMBER
1	39.7	10	45.2	1640	CP-E19/8/9-1S

CORE SETS

Effective core parameters

SYMBOL	PARAMETER	VALUE	UNIT
Σ(l/A)	core factor (C1)	1.37	mm^{-1}
V_e	effective volume	1340	mm^3
l_e	effective length	42.8	mm
A_e	effective area	31.2	mm^2
A_{min}	minimum area	25.2	mm^2
m	mass of core half	≈ 4.0	g

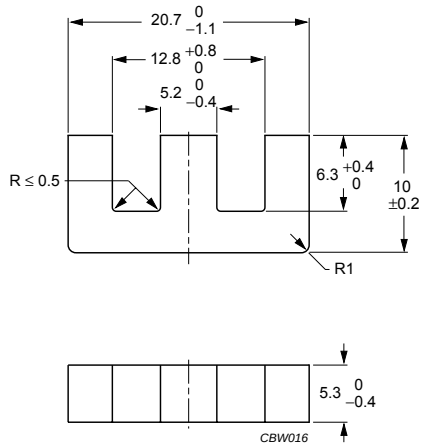

Dimensions in mm.

Fig.1 E20/10/5 core half.

Core halves

Clamping force for A_L measurements, 20 ±10 N.

GRADE	A_L (nH)	μ_e	AIR GAP (μm)	TYPE NUMBER
3C90	63 ±5%	≈ 69	≈ 950	E20/10/5-3C90-A63
	100 ±8%	≈109	≈ 510	E20/10/5-3C90-A100
	160 ±8%	≈175	≈ 280	E20/10/5-3C90-A160
	250 ±15%	≈ 273	≈160	E20/10/5-3C90-A250
	315 ±15%	≈ 344	≈120	E20/10/5-3C90-A315
	1500 ±25%	≈1640	≈ 0	E20/10/5-3C90
3C92 des	1170 ±25%	≈1280	≈ 0	E20/10/5-3C92
3C94	1500 ±25%	≈1640	≈ 0	E20/10/5-3C94
3C96 des	1400 ±25%	≈1530	≈ 0	E20/10/5-3C96
3F3	63 ±5%	≈ 69	≈ 950	E20/10/5-3F3-A63
	100 ±8%	≈ 109	≈ 510	E20/10/5-3F3-A100
	160 ±8%	≈175	≈ 280	E20/10/5-3F3-A160
	250 ±15%	≈ 273	≈160	E20/10/5-3F3-A250
	315 ±15%	≈ 344	≈120	E20/10/5-3F3-A315
	1400 ±25%	≈1530	≈ 0	E20/10/5-3F3
3F35 des	1060 ±25%	≈1160	≈ 0	E20/10/5-3F35

Core halves of high permeability grades

Clamping force for A_L measurements, 20 ±10 N.

GRADE	A_L (nH)	μ_e	AIR GAP (μm)	TYPE NUMBER
3C11	2600 ±25%	≈ 2840	≈ 0	E20/10/5-3C11
3E27	2800 ±25%	≈ 2870	≈ 0	E20/10/5-3E27

Properties of core sets under power conditions

GRADE	B (mT) at	CORE LOSS (W) at			
	H = 250 A/m; f = 25 kHz; T = 100 °C	f = 25 kHz; $\hat{B}$ = 200 mT; T = 100 °C	f = 100 kHz; $\hat{B}$ = 100 mT; T = 100 °C	f = 100 kHz; $\hat{B}$ = 200 mT; T = 100 °C	f = 400 kHz; $\hat{B}$ = 50 mT; T = 100 °C
3C90	≥330	≤ 0.15	≤ 0.17	–	–
3C92	≥370	–	≤ 0.13	≤ 0.7	–
3C94	≥320	–	≤ 0.13	≤ 0.7	–
3C96	≥340	–	≤ 0.1	≤ 0.56	–
3F3	≥320	–	≤ 0.16	–	≤ 0.28
3F35	≥300	–	–	–	–

Properties of core sets under power conditions (continued)

GRADE	B (mT) at	CORE LOSS (W) at			
	H = 250 A/m; f = 25 kHz; T = 100 °C	f = 500 kHz; $\hat{B}$ = 50 mT; T = 100 °C	f = 500 kHz; $\hat{B}$ = 100 mT; T = 100 °C	f = 1 MHz; $\hat{B}$ = 30 mT; T = 100 °C	f = 3 MHz; $\hat{B}$ = 10 mT; T = 100 °C
3C90	≥330	–	–	–	–
3C92	≥370	–	–	–	–
3C94	≥320	–	–	–	–
3C96	≥340	≤ 0.5	–	–	–
3F3	≥320	–	–	–	–
3F35	≥300	≤ 0.18	≤ 1.4	–	–

COIL FORMER

General data for 6-pins E20/10/5 coil former

PARAMETER	SPECIFICATION
Coil former material	polyamide (PA6.6), glass reinforced, flame retardant in accordance with *"UL 94HB"*; UL file number E41871(M)
Pin material	copper-tin alloy (CuSn), tin (Sn) plated
Maximum operating temperature	130 °C, *"IEC 60085"*, class B
Resistance to soldering heat	*"IEC 60068-2-20"*, Part 2, Test Tb, method 1B: 350 °C, 3.5 s
Solderability	*"IEC 60068-2-20"*, Part 2, Test Ta, method 1

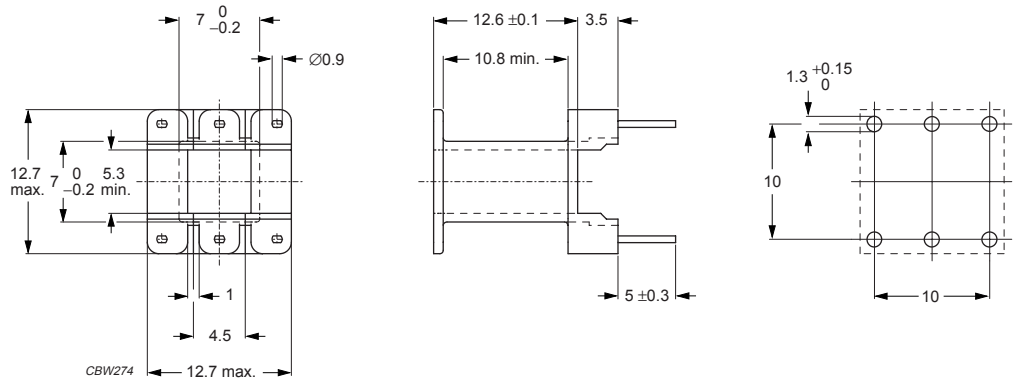

Dimensions in mm.

Fig.2 E20/10/5 coil former; 8-pins.

Winding data and area product for 8-pins E20/10/5 coil former

NUMBER OF SECTIONS	WINDING AREA (mm^2)	MINIMUM WINDING WIDTH (mm)	AVERAGE LENGTH OF TURN (mm)	AREA PRODUCT Ae x Aw (mm^4)	TYPE NUMBER
1	28.6	10.8	38.7	892	CPV-E20/10/5-1S-6P

COIL FORMER

General data for 8-pins E20/10/5 coil former

PARAMETER	SPECIFICATION
Coil former material	phenolformaldehyde (PF), glass reinforced, flame retardant in accordance with *"UL 94V-0"*; UL file number E167521(M)
Pin material	copper-tin alloy (CuSn), tin (Sn) plated
Maximum operating temperature	180 °C, *"IEC 60085"*, class H
Resistance to soldering heat	*"IEC 60068-2-20"*, Part 2, Test Tb, method 1B: 350 °C, 3.5 s
Solderability	*"IEC 60068-2-20"*, Part 2, Test Ta, method 1

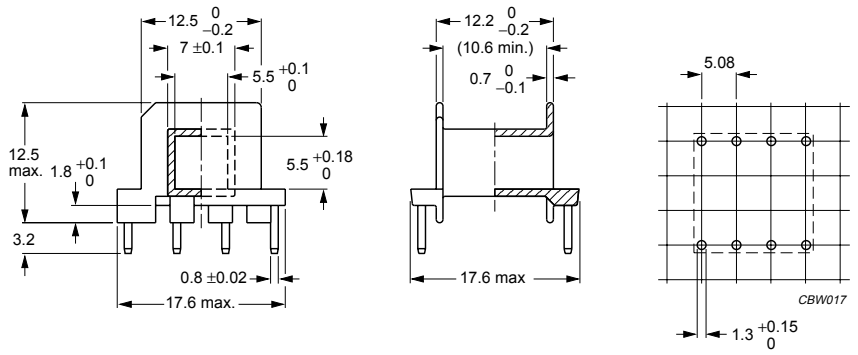

Dimensions in mm.

Fig.3 E20/10/5 coil former; 8-pins.

Winding data and area product for 8-pins E20/10/5 coil former

NUMBER OF SECTIONS	WINDING AREA (mm^2)	MINIMUM WINDING WIDTH (mm)	AVERAGE LENGTH OF TURN (mm)	AREA PRODUCT Ae x Aw (mm^4)	TYPE NUMBER
1	27	10.6	38	842	CSH-E20/10/5-1S-8P

MOUNTING PARTS

General data and ordering information

ITEM	REMARKS	FIGURE	TYPE NUMBER
Clasp	copper-zinc alloy (CuZn), nickel (Ni) plated	4	CLA-E20/10/5
Spring	copper-tin alloy (CuSn), nickel (Ni) plated	5	SPR-E20/10/5

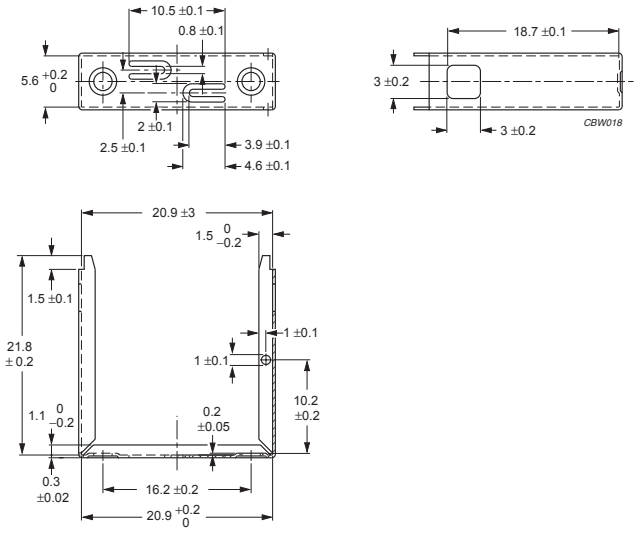

Dimensions in mm.

Fig.4 E20/10/5 clasp.

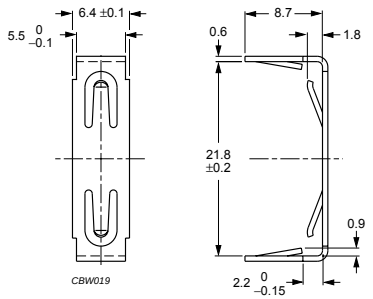

Dimensions in mm.

Fig.5 E20/10/5 spring.

CORE SETS

Effective core parameters

SYMBOL	PARAMETER	VALUE	UNIT
Σ(l/A)	core factor (C1)	1.45	mm^{-1}
V_e	effective volume	1490	mm^3
l_e	effective length	46.0	mm
A_e	effective area	32.0	mm^2
A_{min}	minimum area	32.0	mm^2
m	mass of core half	≈ 3.7	g

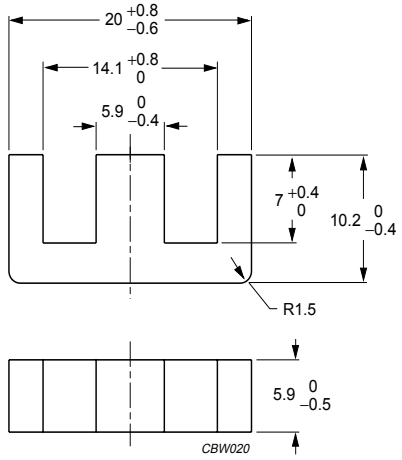

Dimensions in mm.

Fig.1 E20/10/6 core half.

Core halves

Clamping force for A_L measurements, 20 ±10 N.

GRADE	A_L (nH)	μ_e	AIR GAP (μm)	TYPE NUMBER
3C90	63 ±5%	≈ 72	≈ 980	E20/10/6-3C90-A63
	100 ±8%	≈114	≈ 520	E20/10/6-3C90-A100
	160 ±8%	≈183	≈ 280	E20/10/6-3C90-A160
	250 ±15%	≈ 286	≈160	E20/10/6-3C90-A250
	315 ±15%	≈ 360	≈120	E20/10/6-3C90-A315
	1450 ±25%	≈1660	≈ 0	E20/10/6-3C90
3C92 des	1130 ±25%	≈1300	≈ 0	E20/10/6-3C92
3C94	1450 ±25%	≈1660	≈ 0	E20/10/6-3C94
3C96 des	1350 ±25%	≈1580	≈ 0	E20/10/6-3C96
3F3	63 ±5%	≈ 72	≈ 980	E20/10/6-3F3-A63
	100 ±8%	≈114	≈ 520	E20/10/6-3F3-A100
	160 ±8%	≈183	≈ 280	E20/10/6-3F3-A160
	250 ±15%	≈ 286	≈160	E20/10/6-3F3-A250
	315 ±15%	≈ 360	≈120	E20/10/6-3F3-A315
	1350 ±25%	≈1580	≈ 0	E20/10/6-3F3
3F35 des	1000 ±25%	≈1140	≈ 0	E20/10/6-3F35

Core halves of high permeability grades

Clamping force for A_L measurements, 20 ±10 N.

GRADE	A_L (nH)	μ_e	AIR GAP (μm)	TYPE NUMBER
3C11	2600 ±25%	≈ 2970	≈ 0	E20/10/6-3C11
3E27	2700 ±25%	≈ 3090	≈ 0	E20/10/6-3E27

Properties of core sets under power conditions

GRADE	B (mT) at	CORE LOSS (W) at			
	H = 250 A/m; f = 25 kHz; T = 100 °C	f = 25 kHz; $\hat{B}$ = 200 mT; T = 100 °C	f = 100 kHz; $\hat{B}$ = 100 mT; T = 100 °C	f = 100 kHz; $\hat{B}$ = 200 mT; T = 100 °C	f = 400 kHz; $\hat{B}$ = 50 mT; T = 100 °C
3C90	≥320	≤ 0.16	≤ 0.18	–	–
3C92	≥370	–	≤ 0.14	≤ 0.75	–
3C94	≥320	–	≤ 0.14	≤ 0.75	–
3C96	≥340	–	≤ 0.11	≤ 0.6	–
3F3	≥320	–	≤ 0.2	–	≤ 0.3
3F35	≥300	–	–	–	–

Properties of core sets under power conditions (continued)

GRADE	B (mT) at	CORE LOSS (W) at			
	H = 250 A/m; f = 25 kHz; T = 100 °C	f = 500 kHz; $\hat{B}$ = 50 mT; T = 100 °C	f = 500 kHz; $\hat{B}$ = 100 mT; T = 100 °C	f = 1 MHz; $\hat{B}$ = 30 mT; T = 100 °C	f = 3 MHz; $\hat{B}$ = 10 mT; T = 100 °C
3C90	≥320	–	–	–	–
3C92	≥370	–	–	–	–
3C94	≥320	–	–	–	–
3C96	≥340	≤ 0.55	–	–	–
3F3	≥320	–	–	–	–
3F35	≥300	≤ 0.2	≤ 1.5	–	–

COIL FORMER

General data for 8-pins E20/10/6 coil former

PARAMETER	SPECIFICATION
Coil former material	polyamide (PA6.6), glass reinforced, flame retardant in accordance with *"UL 94V-0"*; UL file number E41871(M)
Pin material	copper-tin alloy (CuSn), tin (Sn) plated
Maximum operating temperature	130 °C, *"IEC 60085"*, class B
Resistance to soldering heat	*"IEC 60068-2-20"*, Part 2, Test Tb, method 1B: 350 °C, 3.5 s
Solderability	*"IEC 60068-2-20"*, Part 2, Test Ta, method 1: 235 °C, 2 s

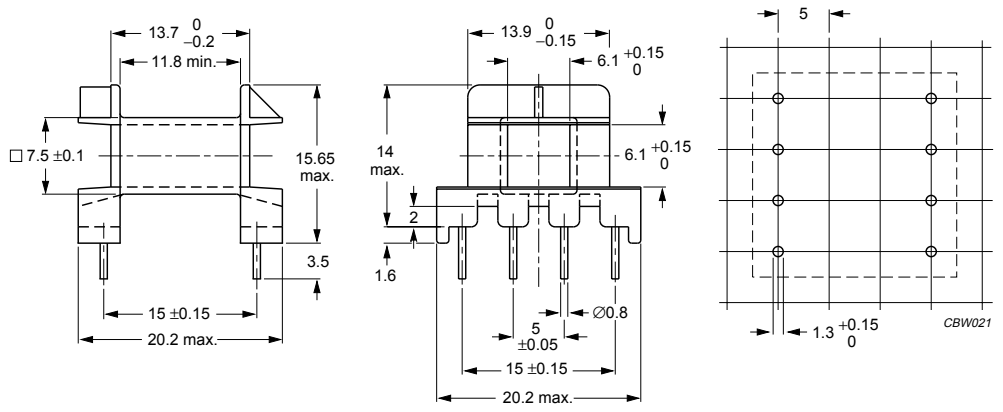

Dimensions in mm.

Fig.2 E20/10/6 coil former; 8-pins.

Winding data and area product for 8-pins E20/10/6 coil former

NUMBER OF SECTIONS	WINDING AREA (mm^2)	MINIMUM WINDING WIDTH (mm)	AVERAGE LENGTH OF TURN (mm)	AREA PRODUCT Ae x Aw (mm^4)	TYPE NUMBER
1	35	11.8	39	1120	CPH-E20/10/6-1S-8P

General data 10-pins coaxial E20/10/6 coil former

PARAMETER	SPECIFICATION
Coil former material	polyamide (PA6.6), glass-reinforced, flame retardant in accordance with *"UL 94V-0"*; UL file number E41871(M)
Pin material	copper-tin alloy (CuSn), tin (Sn) plated
Maximum operating temperature	130 °C, *"IEC 60085"*, class B
Resistance to soldering heat	*"IEC 60068-2-20"*, Part 2, Test Tb, method 1B: 350 °C, 3.5 s
Solderability	*"IEC 60068-2-20"*, Part 2, Test Ta, method 1

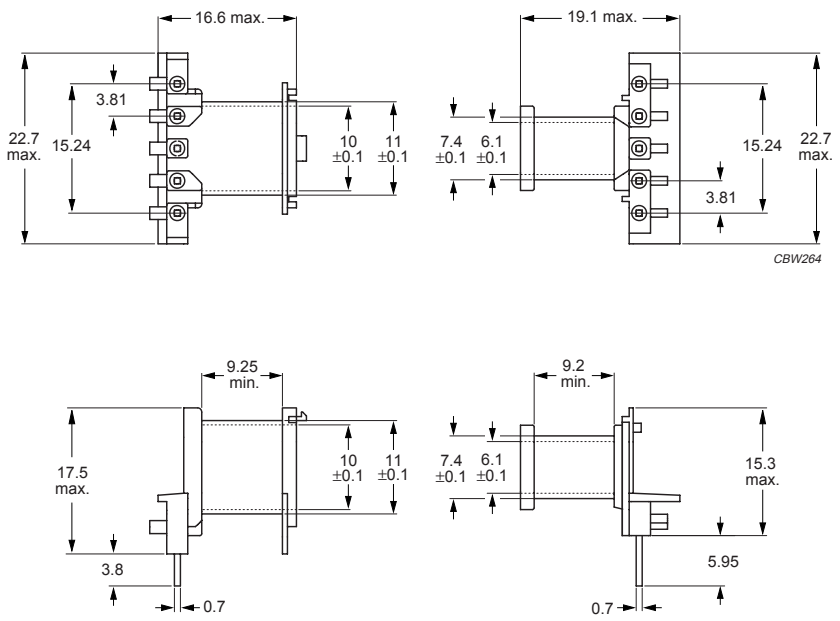

Dimensions in mm.
For mounting grid and method of fitting, see Fig.4.

Fig.3 Coaxial E20/10/6 coil former; 10-pins.

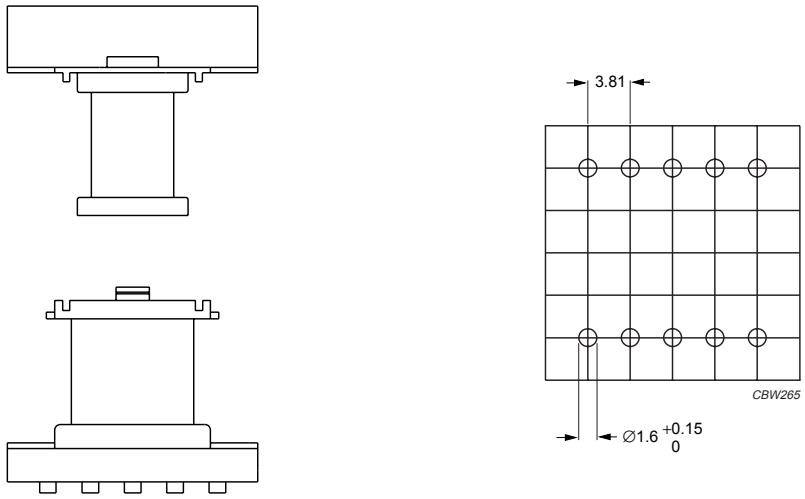

Dimensions in mm.

This coil former incorporates 6 mm creepage distance between primary and secondary windings, as well as between primary and all other conductive parts (in accordance with IEC 60380 safety regulations).

Fig.4 Mounting grid and method of fitting.

Winding data and area product for coaxial E20/10/6 coil former

NUMBER OF SECTIONS	WINDING AREA (mm^2)	MINIMUM WINDING WIDTH (mm)	AVERAGE LENGTH OF TURN (mm)	AREA PRODUCT Ae x Aw (mm^4)	TYPE NUMBER
1	11.3	9.2	34.7	362	CPCI-E20/6-1S-5P-G(1)
1	13.1	9.25	50	419	CPCO-E20/6-1S-5P-G(1)

Note

1. Also available with post-inserted pins. Different number of pins available on request for all types.

CORE SETS

Effective core parameters

SYMBOL	PARAMETER	VALUE	UNIT
$\Sigma(l/A)$	core factor (C1)	2.54	mm^{-1}
V_e	effective volume	1513	mm^3
l_e	effective length	62.0	mm
A_e	effective area	24.4	mm^2
A_{min}	minimum area	22.8	mm^2
m	mass of core half	≈ 4.3	g

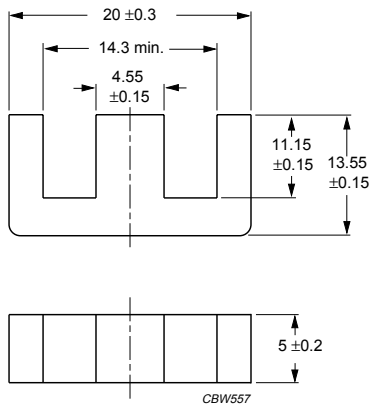

Dimensions in mm.

Fig.1 E20/14/5 core half.

Core halves

Clamping force for A_L measurements, 20 ±10 N. Gapped cores are available on request.

GRADE	A_L (nH)	μ_e	AIR GAP (μm)	TYPE NUMBER
3C90	900 ±25%	≈ 1820	≈ 0	E20/14/5-3C90
3C92 des	660 ±25%	≈ 1330	≈ 0	E20/14/5-3C92

Core halves of high permeability grades

Clamping force for A_L measurements, 20 ±10 N.

GRADE	A_L (nH)	μ_e	AIR GAP (μm)	TYPE NUMBER
3E26	2300 ±25%	≈ 4650	≈ 0	E20/14/5-3E26

Properties of core sets under power conditions

GRADE	B (mT) at	CORE LOSS (W) at		
	H = 250 A/m; f = 25 kHz; T = 100 °C	f = 25 kHz; $\hat{B}$ = 200 mT; T = 100 °C	f = 100 kHz; $\hat{B}$ = 100 mT; T = 100 °C	f = 100 kHz; $\hat{B}$ = 200 mT; T = 100 °C
3C90	≥330	≤ 0.16	≤ 0.18	–
3C92	≥370	–	≤ 0.13	≤ 0.9

CORE SETS

Effective core parameters

SYMBOL	PARAMETER	VALUE	UNIT
$\Sigma(l/A)$	core factor (C1)	1.24	mm^{-1}
V_e	effective volume	1930	mm^3
l_e	effective length	49.0	mm
A_e	effective area	39.5	mm^2
A_{min}	minimum area	37.0	mm^2
m	mass of core half	≈ 4.8	g

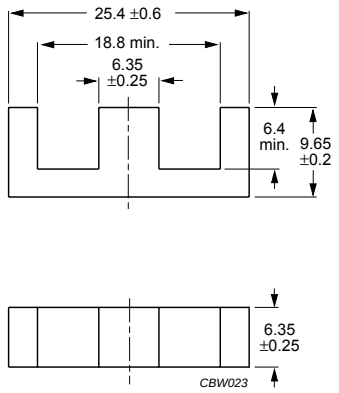

Dimensions in mm.

Fig.1 E25/10/6 core half.

Core halves

A_L measured in combination with a non-gapped core half, clamping force for A_L measurements, 20 ±10 N, unless otherwise stated.

GRADE	A_L (nH)	μ_e	TOTAL AIR GAP (μm)	TYPE NUMBER
3C81	63 ±5%(1)	≈ 62	≈ 1240	E25/10/6-3C81-E63
	100 ±8%	≈ 99	≈ 660	E25/10/6-3C81-A100
	160 ±8%	≈158	≈ 360	E25/10/6-3C81-A160
	250 ±15%	≈ 247	≈ 210	E25/10/6-3C81-A250
	315 ±15%	≈ 311	≈ 160	E25/10/6-3C81-A315
	2340 ±25%	≈ 2310	≈ 0	E25/10/6-3C81
3C90	63 ±5%(1)	≈ 62	≈ 1240	E25/10/6-3C90-E63
	100 ±8%	≈ 99	≈ 660	E25/10/6-3C90-A100
	160 ±8%	≈158	≈ 360	E25/10/6-3C90-A160
	250 ±15%	≈ 247	≈ 210	E25/10/6-3C90-A250
	315 ±15%	≈ 311	≈ 150	E25/10/6-3C90-A315
	1600 ±25%	≈ 1580	≈ 0	E25/10/6-3C90
3C91 des	2340 ±25%	≈ 2310	≈ 0	E25/10/6-3C91
3C92 des	1320 ±25%	≈ 1300	≈ 0	E25/10/6-3C92
3C94	1600 ±25%	≈ 1580	≈ 0	E25/10/6-3C94
3C96 des	1470 ±25%	≈ 1450	≈ 0	E25/10/6-3C96

GRADE	A_L (nH)	μ_e	TOTAL AIR GAP (μm)	TYPE NUMBER
3F3	63 ±5%[1]	≈ 62	≈ 1240	E25/10/6-3F3-E63
	100 ±8%	≈ 99	≈ 660	E25/10/6-3F3-A100
	160 ±8%	≈158	≈ 360	E25/10/6-3F3-A160
	250 ±15%	≈ 247	≈ 210	E25/10/6-3F3-A250
	315 ±15%	≈ 311	≈ 150	E25/10/6-3F3-A315
	1470 ±25%	≈ 1450	≈ 0	E25/10/6-3F3
3F35 des	1150 ±25%	≈ 1140	≈ 0	E25/10/6-3F35

Note

1. Measured in combination with an equal gapped core half, clamping force for A_L measurements, 20 ±10 N.

Core halves of high permeability grades

Clamping force for A_L measurements, 20 ±10 N.

GRADE	A_L (nH)	μ_e	AIR GAP (μm)	TYPE NUMBER
3E27	3200 ±25%	≈ 3160	≈ 0	E25/10/6-3E27

Properties of core sets under power conditions

GRADE	B (mT) at	CORE LOSS (W) at			
	H = 250 A/m; f = 25 kHz; T = 100 °C	f = 25 kHz; $\hat{B}$ = 200 mT; T = 100 °C	f = 100 kHz; $\hat{B}$ = 100 mT; T = 100 °C	f = 100 kHz; $\hat{B}$ = 200 mT; T = 100 °C	f = 400 kHz; $\hat{B}$ = 50 mT; T = 100 °C
3C81	≥320	≤ 0.4	–	–	–
3C90	≥330	≤ 0.2	≤ 0.22	–	–
3C91	≥320	–	≤0.13[1]	≤ 0.8[1]	–
3C92	≥370	–	≤ 0.17	≤ 1.0	–
3C94	≥330	–	≤ 0.17	≤ 1.0	–
3C96	≥340	–	≤ 0.13	≤ 0.8	–
3F3	≥320	–	≤ 0.22	–	≤ 0.38
3F35	≥300	–	–	–	–

Properties of core sets under power conditions (continued)

GRADE	B (mT) at	CORE LOSS (W) at			
	H = 250 A/m; f = 25 kHz; T = 100 °C	f = 500 kHz; $\hat{B}$ = 50 mT; T = 100 °C	f = 500 kHz; $\hat{B}$ = 100 mT; T = 100 °C	f = 1 MHz; $\hat{B}$ = 30 mT; T = 100 °C	f = 3 MHz; $\hat{B}$ = 10 mT; T = 100 °C
3C96	≥340	≤ 0.7	–	–	–
3F3	≥320	–	–	–	–
3F35	≥300	≤ 0.26	≤ 2.0	–	–

Note

1. Measured at 60 °C.

COIL FORMERS

General data for E25/10/6 coil former without pins

PARAMETER	SPECIFICATION
Coil former material	polyamide (PA6.6), glass reinforced, flame retardant in accordance with *"UL 94V-2"*
Maximum operating temperature	105 °C, *"IEC 60085"*, class A

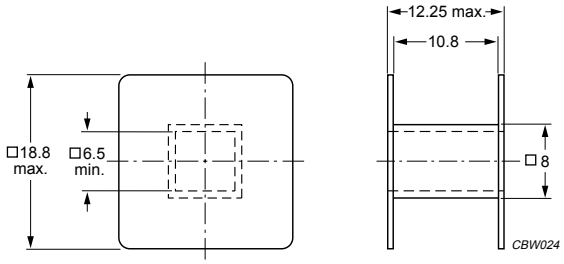

Dimensions in mm.

Fig.2 E25/10/6 coil former.

Winding data and area product for E25/10/6 coil former without pins

NUMBER OF SECTIONS	MINIMUM WINDING AREA (mm^2)	NOMINAL WINDING WIDTH (mm)	AVERAGE LENGTH OF TURN (mm)	AREA PRODUCT Ae x Aw (mm^4)	TYPE NUMBER
1	56.2	10.8	49.1	2220	CP-E25/10/6-1S

General data for 10-pins E25/10/6 coil former

PARAMETER	SPECIFICATION
Coil former material	polyamide (PA), glass reinforced, flame retardant in accordance with *"UL 94-HB"*; UL file number E41938(M)
Pin material	copper-zinc alloy (CuZn), tin (Sn) plated
Maximum operating temperature	130 °C, *"IEC 60085",* class B
Resistance to soldering heat	*"IEC 60068-2-20"*, Part 2, Test Tb, method 1B: 350 °C, 3.5 s
Solderability	*"IEC 60068-2-20"*, Part 2, Test Ta, method 1: 235 °C, 2 s

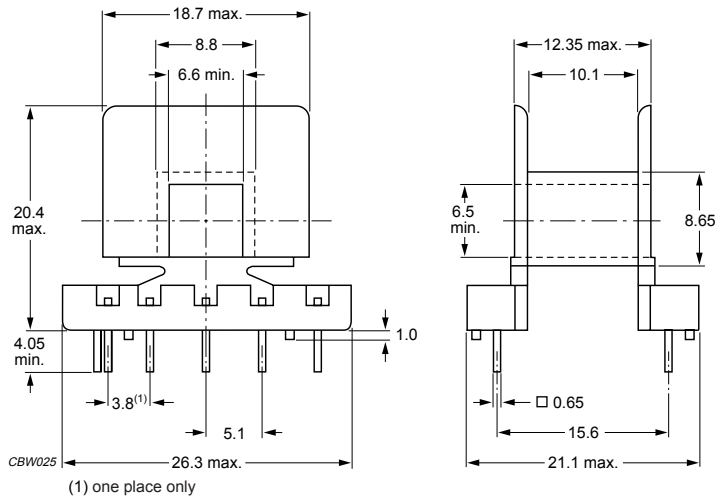

(1) one place only

Dimensions in mm.

Fig.3 E25/10/6 coil former; 10-pins.

Winding data and area product for 10-pins E25/10/6 coil former

NUMBER OF SECTIONS	MINIMUM WINDING AREA (mm^2)	NOMINAL WINDING WIDTH (mm)	AVERAGE LENGTH OF TURN (mm)	AREA PRODUCT Ae x Aw (mm^4)	TYPE NUMBER
1	47.4	10.1	53.1	1870	CPH-E25/10/6-1S-10P-Z

MOUNTING PARTS

General data for mounting parts

ITEM	REMARKS	FIGURE	TYPE NUMBER
Clamp	stainless steel (CrNi); clamping force ≈30 N	3	CLM-E25/10/6

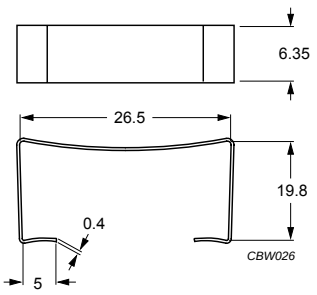

Dimensions in mm.

Fig.3 E25/10/6 clamp.

CORE SETS

Effective core parameters

SYMBOL	PARAMETER	VALUE	UNIT
$\Sigma(l/A)$	core factor (C1)	1.11	mm^{-1}
V_e	effective volume	2990	mm^3
l_e	effective length	58.0	mm
A_e	effective area	52.0	mm^2
A_{min}	minimum area	52.0	mm^2
m	mass of core half	≈ 8	g

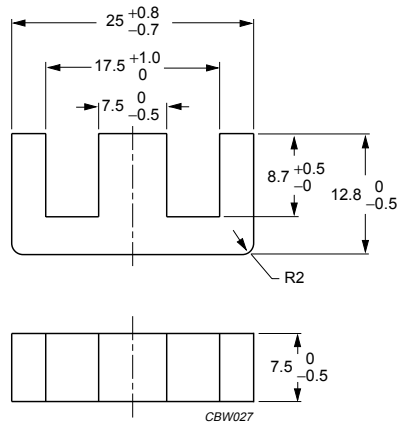

Dimensions in mm.

Fig.1 E25/13/7 core half.

Core halves

A_L measured in combination with a non-gapped core half, clamping force for A_L measurements 20 ±10 N unless otherwise stated.

GRADE	A_L (nH)	μ_e	TOTAL AIR GAP (μm)	TYPE NUMBER
3C81	63 ±5%(1)	≈ 56	≈ 1740	E25/13/7-3C81-E63
	100 ±8%	≈ 99	≈ 920	E25/13/7-3C81-A100
	160 ±8%	≈143	≈ 500	E25/13/7-3C81-A160
	250 ±15%	≈ 224	≈ 280	E25/13/7-3C81-A250
	315 ±15%	≈ 282	≈ 210	E25/13/7-3C81-A315
	2460 ±25%	≈ 2200	≈ 0	E25/13/7-3C81
3C90	63 ±5%(1)	≈ 56	≈ 1740	E25/13/7-3C90-E63
	100 ±8%	≈ 99	≈ 920	E25/13/7-3C90-A100
	160 ±8%	≈143	≈ 500	E25/13/7-3C90-A160
	250 ±15%	≈ 224	≈ 280	E25/13/7-3C90-A250
	315 ±15%	≈ 282	≈ 210	E25/13/7-3C90-A315
	1900 ±25%	≈ 1700	≈ 0	E25/13/7-3C90
3C91 des	2460 ±25%	≈ 2200	≈ 0	E25/13/7-3C91
3C92 des	1450 ±25%	≈ 1280	≈ 0	E25/13/7-3C92
3C94	1900 ±25%	≈ 1700	≈ 0	E25/13/7-3C94
3C96 des	1650 ±25%	≈ 1480	≈ 0	E25/13/7-3C96

GRADE	A_L (nH)	μ_e	TOTAL AIR GAP (μm)	TYPE NUMBER
3F3	63 ±5%[1]	≈ 56	≈ 1740	E25/13/7-3F3-E63
	100 ±8%	≈ 99	≈ 920	E25/13/7-3F3-A100
	160 ±8%	≈143	≈ 500	E25/13/7-3F3-A160
	250 ±15%	≈ 224	≈ 280	E25/13/7-3F3-A250
	315 ±15%	≈ 282	≈ 210	E25/13/7-3F3-A315
	1650 ±25%	≈ 1480	≈ 0	E25/13/7-3F3
3F35 des	1250 ±25%	≈ 1120	≈ 0	E25/13/7-3F3

Note

1. Measured in combination with an equal gapped core half, clamping force for A_L measurements, 20 ±10 N.

Core halves of high permeability grades

Clamping force for A_L measurements 20 ±10 N.

GRADE	A_L (nH)	μ_e	AIR GAP (μm)	TYPE NUMBER
3E27	4000 ±25%	≈ 3580	≈ 0	E25/13/7-3E27

Properties of core sets under power conditions

GRADE	B (mT) at	CORE LOSS (W) at			
	H = 250 A/m; f = 25 kHz; T = 100 °C	f = 25 kHz; $\hat{B}$ = 200 mT; T = 100 °C	f = 100 kHz; $\hat{B}$ = 100 mT; T = 100 °C	f = 100 kHz; $\hat{B}$ = 200 mT; T = 100 °C	f = 400 kHz; $\hat{B}$ = 50 mT; T = 100 °C
3C81	≥320	≤ 0.61	–	–	–
3C90	≥330	≤ 0.35	≤ 0.38	–	–
3C91	≥320	–	≤ 0.22[1]	≤ 1.2[1]	–
3C92	≥370	–	≤ 0.3	≤ 1.5	–
3C94	≥330	–	≤ 0.3	≤ 1.5	–
3C96	≥340	–	≤ 0.22	≤ 1.2	–
3F3	≥320	–	≤ 0.38	–	≤ 0.65
3F35	≥300	–	–	–	–

Properties of core sets under power conditions (continued)

GRADE	B (mT) at	CORE LOSS (W) at			
	H = 250 A/m; f = 25 kHz; T = 100 °C	f = 500 kHz; $\hat{B}$ = 50 mT; T = 100 °C	f = 500 kHz; $\hat{B}$ = 100 mT; T = 100 °C	f = 1 MHz; $\hat{B}$ = 30 mT; T = 100 °C	f = 3 MHz; $\hat{B}$ = 10 mT; T = 100 °C
3C96	≥340	≤ 1.1	–	–	–
3F3	≥320	–	–	–	–
3F35	≥300	≤ 0.4	≤ 3.1	–	–

Note

1. Measured at 60 °C.

COIL FORMERS

General data for 6-pins E25/13/7 coil former

PARAMETER	SPECIFICATION
Coil former material	phenolformaldehyde (PF), glass reinforced, flame retardant in accordance with *"UL 94V-0"*; UL file number E59481(M)
Pin material	copper-tin alloy (CuSn), tin (Sn) plated
Maximum operating temperature	180 °C, *"IEC 60085"*, class H
Resistance to soldering heat	*"IEC 60068-2-20"*, Part 2, Test Tb, method 1B, 350 °C, 3.5 s
Solderability	*"IEC 60068-2-20"*, Part 2, Test Ta, method 1, 235 °C, 2 s

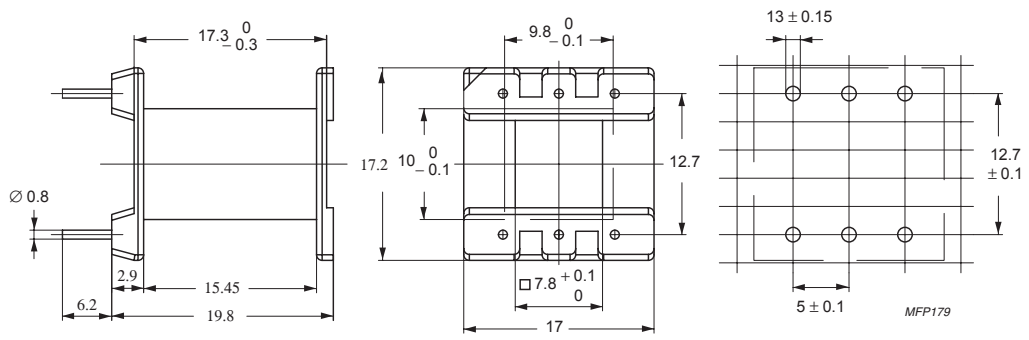

Dimensions in mm.

Fig.2 E25/13/7 coil former; 6-pins.

Winding data and area product for 6-pins E25/13/7 coil former

NUMBER OF SECTIONS	WINDING AREA (mm^2)	MINIMUM WINDING WIDTH (mm)	AVERAGE LENGTH OF TURN (mm)	AREA PRODUCT Ae x Aw (mm^4)	TYPE NUMBER
1	56	15.45	49	2910	CSV-E25/13/7-1S-6P-C

General data for 10-pins E25/13/7 coil former

PARAMETER	SPECIFICATION
Coil former material	polybutyleneterephtalate (PBT), glass reinforced, flame retardant in accordance with *"UL 94V-0"*; UL file number E41871(M)
Pin material	copper-tin alloy (CuSn), tin (Sn) plated
Maximum operating temperature	155 °C, *"IEC 60085"*, class F
Resistance to soldering heat	*"IEC 60068-2-20"*, Part 2, Test Tb, method 1B, 350 °C, 3.5 s
Solderability	*"IEC 60068-2-20"*, Part 2, Test Ta, method 1, 235 °C, 2 s

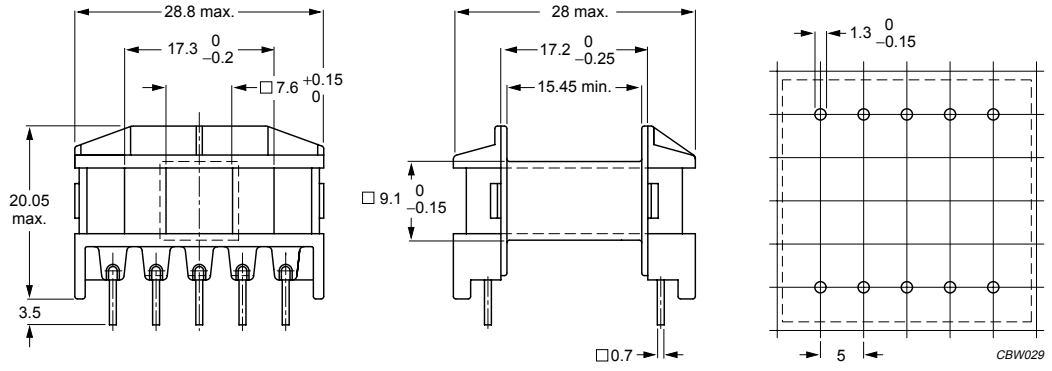

Dimensions in mm.

Fig.3 E25/13/7 coil former; 10-pins.

Winding data and area product for 10-pins E25/13/7 coil former

NUMBER OF SECTIONS	WINDING AREA (mm^2)	MINIMUM WINDING WIDTH (mm)	AVERAGE LENGTH OF TURN (mm)	AREA PRODUCT Ae x Aw (mm^4)	TYPE NUMBER
1	63.3	15.45	52.8	3290	CPH-E25/13/7-1S-10P

MOUNTING PARTS

General data for mounting parts

ITEM	REMARKS	FIGURE	TYPE NUMBER
Clip	stainless steel (CrNi)	4	CLI-E25/13/7

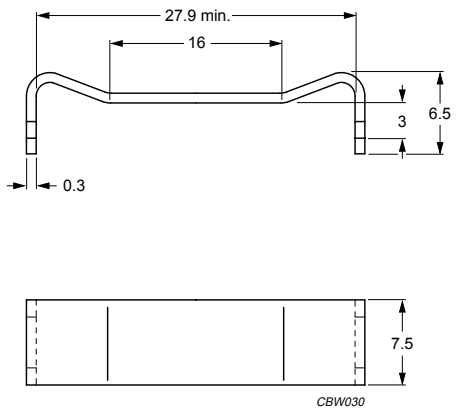

Dimensions in mm.

Fig.4 E25/13/7 clip.

CORE SETS

Effective core parameters

SYMBOL	PARAMETER	VALUE	UNIT
Σ(l/A)	core factor (C1)	0.733	mm^{-1}
V_e	effective volume	4500	mm^3
l_e	effective length	57.5	mm
A_e	effective area	78.4	mm^2
A_{min}	minimum area	78.4	mm^2
m	mass of core half	≈ 11	g

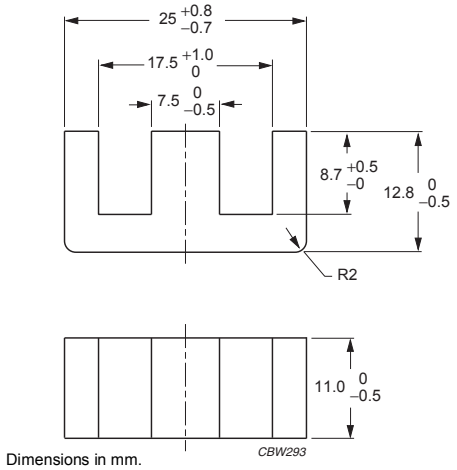

Fig.1 E25/13/11 core half.

Core halves

Clamping force for A_L measurements 20 ±10 N.

GRADE	A_L (nH)	μ_e	TOTAL AIR GAP (μm)	TYPE NUMBER
3C90	63 ±5%(1)	≈ 37	≈ 2800	E25/13/11-3C90-E63
	100 ±8%(1)	≈ 58	≈ 1480	E25/13/11-3C90-E100
	160 ±8%	≈ 93	≈ 790	E25/13/11-3C90-A160
	250 ±15%	≈ 146	≈ 450	E25/13/11-3C90-A250
	315 ±15%	≈ 184	≈ 340	E25/13/11-3C90-A315
	2800 ±25%	≈ 1630	≈ 0	E25/13/11-3C90
3C92 des	2200 ±25%	≈ 1280	≈ 0	E25/13/11-3C92
3C94	2800 ±25%	≈ 1630	≈ 0	E25/13/11-3C94
3C96 des	2700 ±25%	≈ 1580	≈ 0	E25/13/11-3C96
3F3	63 ±5%(1)	≈ 37	≈ 2800	E25/13/11-3F3-E63
	100 ±8%(1)	≈ 58	≈ 1480	E25/13/11-3F3-E100
	160 ±8%	≈ 93	≈ 790	E25/13/11-3F3-A160
	250 ±15%	≈ 146	≈ 450	E25/13/11-3F3-A250
	315 ±15%	≈ 184	≈ 340	E25/13/11-3F3-A315
	2700 ±25%	≈ 1580	≈ 0	E25/13/11-3F3
3F35 des	2000 ±25%	≈ 1170	≈ 0	E25/13/11-3F35

Note

1. Measured in combination with an equal gapped core half, clamping force for A_L measurements, 20 ±10 N.

Properties of core sets under power conditions

GRADE	B (mT) at	CORE LOSS (W) at			
	H = 250 A/m; f = 25 kHz; T = 100 °C	f = 25 kHz; $\hat{B}$ = 200 mT; T = 100 °C	f = 100 kHz; $\hat{B}$ = 100 mT; T = 100 °C	f = 100 kHz; $\hat{B}$ = 200 mT; T = 100 °C	f = 400 kHz; $\hat{B}$ = 50 mT; T = 100 °C
3C90	≥330	≤ 0.55	≤ 0.55	–	–
3C92	≥370	–	≤ 0.42	≤ 2.4	–
3C94	≥330	–	≤ 0.42	≤ 2.4	–
3C96	≥340	–	≤ 0.33	≤ 1.9	–
3F3	≥320	–	≤ 0.55	–	≤ 0.95
3F35	≥300	–	–	–	–

Properties of core sets under power conditions (continued)

GRADE	B (mT) at	CORE LOSS (W) at			
	H = 250 A/m; f = 25 kHz; T = 100 °C	f = 500 kHz; $\hat{B}$ = 50 mT; T = 100 °C	f = 500 kHz; $\hat{B}$ = 100 mT; T = 100 °C	f = 1 MHz; $\hat{B}$ = 30 mT; T = 100 °C	f = 3 MHz; $\hat{B}$ = 10 mT; T = 100 °C
3C90	≥330	–	–	–	–
3C92	≥370	–	–	–	–
3C94	≥330	–	–	–	–
3C96	≥340	≤ 1.7	–	–	–
3F3	≥320	–	–	–	–
3F35	≥300	≤ 0.6	≤ 4.7	–	–

CORE SETS

Effective core parameters

SYMBOL	PARAMETER	VALUE	UNIT
$\Sigma(l/A)$	core factor (C1)	1.12	mm^{-1}
V_e	effective volume	4000	mm^3
l_e	effective length	67.0	mm
A_e	effective area	60.0	mm^2
A_{min}	minimum area	49.0	mm^2
m	mass of core half	≈ 11	g

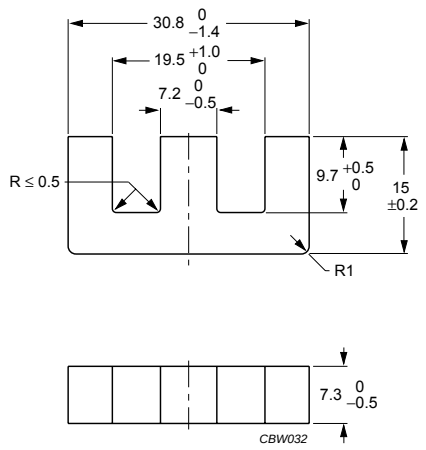

Dimensions in mm.

Fig.1 E30/15/7 core half.

Core halves

A_L measured in combination with a non-gapped core half, clamping force for A_L measurements 20 ±10 N, unless stated otherwise.

GRADE	A_L (nH)	μ_e	TOTAL AIR GAP (μm)	TYPE NUMBER
3C81	100 ±5%(1)	≈ 89	≈ 1100	E30/15/7-3C81-E100
	160 ±5%	≈142	≈ 580	E30/15/7-3C81-A160
	250 ±5%	≈ 222	≈ 330	E30/15/7-3C81-A250
	315 ±5%	≈ 280	≈ 240	E30/15/7-3C81-A315
	400 ±8%	≈ 355	≈ 180	E30/15/7-3C81-A400
	630 ±15%	≈ 560	≈ 100	E30/15/7-3C81-A630
	2500 ±25%	≈ 2220	≈ 0	E30/15/7-3C81
3C90	100 ±5%(1)	≈ 89	≈ 1100	E30/15/7-3C90-E100
	160 ±5%	≈142	≈ 580	E30/15/7-3C90-A160
	250 ±5%	≈ 222	≈ 330	E30/15/7-3C90-A250
	315 ±5%	≈ 280	≈ 240	E30/15/7-3C90-A315
	400 ±8%	≈ 355	≈ 180	E30/15/7-3C90-A400
	630 ±15%	≈ 560	≈ 100	E30/15/7-3C90-A630
	1900 ±25%	≈ 1690	≈ 0	E30/15/7-3C90
3C91 des	2500 ±25%	≈ 2220	≈ 0	E30/15/7-3C91
3C92 des	1400 ±25%	≈ 1250	≈ 0	E30/15/7-3C92
3C94	1900 ±25%	≈ 1690	≈ 0	E30/15/7-3C94
3C96 des	1600 ±25%	≈ 1420	≈ 0	E30/15/7-3C96

GRADE	A_L (nH)	μ_e	TOTAL AIR GAP (μm)	TYPE NUMBER
3F3	100 ±5%[1]	≈ 89	≈ 1100	E30/15/7-3F3-E100
	160 ±5%	≈142	≈ 580	E30/15/7-3F3-A160
	250 ±5%	≈ 222	≈ 330	E30/15/7-3F3-A250
	315 ±5%	≈ 280	≈ 240	E30/15/7-3F3-A315
	400 ±8%	≈ 355	≈ 180	E30/15/7-3F3-A400
	630 ±15%	≈ 560	≈ 100	E30/15/7-3F3-A630
	1600 ±25%	≈1420	≈ 0	E30/15/7-3F3
3F35 des	1250 ±25%	≈1110	≈ 0	E30/15/7-3F35

Note

1. Measured in combination with an equal gapped core half, clamping force for A_L measurements, 20 ±10 N.

Core halves of high permeability grades

Clamping force for A_L measurements 20 ±10 N.

GRADE	A_L (nH)	μ_e	AIR GAP (μm)	TYPE NUMBER
3C11	3300 ±25%	≈ 2930	≈ 0	E30/15/7-3C11
3E27	4100 ±25%	≈ 3640	≈ 0	E30/15/7-3E27

Properties of core sets under power conditions

GRADE	B (mT) at	CORE LOSS (W) at			
	H = 250 A/m; f = 25 kHz; T = 100 °C	f = 25 kHz; $\hat{B}$ = 200 mT; T = 100 °C	f = 100 kHz; $\hat{B}$ = 100 mT; T = 100 °C	f = 100 kHz; $\hat{B}$ = 200 mT; T = 100 °C	f = 400 kHz; $\hat{B}$ = 50 mT; T = 100 °C
3C81	≥320	≤ 0.82	–	–	–
3C90	≥330	≤ 0.45	≤ 0.48	–	–
3C91	≥320	–	≤ 0.27[1]	≤ 1.6[1]	–
3C92	≥370	–	≤ 0.36	≤ 2.0	–
3C94	≥330	–	≤ 0.36	≤ 2.0	–
3C96	≥340	–	≤ 0.27	≤ 1.6	–
3F3	≥320	–	≤ 0.47	–	≤ 0.80
3F35	≥300	–	–	–	–

Properties of core sets under power conditions (continued)

GRADE	B (mT) at	CORE LOSS (W) at			
	H = 250 A/m; f = 25 kHz; T = 100 °C	f = 500 kHz; $\hat{B}$ = 50 mT; T = 100 °C	f = 500 kHz; $\hat{B}$ = 100 mT; T = 100 °C	f = 1 MHz; $\hat{B}$ = 30 mT; T = 100 °C	f = 3 MHz; $\hat{B}$ = 10 mT; T = 100 °C
3C96	≥340	≤ 1.5	–	–	–
3F3	≥320	–	–	–	–
3F35	≥300	≤ 0.54	≤ 4.2	–	–

Note

1. Measured at 60 °C.

COIL FORMERS

GENERAL DATA FOR E30/15/7 COIL FORMER WITHOUT PINS

PARAMETER	SPECIFICATION
Coil former material	polyamide (PA6.6), glass reinforced, flame retardant in accordance with *"UL 94-HB"*; UL file number E41613(M)
Maximum operating temperature	120 °C

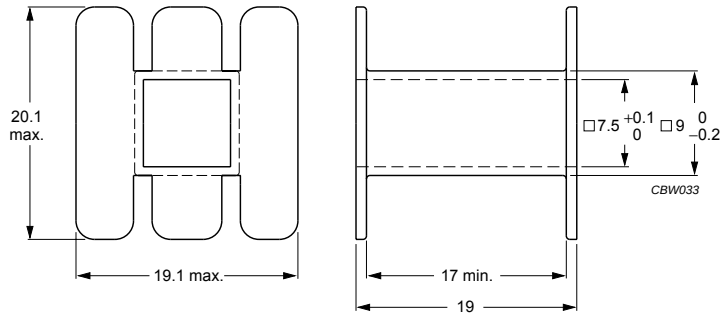

Dimensions in mm.

Fig.2 E30/15/7 coil former.

WINDING DATA AND AREA PRODUCT FOR E30/15/7 COIL FORMER WITHOUT PINS (E)

NUMBER OF SECTIONS	WINDING AREA (mm^2)	MINIMUM WINDING WIDTH (mm)	AVERAGE LENGTH OF TURN (mm)	AREA PRODUCT Ae x Aw (mm^4)	TYPE NUMBER
1	80	17.0	56	4800	CP-E30/15/7-1S

GENERAL DATA FOR 10-PINS E30/15/7 COIL FORMER

PARAMETER	SPECIFICATION
Coil former material	phenolformaldehyde (PF), glass reinforced, flame retardant in accordance with *"UL 94V-0"*; UL file number E167521(M)
Pin material	copper-tin alloy (CuSn), tin (Sn) plated
Maximum operating temperature	180 °C, *"IEC 60085"*, class H
Resistance to soldering heat	*"IEC 60068-2-20"*, Part 2, Test Tb, method 1B: 350 °C, 3.5 s
Solderability	*"IEC 60068-2-20"*, Part 2, Test Ta, method 1: 235 °C, 2 s

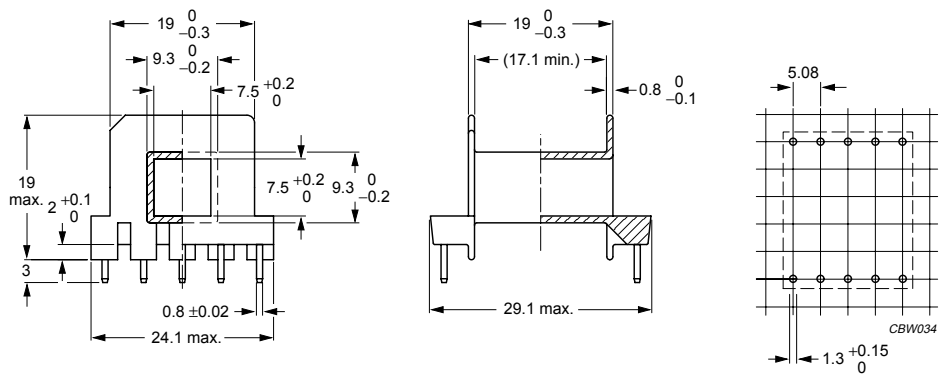

Dimensions in mm.

Fig.3 E30/15/7 coil former; 10-pins.

WINDING DATA AND AREA PRODUCT FOR 10-PINS E30/15/7 COIL FORMER (E)

NUMBER OF NECTIONS	WINDING AREA (mm^2)	MINIMUM WINDING WIDTH (mm)	AVERAGE LENGTH OF TURN (mm)	AREA PRODUCT Ae x Aw (mm^4)	TYPE NUMBER
1	80	17.1	56	4800	CSH-E30/15/7-1S-10P

MOUNTING PARTS

General data and ordering information

ITEM	REMARKS	FIGURE	TYPE NUMBER
Clasp	CuZn alloy, Ni plated	4	CLA-E30/15/7
Spring	stainless steel (CrNi)	5	SPR-E30/15/7

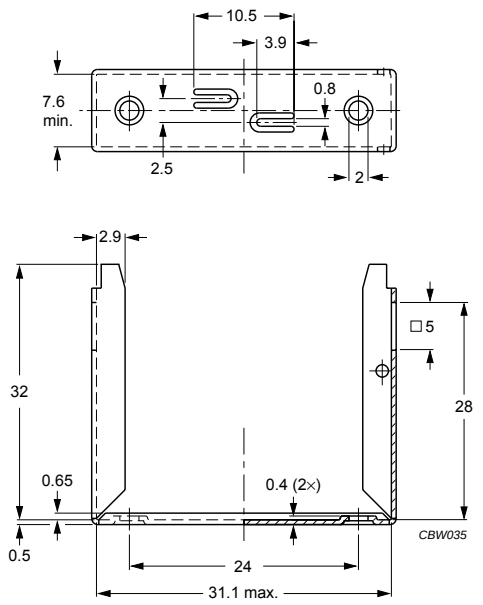

Dimensions in mm.

Fig.4 E30/15/7 clasp.

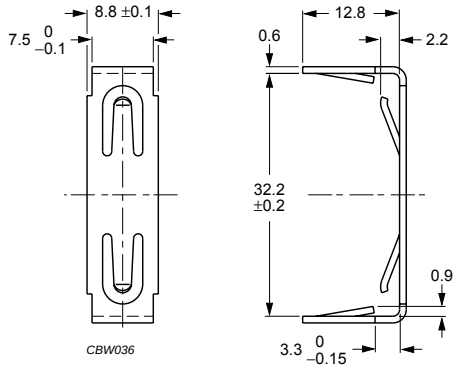

Dimensions in mm.

Fig.5 E30/15/7 spring.

CORE SETS

Effective core parameters

SYMBOL	PARAMETER	VALUE	UNIT
$\Sigma(l/A)$	core factor (C1)	0.740	mm^{-1}
V_e	effective volume	5150	mm^3
l_e	effective length	61.9	mm
A_e	effective area	83.2	mm^2
A_{min}	minimum area	83.2	mm^2
m	mass of core half	≈ 13	g

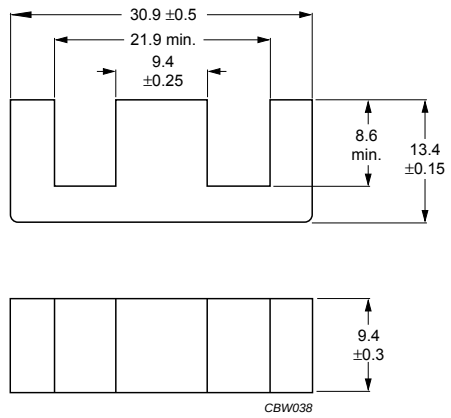

Dimensions in mm.

Fig.1 E31/13/9 core half.

Core halves

A_L measured in combination with a non-gapped core half, clamping force for A_L measurements 40 ±20 N, unless stated otherwise.

GRADE	A_L (nH)	μ_e	TOTAL AIR GAP (μm)	TYPE NUMBER
3C90	100 ±5%[1]	≈ 59	≈ 1560	E31/13/9-3C90-E100
	160 ±5%[1]	≈ 95	≈ 840	E31/13/9-3C90-E160
	250 ±5%	≈ 148	≈ 480	E31/13/9-3C90-A250
	315 ±5%	≈ 186	≈ 360	E31/13/9-3C90-A315
	400 ±8%	≈ 237	≈ 270	E31/13/9-3C90-A400
	630 ±15%	≈ 373	≈ 150	E31/13/9-3C90-A630
	2970 ±25%	≈1760	≈ 0	E31/13/9-3C90

Note

1. Measured in combination with an equal gapped core half, clamping force for A_L measurements, 40 ±20 N.

Properties of core sets under power conditions

GRADE	B (mT) at	CORE LOSS (W) at	
	H = 250 A/m; f = 25 kHz; T = 100 °C	f = 25 kHz; $\hat{B}$ = 200 mT; T = 100 °C	f = 100 kHz; $\hat{B}$ = 100 mT; T = 100 °C
3C90	≥320	≤ 0.52	≤ 0.58

CORE SETS

Effective core parameters

SYMBOL	PARAMETER	VALUE	UNIT
Σ(l/A)	core factor (C1)	0.894	mm^{-1}
V_e	effective volume	6180	mm^3
l_e	effective length	74	mm
A_e	effective area	83	mm^2
A_{min}	minimum area	83	mm^2
m	mass of core half	≈ 16	g

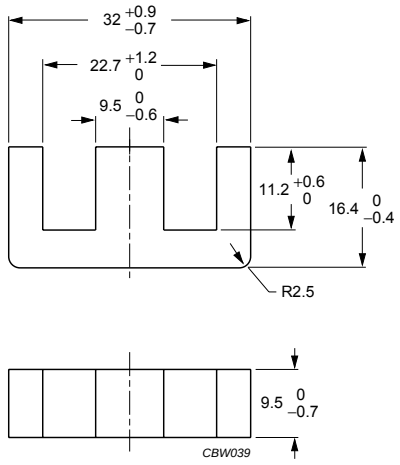

Dimensions in mm.

Fig.1 E32/16/9 core half.

Core halves

A_L measured in combination with a non-gapped core half, clamping force for A_L measurements 40 ±20 N, unless stated otherwise.

GRADE	A_L (nH)	μ_e	TOTAL AIR GAP (μm)	TYPE NUMBER
3C90	100 ±5%(1)	≈ 71	≈ 1600	E32/16/9-3C90-E100
	160 ±5%(1)	≈ 114	≈ 860	E32/16/9-3C90-E160
	250 ±5%	≈ 177	≈ 480	E32/16/9-3C90-A250
	315 ±5%	≈ 223	≈ 360	E32/16/9-3C90-A315
	400 ±8%	≈ 284	≈ 260	E32/16/9-3C90-A400
	630 ±15%	≈ 447	≈ 150	E32/16/9-3C90-A630
	2500 ±25%	≈ 1770	≈ 0	E32/16/9-3C90
3C92 des	1850 ±25%	≈ 1320	≈ 0	E32/16/9-3C92
3C94	2500 ±25%	≈ 1770	≈ 0	E32/16/9-3C94
3C96 des	2300 ±25%	≈ 1630	≈ 0	E32/16/9-3C96

GRADE	A_L (nH)	μ_e	TOTAL AIR GAP (μm)	TYPE NUMBER
3F3	100 ±5%[1]	≈ 71	≈ 1600	E32/16/9-3F3-E100
	160 ±5%[1]	≈ 114	≈ 860	E32/16/9-3F3-E160
	250 ±5%	≈ 177	≈ 480	E32/16/9-3F3-A250
	315 ±5%	≈ 223	≈ 360	E32/16/9-3F3-A315
	400 ±8%	≈ 284	≈ 260	E32/16/9-3F3-A400
	630 ±15%	≈ 447	≈ 150	E32/16/9-3F3-A630
	2300 ±25%	≈ 1630	≈ 0	E32/16/9-3F3
3F35 des	1700 ±25%	≈ 1210	≈ 0	E32/16/9-3F35

1. A_L measured in combination with a equal gapped core half.

Properties of core sets under power conditions

GRADE	B (mT) at	CORE LOSS (W) at			
	H = 250 A/m; f = 25 kHz; T = 100 °C	f = 25 kHz; $\hat{B}$ = 200 mT; T = 100 °C	f = 100 kHz; $\hat{B}$ = 100 mT; T = 100 °C	f = 100 kHz; $\hat{B}$ = 200 mT; T = 100 °C	f = 400 kHz; $\hat{B}$ = 50 mT; T = 100 °C
3C90	≥330	≤ 0.65	≤ 0.7	–	–
3C92	≥370	–	≤ 0.55	≤ 3.2	–
3C94	≥330	–	≤ 0.55	≤ 3.2	–
3C96	≥340	–	≤ 0.43	≤ 2.5	–
3F3	≥320	–	≤ 0.75	–	≤ 1.3
3F35	≥300	–	–	–	–

Properties of core sets under power conditions (continued)

GRADE	B (mT) at	CORE LOSS (W) at			
	H = 250 A/m; f = 25 kHz; T = 100 °C	f = 500 kHz; $\hat{B}$ = 50 mT; T = 100 °C	f = 500 kHz; $\hat{B}$ = 100 mT; T = 100 °C	f = 1 MHz; $\hat{B}$ = 30 mT; T = 100 °C	f = 3 MHz; $\hat{B}$ = 10 mT; T = 100 °C
3C90	≥330	–	–	–	–
3C92	≥370	–	–	–	–
3C94	≥330	–	–	–	–
3C96	≥340	≤ 2.3	–	–	–
3F3	≥320	–	–	–	–
3F35	≥300	≤ 0.83	≤ 6.5	–	–

COIL FORMER

General data for 12-pins E32/16/9 coil former

PARAMETER	SPECIFICATION
Coil former material	polyamide (PA6.6), glass reinforced, flame retardant in accordance with *"UL 94V-0"*; UL file number E41871(M)
Pin material	copper-tin alloy (CuSn), tin (Sn) plated
Maximum operating temperature	130 °C, *"IEC 60085",* class B
Resistance to soldering heat	*"IEC 60068-2-20"*, Part 2, Test Tb, method 1B: 350 °C, 3.5 s
Solderability	*"IEC 60068-2-20"*, Part 2, Test Ta, method 1: 235 °C, 2 s

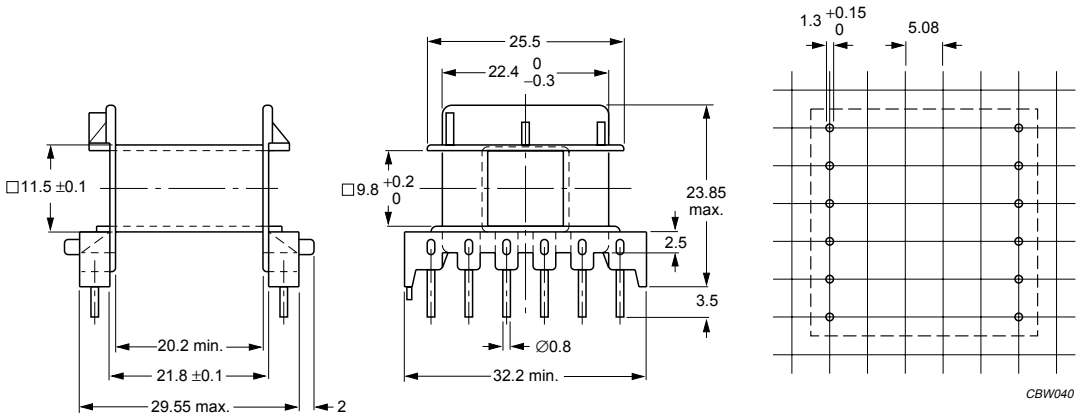

Dimensions in mm.

Fig.2 E32/16/9 coil former; 12-pins.

Winding data and area product for 12-pins E32/16/9 coil former

NUMBER OF SECTIONS	WINDING AREA (mm^2)	MINIMUM WINDING WIDTH (mm)	AVERAGE LENGTH OF TURN (mm)	AREA PRODUCT Ae x Aw (mm^4)	TYPE NUMBER
1	97	20.2	60	8050	CPH-E32/16/9-1S-12P

CORE SETS

Effective core parameters

SYMBOL	PARAMETER	VALUE	UNIT
$\Sigma(l/A)$	core factor (C1)	0.850	mm^{-1}
V_e	effective volume	5590	mm^3
l_e	effective length	69.3	mm
A_e	effective area	80.7	mm^2
A_{min}	minimum area	80.7	mm^2
m	mass of core half	≈ 14	g

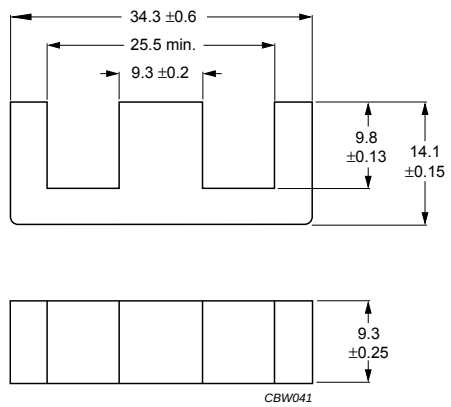

Dimensions in mm.

Fig.1 E34/14/9 core half.

Core halves

A_L measured in combination with a non-gapped core half, clamping force for A_L measurements 40 ±20 N, unless stated otherwise.

GRADE	A_L (nH)	μ_e	TOTAL AIR GAP (μm)	TYPE NUMBER
3C81	100 ±5%(1)	≈ 68	≈ 1520	E34/14/9-3C81-E100
	160 ±5%(1)	≈ 109	≈ 820	E34/14/9-3C81-E160
	250 ±5%	≈ 171	≈ 460	E34/14/9-3C81-A250
	315 ±5%	≈ 215	≈ 350	E34/14/9-3C81-A315
	400 ±8%	≈ 273	≈ 260	E34/14/9-3C81-A400
	630 ±15%	≈ 431	≈ 140	E34/14/9-3C81-A630
	3200 ±25%	≈ 2190	≈ 0	E34/14/9-3C81
3C90	100 ±5%(1)	≈ 68	≈ 1520	E34/14/9-3C90-E100
	160 ±5%(1)	≈ 109	≈ 820	E34/14/9-3C90-E160
	250 ±5%	≈ 171	≈ 460	E34/14/9-3C90-A250
	315 ±5%	≈ 215	≈ 350	E34/14/9-3C90-A315
	400 ±8%	≈ 273	≈ 260	E34/14/9-3C90-A400
	630 ±15%	≈ 431	≈ 140	E34/14/9-3C90-A630
	2440 ±25%	≈ 1670	≈ 0	E34/14/9-3C90
3C91 des	3200 ±25%	≈ 2190	≈ 0	E34/14/9-3C91
3C92 des	1850 ±25%	≈ 1250	≈ 0	E34/14/9-3C92
3C94	2440 ±25%	≈ 1760	≈ 0	E34/14/9-3C94
3C96 des	2125 ±25%	≈ 1450	≈ 0	E34/14/9-3C96

GRADE	A_L (nH)	μ_e	TOTAL AIR GAP (μm)	TYPE NUMBER
3F3	100 ±5%[1]	≈ 68	≈ 1520	E34/14/9-3F3-E100
	160 ±5%[1]	≈ 109	≈ 820	E34/14/9-3F3-E160
	250 ±5%	≈ 171	≈ 460	E34/14/9-3F3-A250
	315 ±5%	≈ 215	≈ 350	E34/14/9-3F3-A315
	400 ±8%	≈ 273	≈ 260	E34/14/9-3F3-A400
	630 ±15%	≈ 431	≈ 140	E34/14/9-3F3-A630
	2125 ±25%	≈ 1450	≈ 0	E34/14/9-3F3
3F35 des	1680 ±25%	≈ 1150	≈ 0	E34/14/9-3F35

Note

1. Measured in combination with an equal gapped core half, clamping force for A_L measurements, 40 ±20 N.

Properties of core sets under power conditions

GRADE	B (mT) at	CORE LOSS (W) at			
	H = 250 A/m; f = 25 kHz; T = 100 °C	f = 25 kHz; $\hat{B}$ = 200 mT; T = 100 °C	f = 100 kHz; $\hat{B}$ = 100 mT; T = 100 °C	f = 100 kHz; $\hat{B}$ = 200 mT; T = 100 °C	f = 400 kHz; $\hat{B}$ = 50 mT; T = 100 °C
3C81	≥320	≤ 1.2	–	–	–
3C90	≥320	≤ 0.56	≤ 0.63	–	–
3C91	≥320	–	≤ 0.38[1]	≤ 2.3[1]	–
3C92	≥370	–	≤ 0.5	≤ 2.9	–
3C94	≥320	–	≤ 0.5	≤ 2.9	–
3C96	≥340	–	≤ 0.38	≤ 2.3	–
3F3	≥320	–	≤ 0.62	–	≤ 1.1
3F35	≥300	–	–	–	–

Properties of core sets under power conditions (continued)

GRADE	B (mT) at	CORE LOSS (W) at			
	H = 250 A/m; f = 25 kHz; T = 100 °C	f = 500 kHz; $\hat{B}$ = 50 mT; T = 100 °C	f = 500 kHz; $\hat{B}$ = 100 mT; T = 100 °C	f = 1 MHz; $\hat{B}$ = 30 mT; T = 100 °C	f = 3 MHz; $\hat{B}$ = 10 mT; T = 100 °C
3C96	≥340	≤ 2.1	–	–	–
3F3	≥320	–	–	–	–
3F35	≥300	≤ 0.75	≤ 5.9	–	–

Note

1. Measured at 60 °C.

COIL FORMERS

General data for E34/14/9 coil former

PARAMETER	SPECIFICATION
Coil former material	polyamide (PA6.6), glass reinforced, flame retardant in accordance with *"UL 94-HB"*; UL file number E41938(M)
Maximum operating temperature	130 °C, *"IEC 60085"*, class B

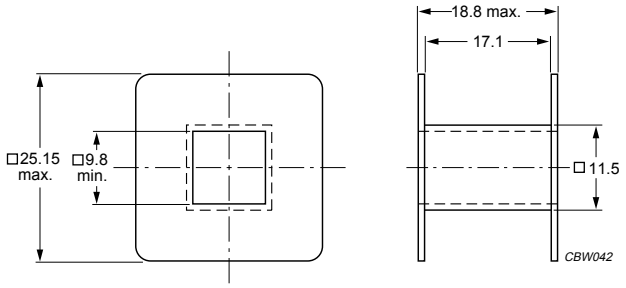

Dimensions in mm.

Fig.2 E34/14/9 coil former.

Winding data and area product for E34/14/9 coil former without pins

NUMBER OF SECTIONS	MINIMUM WINDING AREA (mm^2)	NOMINAL WINDING WIDTH (mm)	AVERAGE LENGTH OF TURN (mm)	AREA PRODUCT Ae x Aw (mm^4)	TYPE NUMBER
1	111	17.1	67.0	8960	CP-E34/14/9-1S

General data for 12-pins E34/14/9 coil former

PARAMETER	SPECIFICATION
Coil former material	polyamide (PA6.6), glass reinforced, flame retardant in accordance with *"UL 94-HB"*; UL file number E41938(M)
Maximum operating temperature	130 °C, *"IEC 60085"*, class B
Pin material	copper-zinc alloy (CuZnP), tin (Sn) plated
Resistance to soldering heat	*"IEC 60068-2-20"*, Part 2, Test Tb, method 1B: 350 °C, 3.5 s
Solderability	*"IEC 60068-2-20"*, Part 2, Test Ta, method 1: 235 °C, 2 s

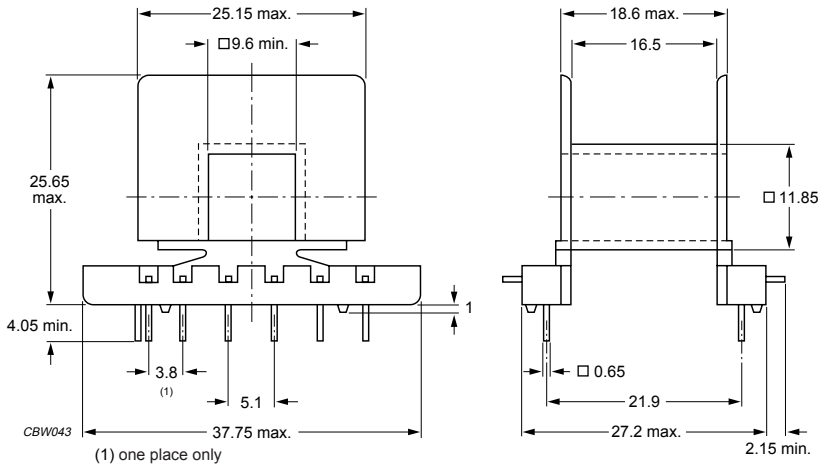

Dimensions in mm.

Fig.3 E34/14/9 coil former: 12-pins.

Winding data and area product for 12-pins E34/14/9 coil former

NUMBER OF SECTIONS	MINIMUM WINDING AREA (mm^2)	NOMINAL WINDING WIDTH (mm)	AVERAGE LENGTH OF TURN (mm)	AREA PRODUCT Ae x Aw (mm^4)	TYPE NUMBER
1	102	16.5	69.0	8230	CPH-E34/14/9-1S-12PD-Z

CORE SETS

Effective core parameters

SYMBOL	PARAMETER	VALUE	UNIT
Σ(l/A)	core factor (C1)	0.807	mm^{-1}
V_e	effective volume	8070	mm^3
l_e	effective length	80.7	mm
A_e	effective area	100	mm^2
A_{min}	minimum area	100	mm^2
m	mass of core half	≈ 20	g

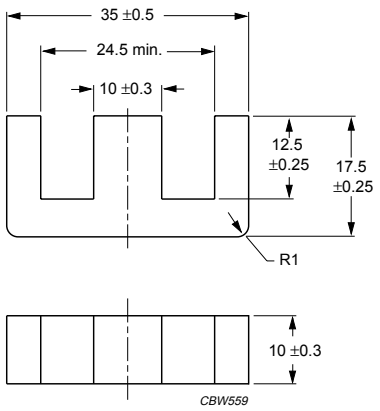

Dimensions in mm.

Fig.1 E35/18/10 core half.

Core halves

A_L measured in combination with a non-gapped core half, clamping force for A_L measurements, 30 ±15 N, unless stated otherwise.

GRADE	A_L (nH)	μ_e	TOTAL AIR GAP (μm)	TYPE NUMBER
3C90	100 ±5%(1)	≈ 64	≈ 2000	E35/18/10-3C90-E100
	160 ±5%(1)	≈ 103	≈ 1060	E35/18/10-3C90-E160
	250 ±5%	≈ 161	≈ 590	E35/18/10-3C90-A250
	315 ±5%	≈ 202	≈ 440	E35/18/10-3C90-A315
	400 ±8%	≈ 257	≈ 330	E35/18/10-3C90-A400
	630 ±15%	≈ 405	≈ 180	E35/18/10-3C90-A630
	2500 ±25%	≈ 1610	≈ 0	E35/18/10-3C90
3C95 des	2980 ±25%	≈ 1915	≈ 0	E35/18/10-3C95

Note

1. Measured in combination with an equal gapped core half, clamping force for A_L measurements, 30 ±15 N.

Properties of core sets under power conditions

GRADE	B (mT) at	CORE LOSS (W) at			
	H = 250 A/m; f = 25 kHz; T = 100 °C	f = 25 kHz; $\hat{B}$ = 200 mT; T = 100 °C	f = 100 kHz; $\hat{B}$ = 100 mT; T = 100 °C	f = 100 kHz; $\hat{B}$ = 200 mT; T = 25 °C	f = 100 kHz; $\hat{B}$ = 200 mT; T = 100 °C
3C90	≥330	≤ 0.95	≤ 1.1	–	–
3C95	≥330	–	–	≤ 4.76	≤ 4.52

CORE SETS

Effective core parameters

SYMBOL	PARAMETER	VALUE	UNIT
Σ(l/A)	core factor (C1)	0.762	mm^{-1}
V_e	effective volume	12160	mm^3
l_e	effective length	96	mm
A_e	effective area	126	mm^2
A_{min}	minimum area	121	mm^2
m	mass of core half	≈ 31	g

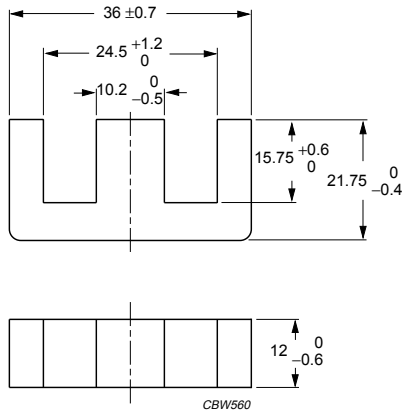

Dimensions in mm.

Fig.1 E36/21/12 core half.

Core halves

A_L measured in combination with a non-gapped core half, clamping force for A_L measurements, 40 ±20 N, unless stated otherwise.

GRADE	A_L (nH)	μ_e	TOTAL AIR GAP (μm)	TYPE NUMBER
3C90	100 ±5%(1)	≈ 61	≈ 2720	E36/21/12-3C90-E100
	160 ±5%(1)	≈ 97	≈ 1400	E36/21/12-3C90-E160
	250 ±5%	≈ 152	≈ 770	E36/21/12-3C90-A250
	315 ±5%	≈ 191	≈ 570	E36/21/12-3C90-A315
	400 ±8%	≈ 243	≈ 420	E36/21/12-3C90-A400
	630 ±15%	≈ 382	≈ 230	E36/21/12-3C90-A630
	2650 ±25%	≈ 1610	≈ 0	E36/21/12-3C90

Note

1. Measured in combination with an equal gapped core half, clamping force for A_L measurements, 40 ±20 N.

Properties of core sets under power conditions

GRADE	B (mT) at	CORE LOSS (W) at			
	H = 250 A/m; f = 25 kHz; T = 100 °C	f = 25 kHz; $\hat{B}$ = 200 mT; T = 100 °C	f = 100 kHz; $\hat{B}$ = 100 mT; T = 100 °C	f = 100 kHz; $\hat{B}$ = 200 mT; T = 25 °C	f = 100 kHz; $\hat{B}$ = 200 mT; T = 100 °C
3C90	≥330	≤ 1.4	≤ 1.5	–	–

CORE SETS

Effective core parameters

SYMBOL	PARAMETER	VALUE	UNIT
Σ(l/A)	core factor (C1)	0.517	mm^{-1}
V_e	effective volume	11500	mm^3
l_e	effective length	77.0	mm
A_e	effective area	149	mm^2
A_{min}	minimum area	142	mm^2
m	mass of core half	≈ 30	g

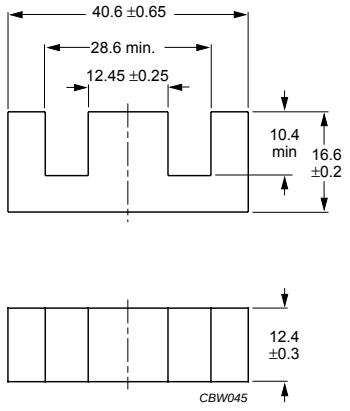

Dimensions in mm.

Fig.1 E41/17/12 core half.

Core halves

A_L measured in combination with a non-gapped core half, clamping force for A_L measurements 40 ±20 N, unless stated otherwise.

GRADE	A_L (nH)	μ_e	TOTAL AIR GAP (μm)	TYPE NUMBER
3C81	100 ±5%(1)	≈ 41	≈ 3000	E41/17/12-3C81-E100
	160 ±5%(1)	≈ 66	≈ 1620	E41/17/12-3C81-E160
	250 ±5%(1)	≈ 103	≈ 920	E41/17/12-3C81-E250
	315 ±5%	≈ 130	≈ 690	E41/17/12-3C81-A315
	400 ±8%	≈ 164	≈ 520	E41/17/12-3C81-A400
	630 ±15%	≈ 259	≈ 300	E41/17/12-3C81-A630
	5370 ±25%	≈ 2210	≈ 0	E41/17/12-3C81
3C90	100 ±5%(1)	≈ 41	≈ 3000	E41/17/12-3C90-E100
	160 ±5%(1)	≈ 66	≈ 1620	E41/17/12-3C90-E160
	250 ±5%(1)	≈ 103	≈ 920	E41/17/12-3C90-E250
	315 ±5%	≈ 130	≈ 690	E41/17/12-3C90-A315
	400 ±8%	≈ 164	≈ 520	E41/17/12-3C90-A400
	630 ±15%	≈ 259	≈ 300	E41/17/12-3C90-A630
	4100 ±25%	≈ 1670	≈ 0	E41/17/12-3C90
3C91 des	5370 ±25%	≈ 2210	≈ 0	E41/17/12-3C91
3C92 des	3300 ±25%	≈ 1360	≈ 0	E41/17/12-3C92
3C94	4100 ±25%	≈ 1670	≈ 0	E41/17/12-3C94
3C95 des	5370 ±25%	≈ 2210	≈ 0	E41/17/12-3C95

GRADE	A_L (nH)	μ_e	TOTAL AIR GAP (μm)	TYPE NUMBER
3F3	100 ±5%[1]	≈ 41	≈ 3000	E41/17/12-3F3-E100
	160 ±5%[1]	≈ 66	≈ 1620	E41/17/12-3F3-E160
	250 ±5%[1]	≈ 103	≈ 920	E41/17/12-3F3-E250
	315 ±5%	≈ 130	≈ 690	E41/17/12-3F3-A315
	400 ±8%	≈ 164	≈ 520	E41/17/12-3F3-A400
	630 ±15%	≈ 259	≈ 300	E41/17/12-3F3-A630
	3575 ±25%	≈ 1470	≈ 0	E41/17/12-3F3

Note

1. Measured in combination with an equal gapped core half, clamping force for A_L measurements, 40 ±20 N.

Properties of core sets under power conditions

GRADE	B (mT) at	CORE LOSS (W) at				
	H = 250 A/m; f = 25 kHz; T = 100 °C	f = 25 kHz; $\hat{B}$ = 200 mT; T = 100 °C	f = 100 kHz; $\hat{B}$ = 100 mT; T = 100 °C	f = 100 kHz; $\hat{B}$ = 200 mT; T = 25 °C	f = 100 kHz; $\hat{B}$ = 200 mT; T = 100 °C	f = 400 kHz; $\hat{B}$ = 50 mT; T = 100 °C
3C81	≥320	≤ 2.4	–	–	–	–
3C90	≥320	≤ 1.3	≤ 1.45	–	–	–
3C91	≥320	–	≤ 0.85[1]	–	≤ 5.1[1]	–
3C92	≥370	–	≤ 1.1	–	≤ 6.4	–
3C94	≥320	–	≤ 1.1	–	≤ 6.4	–
3C95	≥320	–	–	≤ 7.25	≤ 6.9	–
3F3	≥320	–	≤ 1.4	–	–	≤ 2.2

Note

1. Measured at 60 °C.

COIL FORMERS

General data for E41/17/12 coil former without pins

PARAMETER	SPECIFICATION
Coil former material	polyamide (PA6.6), glass reinforced, flame retardant in accordance with *"UL 94V-2"*; UL file number E41938(M)
Maximum operating temperature	130 °C, *"IEC 60085"*, class B

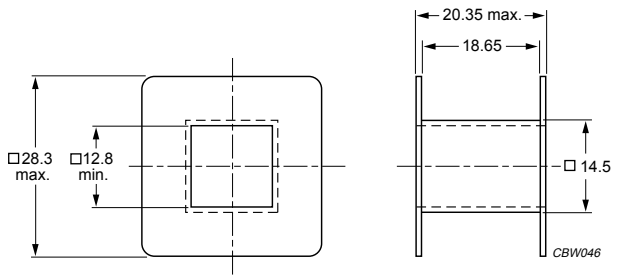

Dimensions in mm.

Fig.2 E41/17/12 coil former.

Winding data and area product for E41/17/12 coil former without pins

NUMBER OF SECTIONS	MINIMUM WINDING AREA (mm^2)	NOMINAL WINDING WIDTH (mm)	AVERAGE LENGTH OF TURN (mm)	AREA PRODUCT Ae x Aw (mm^4)	TYPE NUMBER
1	120	18.6	79.6	17900	CP-E41/17/12-1S

General data for 12-pins E41/17/12 coil former

PARAMETER	SPECIFICATION
Coil former material	polyamid (PA66), glass reinforced, flame retardant in accordance with *"UL 94HB"*; UL file number E41938
Pin material	copper-tin alloy (CuSn), tin (Sn) plated
Maximum operating temperature	130 °C, *"IEC 60085"*, class B
Resistance to soldering heat	*"IEC 60068-2-20"*, Part 2, Test Tb, method 1B: 350 °C, 3.5 s
Solderability	*"IEC 60068-2-20"*, Part 2, Test Ta, method 1: 235 °C, 2 s

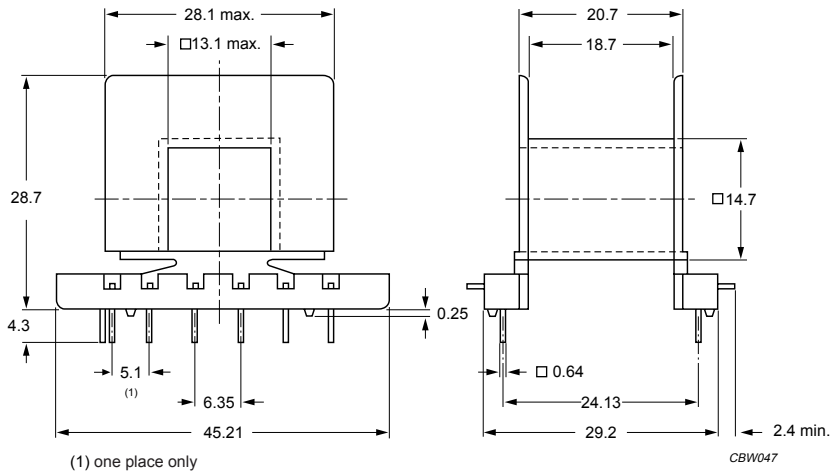

(1) one place only

Dimensions in mm.

Fig.3 E41/17/12 coil former; 12-pins.

Winding data and area product for 12-pins E41/17/12 coil former

NUMBER OF SECTIONS	MINIMUM WINDING AREA (mm^2)	NOMINAL WINDING WIDTH (mm)	AVERAGE LENGTH OF TURN (mm)	AREA PRODUCT Ae x Aw (mm^4)	TYPE NUMBER
1	114	18	81.2	17000	CPH-E41/12-1S-12PD-Z

CORE SETS

Effective core parameters

SYMBOL	PARAMETER	VALUE	UNIT
Σ(l/A)	core factor (C1)	0.548	mm^{-1}
V_e	effective volume	17300	mm^3
l_e	effective length	97.0	mm
A_e	effective area	178	mm^2
A_{min}	minimum area	175	mm^2
m	mass of core half	≈ 44	g

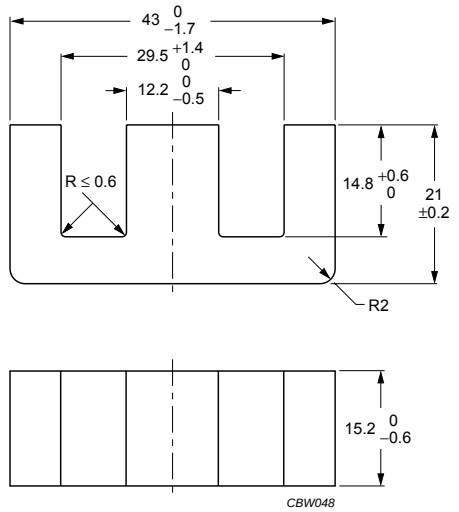

Dimensions in mm.

Fig.1 E42/21/15 core half.

Core halves

A_L measured in combination with a non-gapped core half, clamping force for A_L measurements 40 ±20 N, unless stated otherwise.

GRADE	A_L (nH)	μ_e	TOTAL AIR GAP (μm)	TYPE NUMBER
3C81	100 ±5%(1)	≈ 43	≈ 3960	E42/21/15-3C81-E100
	160 ±5%(1)	≈ 69	≈ 2060	E42/21/15-3C81-E160
	250 ±5%(1)	≈ 108	≈ 1140	E42/21/15-3C81-E250
	315 ±5%	≈ 137	≈ 850	E42/21/15-3C81-A315
	400 ±8%	≈ 173	≈ 630	E42/21/15-3C81-A400
	630 ±15%	≈ 273	≈ 360	E42/21/15-3C81-A630
	5300 ±25%	≈ 2300	≈ 0	E42/21/15-3C81
3C90	100 ±5%(1)	≈ 43	≈ 3960	E42/21/15-3C90-E100
	160 ±5%(1)	≈ 69	≈ 2060	E42/21/15-3C90-E160
	250 ±5%(1)	≈ 108	≈ 1140	E42/21/15-3C90-E250
	315 ±5%	≈ 137	≈ 850	E42/21/15-3C90-A315
	400 ±8%	≈ 173	≈ 630	E42/21/15-3C90-A400
	630 ±15%	≈ 273	≈ 360	E42/21/15-3C90-A630
	3950 ±25%	≈ 1710	≈ 0	E42/21/15-3C90
3C91 des	5300 ±25%	≈ 2300	≈ 0	E42/21/15-3C91
3C92 des	3100 ±25%	≈ 1350	≈ 0	E42/21/15-3C92
3C94	4100 ±25%	≈ 1780	≈ 0	E42/21/15-3C94

GRADE	A_L (nH)	μ_e	TOTAL AIR GAP (μm)	TYPE NUMBER
3C95 des	5300 ±25%	≈ 2300	≈ 0	E42/21/15-3C95
3F3	100 ±5%(1)	≈ 43	≈ 3960	E42/21/15-3F3-E100
	160 ±5%(1)	≈ 69	≈ 2060	E42/21/15-3F3-E160
	250 ±5%(1)	≈ 108	≈ 1140	E42/21/15-3F3-E250
	315 ±5%	≈ 137	≈ 850	E42/21/15-3F3-A315
	400 ±8%	≈ 173	≈ 630	E42/21/15-3F3-A400
	630 ±15%	≈ 273	≈ 360	E42/21/15-3F3-A630
	3600 ±25%	≈ 1560	≈ 0	E42/21/15-3F3

Note

1. Measured in combination with an equal gapped core half, clamping force for A_L measurements, 40 ±20 N.

Properties of core sets under power conditions

GRADE	B (mT) at	CORE LOSS (W) at				
	H = 250 A/m; f = 25 kHz; T = 100 °C	f = 25 kHz; $\hat{B}$ = 200 mT; T = 100 °C	f = 100 kHz; $\hat{B}$ = 100 mT; T = 100 °C	f = 100 kHz; $\hat{B}$ = 200 mT; T = 25 °C	f = 100 kHz; $\hat{B}$ = 200 mT; T = 100 °C	f = 400 kHz; $\hat{B}$ = 50 mT; T = 100 °C
3C81	≥320	≤ 3.6	–	–	–	–
3C90	≥320	≤ 1.9	≤ 2.2	–	–	–
3C91	≥320	–	≤ 1.3(1)	–	≤ 7.0(1)	–
3C92	≥370	–	≤ 1.7	–	≤ 8.8	–
3C94	≥320	–	≤ 1.7	–	≤ 8.8	–
3C95	≥320	–	–	≤ 10.9	≤ 10.4	–
3F3	≥320	–	≤ 2.2	–	–	≤ 3.8

Note

1. Measured at 60 °C.

COIL FORMERS

General data for E42/21/15 coil former without pins

PARAMETER	SPECIFICATION
Coil former material	polybutyleneterephtalate (PBT), glass reinforced, flame retardant in accordance with *"UL 94V-0"*; UL file number E45329(R)
Maximum operating temperature	155 °C, *"IEC 60085"*, class F

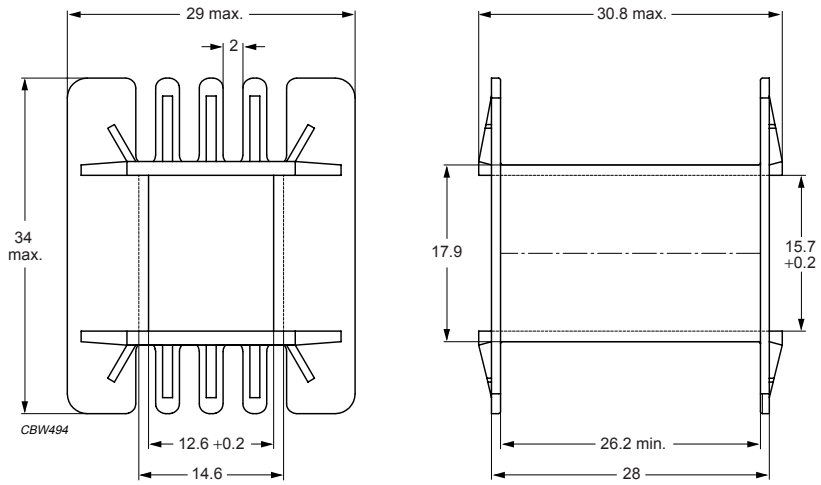

Dimensions in mm.

Fig.2 E42/21/15 coil former.

Winding data and area product for E42/21/15 coil former without pins

NUMBER OF SECTIONS	WINDING AREA (mm^2)	MINIMUM WINDING WIDTH (mm)	AVERAGE LENGTH OF TURN (mm)	AREA PRODUCT Ae x Aw (mm^4)	TYPE NUMBER
1	178	26.2	93	31700	CP-E42/21/15-1S

General data for 10-pins E42/21/15 coil former

PARAMETER	SPECIFICATION
Coil former material	polyamide (PA6.6), glass reinforced, flame retardant in accordance with *"UL 94-HB"*; UL file number E41613(M)
Pin material	copper-tin alloy (CuSn), tin (Sn) plated
Maximum operating temperature	130 °C, *"IEC 60085"*, class E
Resistance to soldering heat	*"IEC 60068-2-20"*, Part 2, Test Tb, method 1B: 350 °C, 3.5 s
Solderability	*"IEC 60068-2-20"*, Part 2, Test Ta, method 1: 235 °C, 2 s

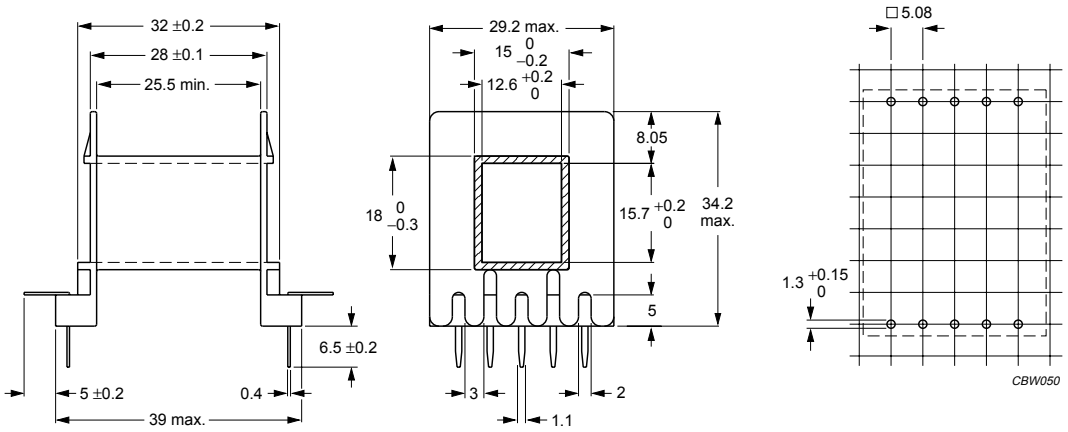

Dimensions in mm.

Fig.3 E42/21/15 coil former; 10-pins.

Winding data and area product for 10-pins E42/21/15 coil former

NUMBER OF SECTIONS	WINDING AREA (mm^2)	MINIMUM WINDING WIDTH (mm)	AVERAGE LENGTH OF TURN (mm)	AREA PRODUCT Ae x Aw (mm^4)	TYPE NUMBER
1	178	25.5	93	31700	CPH-E42/21/15-1S-10P

General data for 10-pins E42/21/15 coil former (A)

PARAMETER	SPECIFICATION
Coil former material	polyamide (PA6.6), glass reinforced, flame retardant in accordance with *"UL 94-HB"*; UL file number E41938(M)
Pin material	copper-tin alloy (CuSn), tin (Sn) plated
Maximum operating temperature	130 °C, *"IEC 60085"*, class A
Resistance to soldering heat	*"IEC 60068-2-20"*, Part 2, Test Tb, method 1B: 350 °C, 3.5 s
Solderability	*"IEC 60068-2-20"*, Part 2, Test Ta, method 1: 235 °C, 2 s

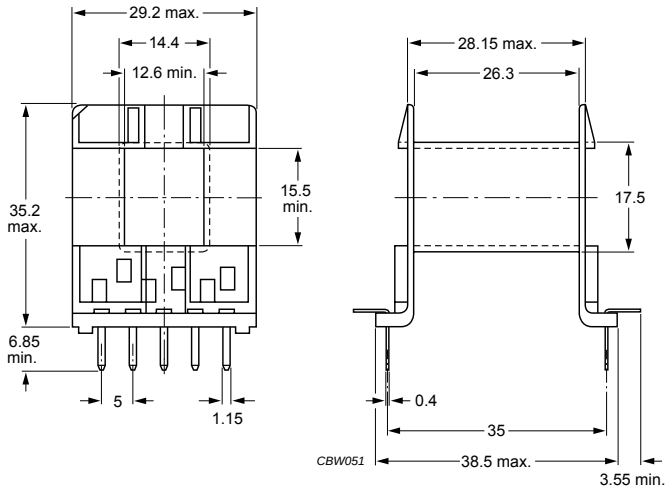

Dimensions in mm.

Fig.4 E42/21/15 coil former; 10-pins (A).

Winding data and area product for 10-pins E42/21/15 coil former

NUMBER OF SECTIONS	MINIMUM WINDING AREA (mm^2)	NOMINAL WINDING WIDTH (mm)	AVERAGE LENGTH OF TURN (mm)	AREA PRODUCT Ae x Aw (mm^4)	TYPE NUMBER
1	180	26.3	87	32000	CPH-E42/15-1S-10PD-A-Z

MOUNTING PARTS

General data for mounting parts

ITEM	REMARKS	FIGURE	TYPE NUMBER
Clasp	steel, zinc (Zn) plated	5	CLA-E42/21/15
Spring	steel, zinc (Zn) plated	6	SPR-E42/21/15

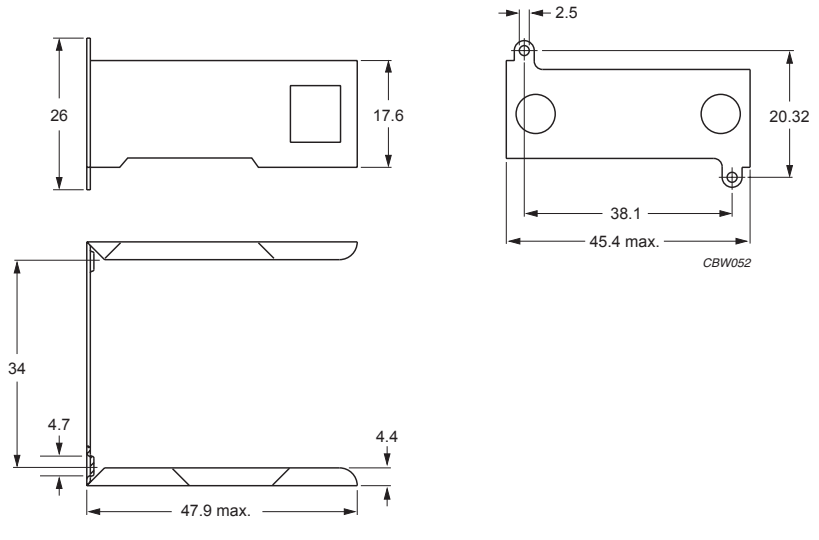

Dimensions in mm.

Fig.5 E42/21/15 clasp.

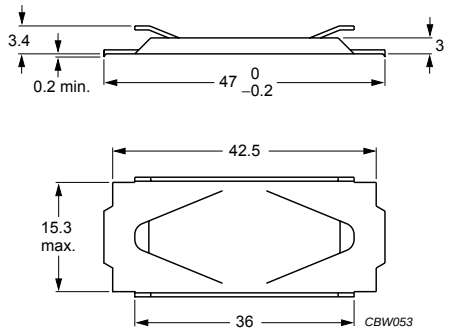

Dimensions in mm.

Fig.6 E42/21/15 spring.

CORE SETS

Effective core parameters

SYMBOL	PARAMETER	VALUE	UNIT
Σ(l/A)	core factor (C1)	0.417	mm^{-1}
V_e	effective volume	22700	mm^3
l_e	effective length	97.0	mm
A_e	effective area	233	mm^2
A_{min}	minimum area	233	mm^2
m	mass of core half	≈ 56	g

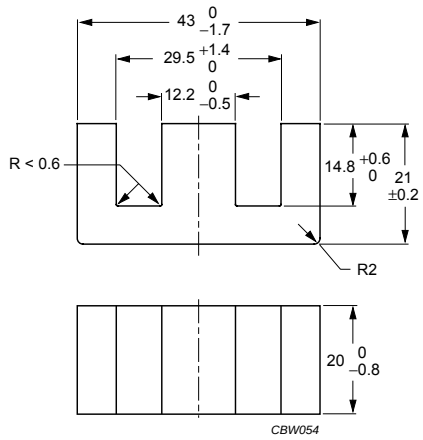

Dimensions in mm.

Fig.1 E42/21/20 core half.

Core halves

A_L measured in combination with a non-gapped core half, clamping force for A_L measurements 40 ±20 N, unless stated otherwise.

GRADE	A_L (nH)	μ_e	TOTAL AIR GAP (μm)	TYPE NUMBER
3C81	100 ±5%(1)	≈ 33	≈ 5320	E42/21/20-3C81-E100
	160 ±5%(1)	≈ 53	≈ 2800	E42/21/20-3C81-E160
	250 ±5%(1)	≈ 83	≈ 1540	E42/21/20-3C81-E250
	315 ±5%(1)	≈ 104	≈ 1160	E42/21/20-3C81-E315
	400 ±8%	≈ 133	≈ 850	E42/21/20-3C81-A400
	630 ±15%	≈ 209	≈ 490	E42/21/20-3C81-A630
	6950 ±25%	≈ 2300	≈ 0	E42/21/20-3C81
3C90	100 ±5%(1)	≈ 33	≈ 5320	E42/21/20-3C90-E100
	160 ±5%(1)	≈ 53	≈ 2800	E42/21/20-3C90-E160
	250 ±5%(1)	≈ 83	≈ 1540	E42/21/20-3C90-E250
	315 ±5%(1)	≈ 104	≈ 1160	E42/21/20-3C90-E315
	400 ±8%	≈ 133	≈ 850	E42/21/20-3C90-A400
	630 ±15%	≈ 209	≈ 490	E42/21/20-3C90-A630
	5000 ±25%	≈ 1660	≈ 0	E42/21/20-3C90
3C91 des	6950 ±25%	≈ 2300	≈ 0	E42/21/20-3C91
3C92 des	4100 ±25%	≈ 1360	≈ 0	E42/21/20-3C92
3C94	5200 ±25%	≈ 1720	≈ 0	E42/21/20-3C94

GRADE	A_L (nH)	μ_e	TOTAL AIR GAP (μm)	TYPE NUMBER
3C95 des	6950 ±25%	≈ 2300	≈ 0	E42/21/20-3C95
3F3	100 ±5%(1)	≈ 33	≈ 5320	E42/21/20-3F3-E100
	160 ±5%(1)	≈ 53	≈ 2800	E42/21/20-3F3-E160
	250 ±5%(1)	≈ 83	≈ 1540	E42/21/20-3F3-E250
	315 ±5%(1)	≈ 104	≈ 1160	E42/21/20-3F3-E315
	400 ±8%	≈ 133	≈ 850	E42/21/20-3F3-A400
	630 ±15%	≈ 209	≈ 490	E42/21/20-3F3-A630
	4600 ±25%	≈1520	≈ 0	E42/21/20-3F3

Note

1. Measured in combination with an equal gapped core half.

Properties of core sets under power conditions

GRADE	B (mT) at	CORE LOSS (W) at				
	H = 250 A/m; f = 25 kHz; T = 100 °C	f = 25 kHz; $\hat{B}$ = 200 mT; T = 100 °C	f = 100 kHz; $\hat{B}$ = 100 mT; T = 100 °C	f = 100 kHz; $\hat{B}$ = 200 mT; T = 25 °C	f = 100 kHz; $\hat{B}$ = 200 mT; T = 100 °C	f = 400 kHz; $\hat{B}$ = 50 mT; T = 100 °C
3C81	≥320	≤ 4.7	–	–	–	–
3C90	≥320	≤ 2.4	≤ 2.9	–	–	–
3C91	≥320	–	≤ 1.8(1)	–	≤ 9.4(1)	–
3C92	≥370	–	≤ 2.3	–	≤ 12	–
3C94	≥320	–	≤ 2.3	–	≤ 12	–
3C95	≥320	–	–	≤ 14.3	≤ 13.6	–
3F3	≥320	–	≤ 2.7	–	–	≤ 5.0

Note

1. Measured at 60 °C.

COIL FORMER

General data for E42/21/20 coil former

PARAMETER	SPECIFICATION
Coil former material	polyamide (PA6.6), glass reinforced, flame retardant in accordance with *"UL 94-HB"*; UL file number E41938(M)
Maximum operating temperature	105 °C, *"IEC 60085"*, class A

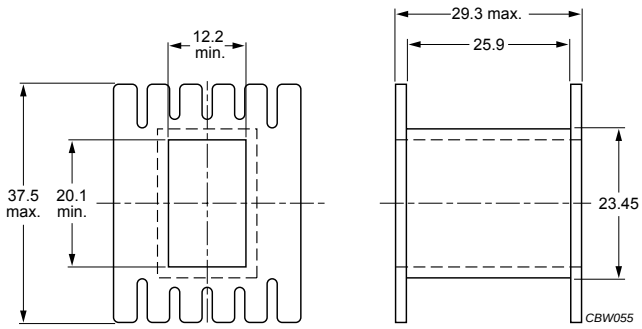

Dimensions in mm.

Fig.2 E42/21/20 coil former.

Winding data and area product for E42/21/20 coil former without pins

NUMBER OF SECTIONS	MINIMUM WINDING AREA (mm^2)	NOMINAL WINDING WIDTH (mm)	AVERAGE LENGTH OF TURN (mm)	AREA PRODUCT Ae x Aw (mm^4)	TYPE NUMBER
1	173	25.9	100	40300	CP-E42/21/20-1S

General data for 12-pins E42/21/20 coil former

PARAMETER	SPECIFICATION
Coil former material	polyamide (PA6.6), glass reinforced, flame retardant in accordance with *"UL 94-HB"*; UL file number E41938(M)
Pin material	copper-tin alloy (CuSn), tin (Sn) plated
Maximum operating temperature	105 °C, *"IEC 60085"*, class A
Resistance to soldering heat	*"IEC 60068-2-20"*, Part 2, Test Tb, method 1B: 350 °C, 3.5 s
Solderability	*"IEC 60068-2-20"*, Part 2, Test Ta, method 1: 235 °C, 2 s

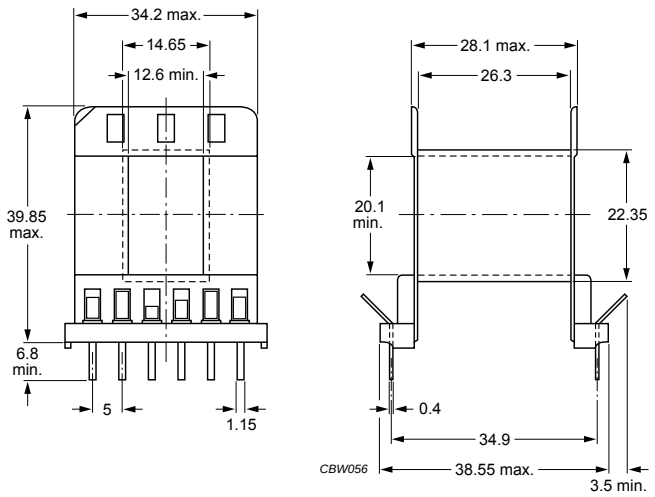

Dimensions in mm.

Fig.3 E42/21/20 coil former; 12-pins.

Winding data and area product for 12-pins E42/21/20 coil former

NUMBER OF SECTIONS	MINIMUM WINDING AREA (mm^2)	NOMINAL WINDING WIDTH (mm)	AVERAGE LENGTH OF TURN (mm)	AREA PRODUCT Ae x Aw (mm^4)	TYPE NUMBER
1	255	26.3	78.5	59400	CPH-E42/20-1S-12PD-Z

CORE SETS

Effective core parameters

SYMBOL	PARAMETER	VALUE	UNIT
Σ(l/A)	core factor (C1)	0.614	mm^{-1}
V_e	effective volume	34200	mm^3
l_e	effective length	145	mm
A_e	effective area	236	mm^2
A_{min}	minimum area	234	mm^2
m	mass of core half	≈ 82	g

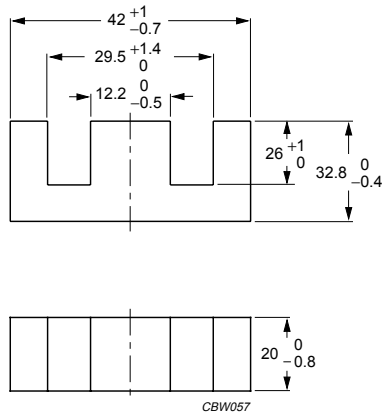

Dimensions in mm.

Fig.1 E42/33/20 core half.

Core halves

A_L measured in combination with a non-gapped core half, clamping force for A_L measurements 40 ±20 N, unless stated otherwise.

GRADE	A_L (nH)	μ_e	TOTAL AIR GAP (μm)	TYPE NUMBER
3C90	100 ±5%(1)	≈ 49	≈ 5480	E42/33/20-3C90-E100
	160 ±5%(1)	≈ 78	≈ 2840	E42/33/20-3C90-E160
	250 ±5%(1)	≈ 122	≈ 1540	E42/33/20-3C90-E250
	315 ±5%	≈ 154	≈ 1140	E42/33/20-3C90-A315
	400 ±8%	≈ 196	≈ 840	E42/33/20-3C90-A400
	630 ±15%	≈ 308	≈ 470	E42/33/20-3C90-A630
	4000 ±25%	≈ 1960	≈ 0	E42/33/20-3C90
3C92 des	2900 ±25%	≈ 1420	≈ 0	E42/33/20-3C92
3C94	4000 ±25%	≈ 1960	≈ 0	E42/33/20-3C94
3C95 des	4990 ±25%	≈ 2440	≈ 0	E42/33/20-3C95
3F3	100 ±5%(1)	≈ 49	≈ 5480	E42/33/20-3F3-E100
	160 ±5%(1)	≈ 78	≈ 2840	E42/33/20-3F3-E160
	250 ±5%(1)	≈ 122	≈ 1540	E42/33/20-3F3-E250
	315 ±5%	≈ 154	≈ 1140	E42/33/20-3F3-A315
	400 ±8%	≈ 196	≈ 840	E42/33/20-3F3-A400
	630 ±15%	≈ 308	≈ 470	E42/33/20-3F3-A630
	3700 ±25%	≈ 1810	≈ 0	E42/33/20-3F3

1. Measured in combination with an equal gapped core half.

Properties of core sets under power conditions

GRADE	B (mT) at	CORE LOSS (W) at				
	H = 250 A/m; f = 25 kHz; T = 100 °C	f = 25 kHz; $\hat{B}$ = 200 mT; T = 100 °C	f = 100 kHz; $\hat{B}$ = 100 mT; T = 100 °C	f = 100 kHz; $\hat{B}$ = 200 mT; T = 25 °C	f = 100 kHz; $\hat{B}$ = 200 mT; T = 100 °C	f = 400 kHz; $\hat{B}$ = 50 mT; T = 100 °C
3C90	≥330	≤ 3.6	≤ 4.2	–	–	–
3C92	≥370	–	≤ 3.4	–	≤ 20	–
3C94	≥330	–	≤ 3.4	–	≤ 20	–
3C95	≥330	–	–	≤ 21.5	≤ 20.5	–
3F3	≥320	–	≤ 4.0	–	–	≤ 7.3

CORE SETS

Effective core parameters

SYMBOL	PARAMETER	VALUE	UNIT
Σ(l/A)	core factor (C1)	0.380	mm^{-1}
V_e	effective volume	20800	mm^3
l_e	effective length	88.9	mm
A_e	effective area	234	mm^2
A_{min}	minimum area	226	mm^2
m	mass of core half	≈ 53	g

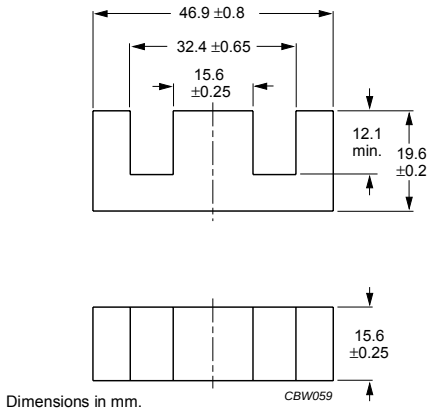

Fig.1 E47/20/16 core half.

Core halves

A_L measured in combination with a non-gapped core half, clamping force for A_L measurements 40 ±20 N, unless stated otherwise.

GRADE	A_L (nH)	μ_e	TOTAL AIR GAP (μm)	TYPE NUMBER
3C81	100 ±5%(1)	≈ 30	≈ 5080	E47/20/16-3C81-E100
	160 ±5%(1)	≈ 48	≈ 2720	E47/20/16-3C81-E160
	250 ±5%(1)	≈ 76	≈ 1540	E47/20/16-3C81-E250
	315 ±5%(1)	≈ 95	≈ 1140	E47/20/16-3C81-E315
	400 ±8%(1)	≈ 121	≈ 860	E47/20/16-3C81-E400
	630 ±10%	≈ 190	≈ 490	E47/20/16-3C81-A630
	7540 ±25%	≈ 2280	≈ 0	E47/20/16-3C81
3C90	100 ±5%(1)	≈ 30	≈ 5080	E47/20/16-3C90-E100
	160 ±5%(1)	≈ 48	≈ 2720	E47/20/16-3C90-E160
	250 ±5%(1)	≈ 76	≈ 1540	E47/20/16-3C90-E250
	315 ±5%(1)	≈ 95	≈ 1140	E47/20/16-3C90-E315
	400 ±8%(1)	≈ 121	≈ 860	E47/20/16-3C90-E400
	630 ±10%	≈ 190	≈ 490	E47/20/16-3C90-A630
	5500 ±25%	≈ 1660	≈ 0	E47/20/16-3C90
3C91 des	7540 ±25%	≈ 2280	≈ 0	E47/20/16-3C91
3C92 des	4400 ±25%	≈ 1330	≈ 0	E47/20/16-3C92
3C94	5600 ±25%	≈ 1690	≈ 0	E47/20/16-3C94
3C95 des	7540 ±25%	≈ 2280	≈ 0	E47/20/16-3C95

GRADE	A_L (nH)	μ_e	TOTAL AIR GAP (μm)	TYPE NUMBER
3F3	100 ±5%[1]	≈ 30	≈ 5080	E47/20/16-3F3-E100
	160 ±5%[1]	≈ 48	≈ 2720	E47/20/16-3F3-E160
	250 ±5%[1]	≈ 76	≈ 1540	E47/20/16-3F3-E250
	315 ±5%[1]	≈ 95	≈ 1140	E47/20/16-3F3-E315
	400 ±8%[1]	≈ 121	≈ 860	E47/20/16-3F3-E400
	630 ±10%	≈ 190	≈ 490	E47/20/16-3F3-A630
	5100 ±25%	≈ 1540	≈ 0	E47/20/16-3F3

Note

1. Measured in combination with an equal gapped core half.

Properties of core sets under power conditions

GRADE	B (mT) at	CORE LOSS (W) at				
	H = 250 A/m; f = 25 kHz; T = 100 °C	f = 25 kHz; $\hat{B}$ = 200 mT; T = 100 °C	f = 100 kHz; $\hat{B}$ = 100 mT; T = 100 °C	f = 100 kHz; $\hat{B}$ = 200 mT; T = 25 °C	f = 100 kHz; $\hat{B}$ = 200 mT; T = 100 °C	f = 400 kHz; $\hat{B}$ = 50 mT; T = 100 °C
3C81	≥320	≤ 4.3	–	–	–	–
3C90	≥320	≤ 2.3	≤ 2.7	–	–	–
3C91	≥320	–	≤ 1.7[1]	–	≤ 8.8[1]	–
3C92	≥370	–	≤ 2.1	–	≤ 11	–
3C94	≥320	–	≤ 2.1	–	≤ 11	–
3C95	≥320	–	–	≤ 13.1	≤ 12.5	–
3F3	≥320	–	≤ 2.5	–	–	≤ 4.0

Note

1. Measured at 60 °C.

COIL FORMERS

General data for E47/20/16 coil former without pins

PARAMETER	SPECIFICATION
Coil former material	polyamide (PA6.6), glass reinforced, flame retardant in accordance with *"UL 94V-2"*; UL file number E41938(M)
Maximum operating temperature	130 °C, *"IEC 60085"*, class B

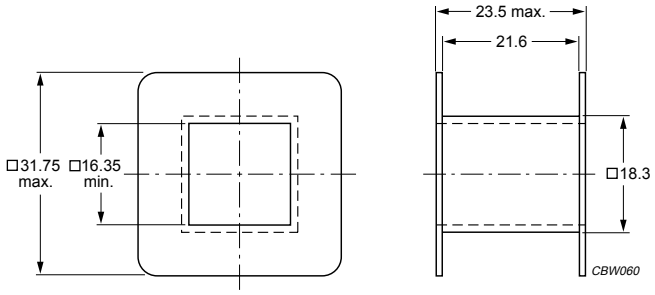

Dimensions in mm.

Fig.2 E47/20/16 coil former.

Winding data and area product for E47/20/16 coil former without pins

NUMBER OF SECTIONS	MINIMUM WINDING AREA (mm^2)	NOMINAL WINDING WIDTH (mm)	AVERAGE LENGTH OF TURN (mm)	AREA PRODUCT Ae x Aw (mm^4)	TYPE NUMBER
1	130	21.6	93.3	30400	CP-E47/20/16-1S

General data for 12-pins E47/20/16 coil former

PARAMETER	SPECIFICATION
Coil former material	polyamide (PA6.6), glass reinforced, flame retardant in accordance with *"UL 94-HB"*; UL file number E41938(M)
Maximum operating temperature	130 °C, *"IEC 60085"*, class B
Pin material	copper-zinc alloy (CuZn), tin (Sn) plated
Resistance to soldering heat	*"IEC 60068-2-20"*, Part 2, Test Tb, method 1B: 350 °C, 3.5 s
Solderability	*"IEC 60068-2-20"*, Part 2, Test Ta, method 1: 235 °C, 2 s

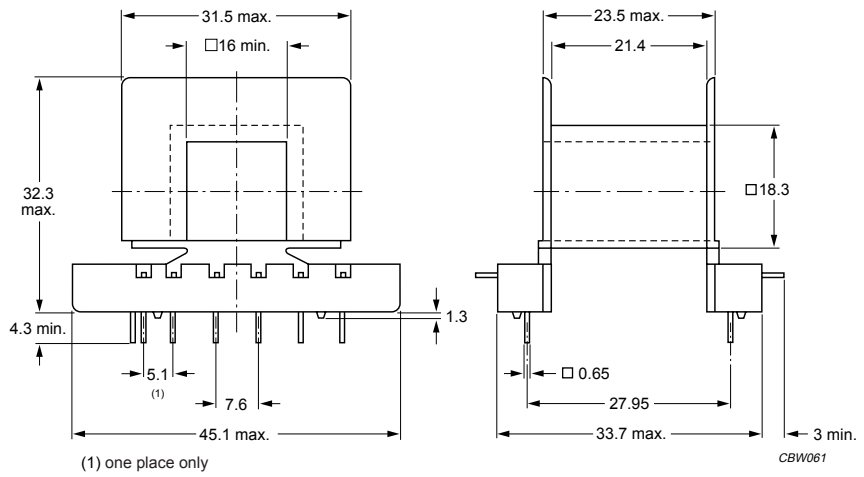

(1) one place only

Dimensions in mm.

Fig.3 E47/20/16 coil former: 12-pins.

Winding data and area product for 12-pins E47/20/16 coil former

NUMBER OF SECTIONS	MINIMUM WINDING AREA (mm^2)	NOMINAL WINDING WIDTH (mm)	AVERAGE LENGTH OF TURN (mm)	AREA PRODUCT Ae x Aw (mm^4)	TYPE NUMBER
1	131	21.4	94.7	30650	CPH-E47/16-1S-12PD-Z

CORE SETS

Effective core parameters

SYMBOL	PARAMETER	VALUE	UNIT
Σ(l/A)	core factor (C1)	0.350	mm^{-1}
V_e	effective volume	44000	mm^3
l_e	effective length	124	mm
A_e	effective area	353	mm^2
A_{min}	minimum area	345	mm^2
m	mass of core half	≈ 108	g

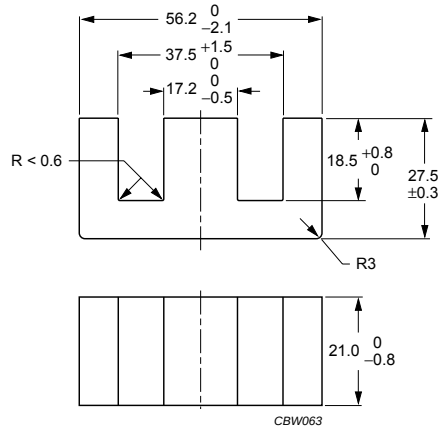

Dimensions in mm.

Fig.1 E55/28/21 core half.

Core halves

A_L measured in combination with a non-gapped core half, clamping force for A_L measurements 40 ±20 N, unless stated otherwise.

GRADE	A_L (nH)	μ_e	TOTAL AIR GAP (μm)	TYPE NUMBER
3C81	100 ±5%(1)	≈ 28	≈ 8740	E55/28/21-3C81-E100
	160 ±5%(1)	≈ 45	≈ 4560	E55/28/21-3C81-E160
	250 ±5%(1)	≈ 70	≈ 2500	E55/28/21-3C81-E250
	315 ±5%(1)	≈ 88	≈ 1840	E55/28/21-3C81-E315
	400 ±8%(1)	≈ 112	≈ 1360	E55/28/21-3C81-E400
	630 ±10%(1)	≈ 176	≈ 780	E55/28/21-3C81-E630
	8625 ±25%	≈ 2410	≈ 0	E55/28/21-3C81
3C90	100 ±5%(1)	≈ 28	≈ 8740	E55/28/21-3C90-E100
	160 ±5%(1)	≈ 45	≈ 4560	E55/28/21-3C90-E160
	250 ±5%(1)	≈ 70	≈ 2500	E55/28/21-3C90-E250
	315 ±5%(1)	≈ 88	≈ 1840	E55/28/21-3C90-E315
	400 ±8%(1)	≈ 112	≈ 1360	E55/28/21-3C90-E400
	630 ±10%(1)	≈ 176	≈ 780	E55/28/21-3C90-E630
	6300 ±25%	≈ 1760	≈ 0	E55/28/21-3C90
3C91 des	8625 ±25%	≈ 2410	≈ 0	E55/28/21-3C91
3C92 des	4700 ±25%	≈ 1310	≈ 0	E55/28/21-3C92
3C94	6400 ±25%	≈ 1790	≈ 0	E55/28/21-3C94

GRADE	A_L (nH)	μ_e	TOTAL AIR GAP (μm)	TYPE NUMBER
3C95 des	8625 ±25%	≈ 2410	≈ 0	E55/28/21-3C95
3F3	100 ±5%(1)	≈ 28	≈ 8740	E55/28/21-3F3-E100
	160 ±5%(1)	≈ 45	≈ 4560	E55/28/21-3F3-E160
	250 ±5%(1)	≈ 70	≈ 2500	E55/28/21-3F3-E250
	315 ±5%(1)	≈ 88	≈ 1840	E55/28/21-3F3-E315
	400 ±8%(1)	≈ 112	≈ 1360	E55/28/21-3F3-E400
	630 ±10%(1)	≈ 176	≈ 780	E55/28/21-3F3-E630
	5700 ±25%	≈1590	≈ 0	E55/28/21-3F3

Note

1. Measured in combination with an equal gapped core half.

Properties of core sets under power conditions

GRADE	B (mT) at	CORE LOSS (W) at				
	H = 250 A/m; f = 25 kHz; T = 100 °C	f = 25 kHz; $\hat{B}$ = 200 mT; T = 100 °C	f = 100 kHz; $\hat{B}$ = 100 mT; T = 100 °C	f = 100 kHz; $\hat{B}$ = 200 mT; T = 25 °C	f = 100 kHz; $\hat{B}$ = 200 mT; T = 100 °C	f = 400 kHz; $\hat{B}$ = 50 mT; T = 100 °C
3C81	≥320	≤ 9.0	–	–	–	–
3C90	≥320	≤ 4.8	≤ 5.9	–	–	–
3C91	≥320	–	≤ 3.5(1)	–	≤ 20(1)	–
3C92	≥370	–	≤ 3.8	–	≤ 27	–
3C94	≥320	–	≤ 3.8	–	≤ 27	–
3C95	≥320	–	–	≤ 27.7	≤ 26.4	–
3F3	≥320	–	≤ 5.6	–	–	≤ 10

Note

1. Measured at 60 °C.

COIL FORMERS

General data for E55/28/21 coil former without pins

PARAMETER	SPECIFICATION
Coil former material	polyamide (PA6.6), glass reinforced, flame retardant in accordance with *"UL 94-HB"*; UL file number E41613(M)
Maximum operating temperature	130 °C, *"IEC 60085"*, class B

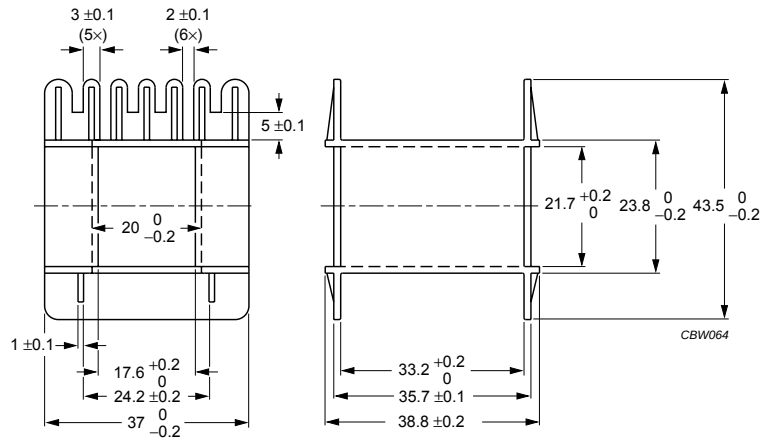

Dimensions in mm.

Fig.2 E55/28/21 coil former (E).

Winding data and area product for E55/28/21 coil former without pins (E)

NUMBER OF SECTIONS	MINIMUM WINDING AREA (mm^2)	MINIMUM WINDING WIDTH (mm)	AVERAGE LENGTH OF TURN (mm)	AREA PRODUCT Ae x Aw (mm^4)	TYPE NUMBER
1	250	33.2	116	88250	CP-E55/28/21-1S

General data for E55/28/21 coil former without pins (A)

PARAMETER	SPECIFICATION
Coil former material	polyamide (PA6.6), glass reinforced, flame retardant in accordance with *"UL 94-HB"*; UL file number E41938(M)
Maximum operating temperature	130 °C, *"IEC 60085"*, class B

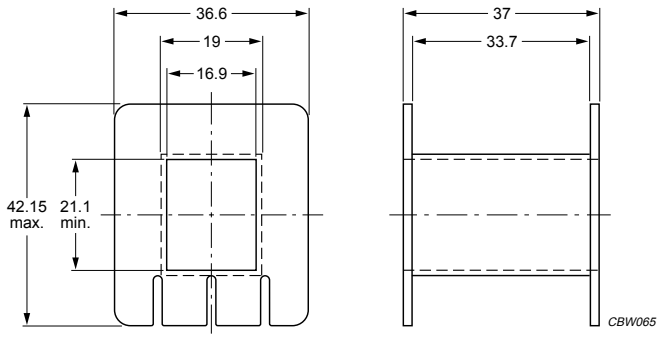

Dimensions in mm.

Fig.3 E55/28/21 coil former (A).

Winding data and area product for E55/28/21 coil former without pins (A)

NUMBER OF SECTIONS	MINIMUM WINDING AREA (mm^2)	NOMINAL WINDING WIDTH (mm)	AVERAGE LENGTH OF TURN (mm)	AREA PRODUCT Ae x Aw (mm^4)	TYPE NUMBER
1	277	33.7	113	97800	CP-E55/28/21-1S-A

General data for 14-pins E55/28/21 coil former

PARAMETER	SPECIFICATION
Coil former material	polyamide (PA6.6), glass reinforced, flame retardant in accordance with *"UL 94-HB"*; UL file number E41938(M)
Pin material	copper-zinc alloy (CuZn), tin (Sn) plated
Maximum operating temperature	105 °C, *"IEC 60085",* class A
Resistance to soldering heat	*"IEC 60068-2-20"*, Part 2, Test Tb, method 1B: 350 °C, 3.5 s
Solderability	*"IEC 60068-2-20"*, Part 2, Test Ta, method 1: 235 °C, 2 s

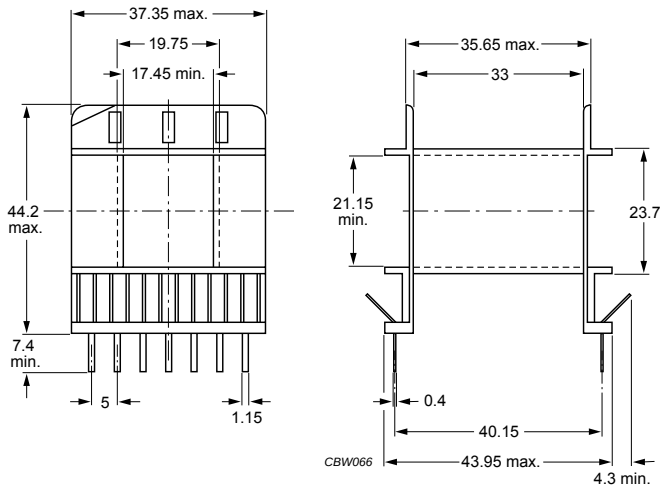

Dimensions in mm.

Fig.4 E55/28/21 coil former; 14-pins.

Winding data and area product for 14-pins E55/28/21 coil former

NUMBER OF SECTIONS	MINIMUM WINDING AREA (mm^2)	NOMINAL WINDING WIDTH (mm)	AVERAGE LENGTH OF TURN (mm)	AREA PRODUCT Ae x Aw (mm^4)	TYPE NUMBER
1	278	33	119	98100	CPH-E55/28/21-1S-14P-Z

MOUNTING PARTS **GENERAL DATA FOR MOUNTING PARTS**

ITEM	REMARKS	FIGURE	TYPE NUMBER
Clasp	steel, zinc (Zn) plated	5	CLA-E55/28/21
Spring	steel, zinc (Zn) plated	6	SPR-E55/28/21

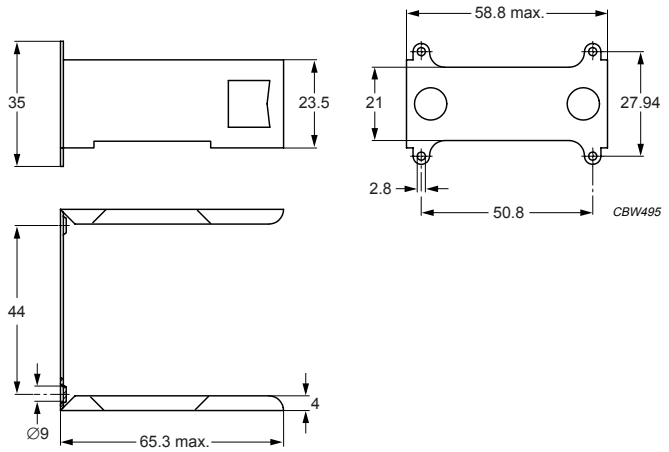

Dimensions in mm.

Fig.5 E55/28/21 clasp.

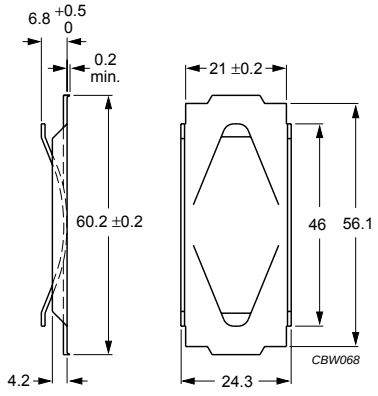

Dimensions in mm.

Fig.6 E55/28/21 spring.

CORE SETS

Effective core parameters

SYMBOL	PARAMETER	VALUE	UNIT
Σ(l/A)	core factor (C1)	0.239	mm^{-1}
V_e	effective volume	52000	mm^3
l_e	effective length	123	mm
A_e	effective area	420	mm^2
A_{min}	minimum area	411	mm^2
m	mass of core half	≈130	g

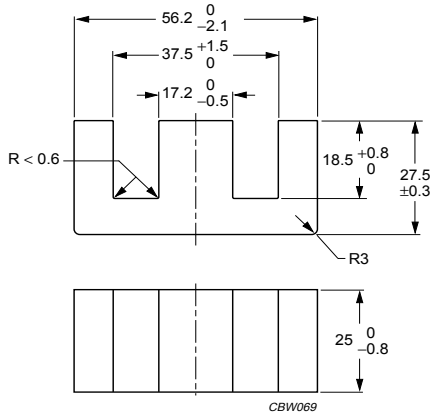

Dimensions in mm.

Fig.1 E55/28/25 core half.

Core halves

A_L measured in combination with a non-gapped core half, clamping force for A_L measurements 60 ±20 N, unless stated otherwise.

GRADE	A_L (nH)	μ_e	TOTAL AIR GAP (μm)	TYPE NUMBER
3C90	100 ±5%(1)	≈ 23	≈ 10440	E55/28/25-3C90-E100
	160 ±5%(1)	≈ 37	≈ 5520	E55/28/25-3C90-E160
	250 ±5%(1)	≈ 58	≈ 3040	E55/28/25-3C90-E250
	315 ±5%(1)	≈ 73	≈ 2240	E55/28/25-3C90-E315
	400 ±8%(1)	≈ 93	≈ 1660	E55/28/25-3C90-E400
	630 ±10%(1)	≈ 147	≈ 940	E55/28/25-3C90-E630
	8000 ±25%	≈ 1860	≈ 0	E55/28/25-3C90
3C92 des	5800 ±25%	≈ 1100	≈ 0	E55/28/25-3C92
3C94	8000 ±25%	≈ 1860	≈ 0	E55/28/25-3C94
3C95 des	9860 ±25%	≈ 2300	≈ 0	E55/28/25-3C95
3F3	100 ±5%(1)	≈ 23	≈ 10440	E55/28/25-3F3-E100
	160 ±5%(1)	≈ 37	≈ 5520	E55/28/25-3F3-E160
	250 ±5%(1)	≈ 58	≈ 3040	E55/28/25-3F3-E250
	315 ±5%(1)	≈ 73	≈ 2240	E55/28/25-3F3-E315
	400 ±8%(1)	≈ 93	≈ 1660	E55/28/25-3F3-E400
	630 ±10%(1)	≈ 147	≈ 940	E55/28/25-3F3-E630
	7400 ±25%	≈ 1730	≈ 0	E55/28/25-3F3

Note

1. Measured in combination with an equal gapped core half.

Properties of core sets under power conditions

GRADE	B (mT) at	CORE LOSS (W) at				
	H = 250 A/m; f = 25 kHz; T = 100 °C	f = 25 kHz; $\hat{B}$ = 200 mT; T = 100 °C	f = 100 kHz; $\hat{B}$ = 100 mT; T = 100 °C	f = 100 kHz; $\hat{B}$ = 200 mT; T = 25 °C	f = 100 kHz; $\hat{B}$ = 200 mT; T = 100 °C	f = 400 kHz; $\hat{B}$ = 50 mT; T = 100 °C
3C90	≥330	≤ 5.7	≤ 7.3	–	–	–
3C92	≥370	–	≤ 4.8	–	≤ 31	–
3C94	≥330	–	≤ 4.8	–	≤ 31	–
3C95	≥330	–	–	≤ 32.8	≤ 31.2	–
3F3	≥310	–	≤ 6.6	–	–	≤ 12.7

CORE SETS

Effective core parameters

SYMBOL	PARAMETER	VALUE	UNIT
$\Sigma(l/A)$	core factor (C1)	0.320	mm^{-1}
V_e	effective volume	36000	mm^3
l_e	effective length	107	mm
A_e	effective area	337	mm^2
A_{min}	minimum area	337	mm^2
m	mass of core half	≈ 90	g

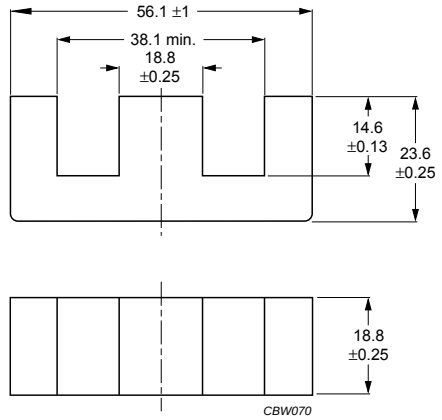

Dimensions in mm.

Fig.1 E56/24/19 core half.

Core halves

A_L measured in combination with a non-gapped core half, clamping force for A_L measurements 60 ±20 N, unless stated otherwise.

GRADE	A_L (nH)	μ_e	TOTAL AIR GAP (μm)	TYPE NUMBER
3C81	100 ±5%(1)	≈ 25	≈ 7780	E56/24/19-3C81-E100
	160 ±5%(1)	≈ 40	≈ 4160	E56/24/19-3C81-E160
	250 ±5%(1)	≈ 63	≈ 2320	E56/24/19-3C81-E250
	315 ±5%(1)	≈ 80	≈ 1720	E56/24/19-3C81-E315
	400 ±8%(1)	≈ 101	≈ 1280	E56/24/19-3C81-E400
	630 ±10%(1)	≈ 159	≈ 740	E56/24/19-3C81-E630
	9500 ±25%	≈ 2400	≈ 0	E56/24/19-3C81
3C90	100 ±5%(1)	≈ 25	≈ 7780	E56/24/19-3C90-E100
	160 ±5%(1)	≈ 40	≈ 4160	E56/24/19-3C90-E160
	250 ±5%(1)	≈ 63	≈ 2320	E56/24/19-3C90-E250
	315 ±5%(1)	≈ 80	≈ 1720	E56/24/19-3C90-E315
	400 ±8%(1)	≈ 101	≈ 1280	E56/24/19-3C90-E400
	630 ±10%(1)	≈ 159	≈ 740	E56/24/19-3C90-E630
	6900 ±25%	≈ 1740	≈ 0	E56/24/19-3C90
3C91 des	9500 ±25%	≈ 2400	≈ 0	E56/24/19-3C91
3C92 des	5200 ±25%	≈ 1320	≈ 0	E56/24/19-3C92
3C94	6900 ±25%	≈ 1740	≈ 0	E56/24/19-3C94
3C95 des	9500 ±25%	≈ 2400	≈ 0	E56/24/19-3C95

Note

1. Measured in combination with an equal gapped core half.

Properties of core sets under power conditions

GRADE	B (mT) at	CORE LOSS (W) at				
	H = 250 A/m; f = 25 kHz; T = 100 °C	f = 25 kHz; $\hat{B}$ = 200 mT; T = 100 °C	f = 100 kHz; $\hat{B}$ = 100 mT; T = 100 °C	f = 100 kHz; $\hat{B}$ = 200 mT; T = 25 °C	f = 100 kHz; $\hat{B}$ = 200 mT; T = 100 °C	f = 400 kHz; $\hat{B}$ = 50 mT; T = 100 °C
3C81	≥320	≤ 7.4	–	–	–	–
3C90	≥320	≤ 3.6	≤ 4.8	–	–	–
3C91	≥320	–	≤ 2.7[1]	–	≤ 16[1]	–
3C92	≥370	–	≤ 3.6	–	≤ 22	–
3C94	≥320	–	≤ 3.6	–	≤ 22	–
3C95	≥320	–	–	≤ 22.7	≤ 21.6	–

Note

1. Measured at 60 °C.

COIL FORMERS

General data for E56/24/19 coil former without pins

PARAMETER	SPECIFICATION
Coil former material	polyamide (PA6.6), glass reinforced, flame retardant in accordance with *"UL 94V-2"*; UL file number E41938(M)
Maximum operating temperature	130 °C, *"IEC 60085"*, class B

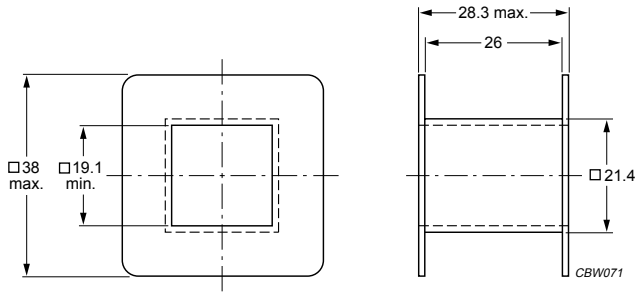

Dimensions in mm.

Fig.2 E56/24/19 coil former.

Winding data and area product for E56/24/19 coil former without pins

NUMBER OF SECTIONS	MINIMUM WINDING AREA (mm^2)	NOMINAL WINDING WIDTH (mm)	AVERAGE LENGTH OF TURN (mm)	AREA PRODUCT Ae x Aw (mm^4)	TYPE NUMBER
1	222	26.1	112	74800	CP-E56/24/19-1S

General data for 12-pins E56/24/19 coil former

PARAMETER	SPECIFICATION
Coil former material	Polyamide (PA66), glass reinforced, flame retardant in accordance with *"UL 94V-0"*;UL file number E41938
Maximum operating temperature	130 °C, *"IEC 60085"*, class B
Pin material	copper-zinc alloy (CuZn), tin (Sn) plated
Resistance to soldering heat	*"IEC 60068-2-20"*, Part 2, Test Tb, method 1B: 350 °C, 3.5 s
Solderability	*"IEC 60068-2-20"*, Part 2, Test Ta, method 1: 235 °C, 2 s

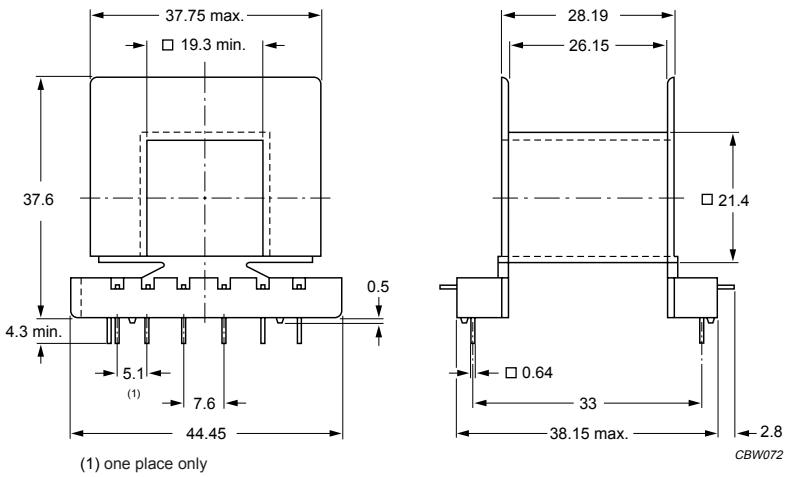

Dimensions in mm.

Fig.3 E56/24/19 coil former; 12-pins.

Winding data and area product for 12-pins E56/24/19 coil former

NUMBER OF SECTIONS	MINIMUM WINDING AREA (mm^2)	NOMINAL WINDING WIDTH (mm)	AVERAGE LENGTH OF TURN (mm)	AREA PRODUCT Ae x Aw (mm^4)	TYPE NUMBER
1	205	26.2	114	69100	CPH-E56/24/19-1S-12PD-Z

CORE SETS

Effective core parameters

SYMBOL	PARAMETER	VALUE	UNIT
Σ(l/A)	core factor (C1)	0.274	mm^{-1}
V_e	effective volume	79000	mm^3
l_e	effective length	147	mm
A_e	effective area	540	mm^2
A_{min}	minimum area	530	mm^2
m	mass of core half	≈205	g

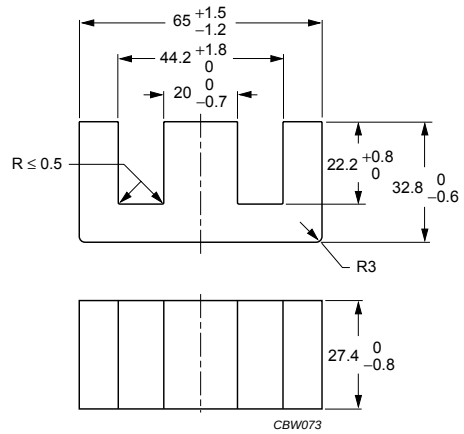

Dimensions in mm.

Fig.1 E65/32/27 core half.

Core halves

A_L measured in combination with a non-gapped core half, clamping force for A_L measurements 60 ±20 N, unless stated otherwise.

GRADE	A_L (nH)	μ_e	TOTAL AIR GAP (μm)	TYPE NUMBER
3C90	100 ±5%(1)	≈ 22	≈ 14380	E65/32/27-3C90-E100
	160 ±5%(1)	≈ 35	≈ 7560	E65/32/27-3C90-E160
	250 ±5%(1)	≈ 54	≈ 4100	E65/32/27-3C90-E250
	315 ±5%(1)	≈ 68	≈ 3020	E65/32/27-3C90-E315
	400 ±8%(1)	≈ 87	≈ 2200	E65/32/27-3C90-E400
	630 ±10%(1)	≈ 136	≈ 1240	E65/32/27-3C90-E630
	8600 ±25%	≈ 1860	≈ 0	E65/32/27-3C90
3C92 des	6000 ±25%	≈ 1310	≈ 0	E65/32/27-3C92
3C94	8600 ±25%	≈ 1860	≈ 0	E65/32/27-3C94
3C95 des	10600 ±25%	≈ 2300	≈ 0	E65/32/27-3C95
3F3	100 ±5%(1)	≈ 22	≈ 14380	E65/32/27-3F3-E100
	160 ±5%(1)	≈ 35	≈ 7560	E65/32/27-3F3-E160
	250 ±5%(1)	≈ 54	≈ 4100	E65/32/27-3F3-E250
	315 ±5%(1)	≈ 68	≈ 3020	E65/32/27-3F3-E315
	400 ±8%(1)	≈ 87	≈ 2200	E65/32/27-3F3-E400
	630 ±10%(1)	≈ 136	≈ 1240	E65/32/27-3F3-E630
	7300 ±25%	≈ 1580	≈ 0	E65/32/27-3F3

Note

1. Measured in combination with an equal gapped core half.

Core halves of high permeability grades

Clamping force for A_L measurements, 60 ±20 N.

GRADE	A_L (nH)	μ_e	AIR GAP (μm)	TYPE NUMBER
3C11	16700 ±25%	≈ 3620	≈ 0	E65/32/27-3C11

Properties of core sets under power conditions

GRADE	B (mT) at	CORE LOSS (W) at				
	H = 250 A/m; f = 25 kHz; T = 100 °C	f = 25 kHz; $\hat{B}$ = 200 mT; T = 100 °C	f = 100 kHz; $\hat{B}$ = 100 mT; T = 100 °C	f = 100 kHz; $\hat{B}$ = 200 mT; T = 25 °C	f = 100 kHz; $\hat{B}$ = 200 mT; T = 100 °C	f = 400 kHz; $\hat{B}$ = 50 mT; T = 100 °C
3C90	≥320	≤ 9.1	≤ 12	–	–	–
3C92	≥370	–	≤ 8.5	–	≤ 47	–
3C94	≥320	–	≤ 8.5	–	≤ 47	–
3C95	≥320	–	–	≤ 49.8	≤ 47.4	–
3F3	≥320	–	≤ 10.5	–	–	≤ 21

COIL FORMER

General data for E65/32/27 coil former without pins

PARAMETER	SPECIFICATION
Coil former material	polyethylene terephtalate (PET), glass reinforced, flame retardant in accordance with *"UL 94V-0"*; UL file number E107536
Maximum operating temperature	130 °C, *"IEC 60085",* class B

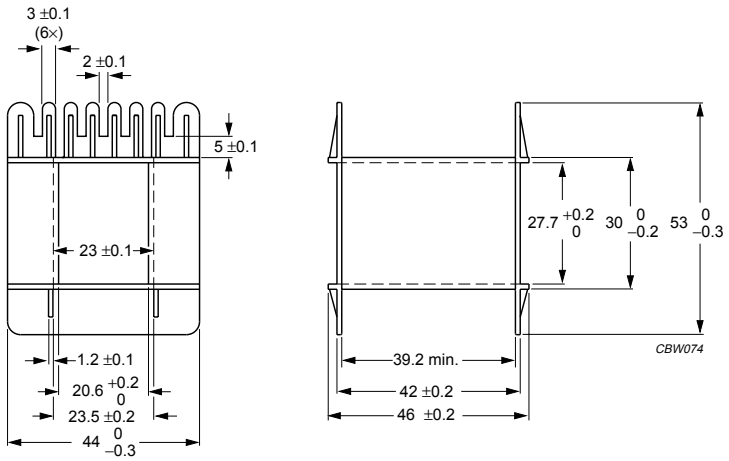

Dimensions in mm.

Fig.2 E65/32/27 coil former.

Winding data and area product for E65/32/27 coil former without pins (E)

NUMBER OF SECTIONS	MINIMUM WINDING AREA (mm^2)	NOMINAL WINDING WIDTH (mm)	AVERAGE LENGTH OF TURN (mm)	AREA PRODUCT Ae x Aw (mm^4)	TYPE NUMBER
1	394	39.2	150	213000	CP-E65-1S-T

MOUNTING PARTS

General data for mounting parts

ITEM	REMARKS	FIGURE	TYPE NUMBER
Clasp	steel, zinc (Zn) plated	3	CLA-E65/32/27
Spring	steel, zinc (Zn) plated	4	SPR-E65/32/27

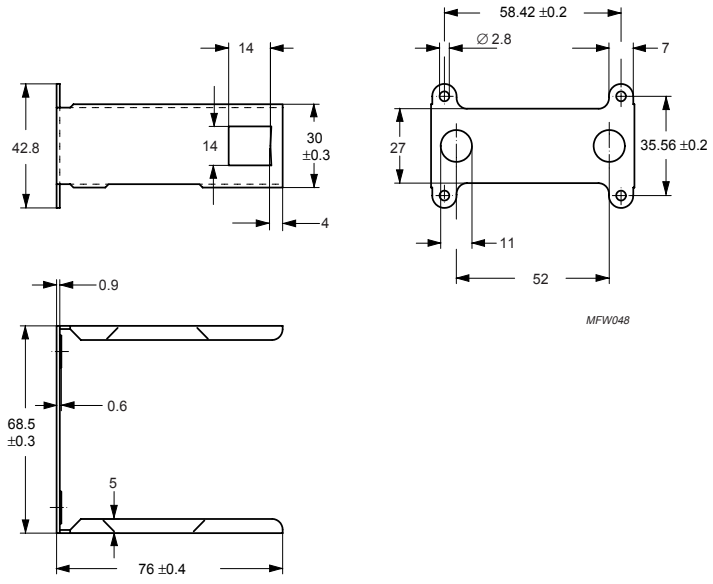

Dimensions in mm.

Fig.3 E65/32/27 clasp.

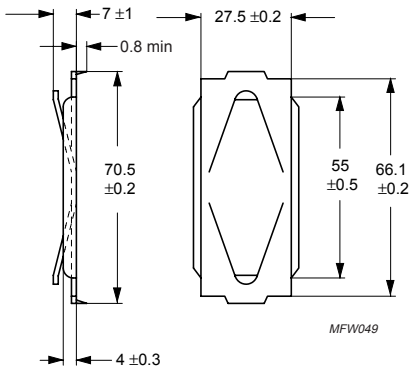

Dimensions in mm.

Fig.4 E65/32/27 spring.

CORE SETS

Effective core parameters

SYMBOL	PARAMETER	VALUE	UNIT
Σ(l/A)	core factor (C1)	0.218	mm^{-1}
V_e	effective volume	102000	mm^3
l_e	effective length	149	mm
A_e	effective area	683	mm^2
A_{min}	minimum area	676	mm^2
m	mass of core half	≈ 260	g

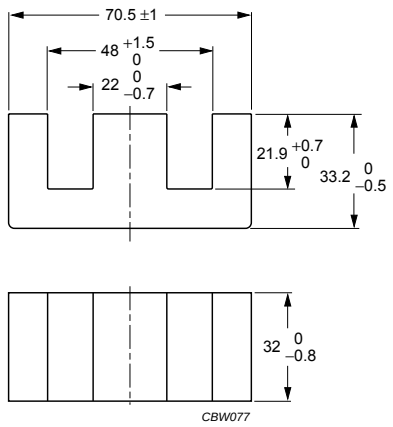

Dimensions in mm.

Fig.1 E71/33/32 core half.

Core halves

A_L measured in combination with a non-gapped core half, clamping force for A_L measurements 60 ±20 N, unless stated otherwise.

GRADE	A_L (nH)	μ_e	TOTAL AIR GAP (μm)	TYPE NUMBER
3C90	100 ±5%(1)	≈ 17	≈ 17800	E71/33/32-3C90-E100
	160 ±5%(1)	≈ 28	≈ 9620	E71/33/32-3C90-E160
	250 ±5%(1)	≈ 43	≈ 5280	E71/33/32-3C90-E250
	315 ±5%(1)	≈ 55	≈ 3900	E71/33/32-3C90-E315
	400 ±8%(1)	≈ 69	≈ 2860	E71/33/32-3C90-E400
	630 ±10%(1)	≈ 109	≈ 1620	E71/33/32-3C90-E630
	10800 ±25%	≈ 1880	≈ 0	E71/33/32-3C90
3C92 des	8000 ±25%	≈ 1390	≈ 0	E71/33/32-3C92
3C94	10800 ±25%	≈ 1880	≈ 0	E71/33/32-3C94
3C95 des	13330 ±25%	≈ 2315	≈ 0	E71/33/32-3C95
3F3	100 ±5%(1)	≈ 17	≈ 17800	E71/33/32-3F3-E100
	160 ±5%(1)	≈ 28	≈ 9620	E71/33/32-3F3-E160
	250 ±5%(1)	≈ 43	≈ 5280	E71/33/32-3F3-E250
	315 ±5%(1)	≈ 55	≈ 3900	E71/33/32-3F3-E315
	400 ±8%(1)	≈ 69	≈ 2860	E71/33/32-3F3-E400
	630 ±10%(1)	≈ 109	≈ 1620	E71/33/32-3F3-E630
	10000 ±25%	≈ 1740	≈ 0	E71/33/32-3F3

Note

1. Measured in combination with an equal gapped core half.

Properties of core sets under power conditions

GRADE	B (mT) at	CORE LOSS (W) at				
	H = 250 A/m; f = 25 kHz; T = 100 °C	f = 25 kHz; $\hat{B}$ = 200 mT; T = 100 °C	f = 100 kHz; $\hat{B}$ = 100 mT; T = 100 °C	f = 100 kHz; $\hat{B}$ = 200 mT; T = 25 °C	f = 100 kHz; $\hat{B}$ = 200 mT; T = 100 °C	f = 400 kHz; $\hat{B}$ = 50 mT; T = 100 °C
3C90	≥320	≤ 12	≤ 16.5	–	–	–
3C92	≥370	–	≤ 11.5	–	≤ 60	–
3C94	≥320	–	≤ 11.5	–	≤ 60	–
3C95	≥320	–	–	≤ 73.4	≤ 69.4	–
3F3	≥320	–	≤ 14	–	–	≤ 29

CORE SETS

Effective core parameters

SYMBOL	PARAMETER	VALUE	UNIT
$\Sigma(l/A)$	core factor (C1)	0.470	mm^{-1}
V_e	effective volume	72300	mm^3
l_e	effective length	184	mm
A_e	effective area	392	mm^2
A_{min}	minimum area	392	mm^2
m	mass of core half	≈ 180	g

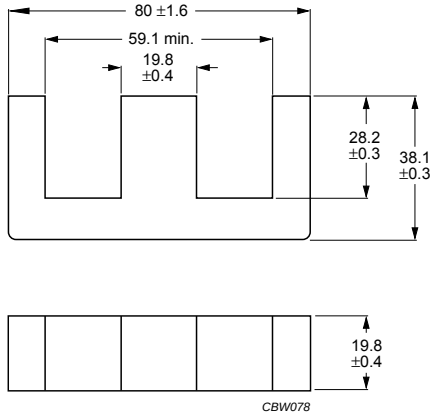

Dimensions in mm.

Fig.1 E80/38/20 core half.

Core halves

A_L measured in combination with a non-gapped core half, clamping force for A_L measurements 60 ±20 N, unless stated otherwise.

GRADE	A_L (nH)	μ_e	TOTAL AIR GAP (μm)	TYPE NUMBER
3C90	100 ±5%(1)	≈ 37	≈ 10800	E80/38/20-3C90-E100
	160 ±5%(1)	≈ 60	≈ 5540	E80/38/20-3C90-E160
	250 ±5%(1)	≈ 93	≈ 2900	E80/38/20-3C90-E250
	315 ±5%(1)	≈ 118	≈ 2120	E80/38/20-3C90-E315
	400 ±8%(1)	≈ 149	≈ 1540	E80/38/20-3C90-E400
	630 ±10%(1)	≈ 235	≈ 860	E80/38/20-3C90-E630
	5070 ±25%	≈ 1890	≈ 0	E80/38/20-3C90
3C92 des	3600 ±25%	≈ 1350	≈ 0	E80/38/20-3C92
3C94	5070 ±25%	≈ 1890	≈ 0	E80/38/20-3C94
3C95 des	6730 ±25%	≈ 2510	≈ 0	E80/38/20-3C95
3F3	100 ±5%(1)	≈ 37	≈ 10800	E80/38/20-3F3-E100
	160 ±5%(1)	≈ 60	≈ 5540	E80/38/20-3F3-E160
	250 ±5%(1)	≈ 93	≈ 2900	E80/38/20-3F3-E250
	315 ±5%(1)	≈ 118	≈ 2120	E80/38/20-3F3-E315
	400 ±8%(1)	≈ 149	≈ 1540	E80/38/20-3F3-E400
	630 ±10%(1)	≈ 235	≈ 860	E80/38/20-3F3-E630
	4590 ±25%	≈ 1710	≈ 0	E80/38/20-3F3

Note

1. Measured in combination with an equal gapped core half.

Properties of core sets under power conditions

GRADE	B (mT) at	CORE LOSS (W) at				
	H = 250 A/m; f = 25 kHz; T = 100 °C	f = 25 kHz; $\hat{B}$ = 200 mT; T = 100 °C	f = 100 kHz; $\hat{B}$ = 100 mT; T = 100 °C	f = 100 kHz; $\hat{B}$ = 200 mT; T = 25 °C	f = 100 kHz; $\hat{B}$ = 200 mT; T = 100 °C	f = 400 kHz; $\hat{B}$ = 50 mT; T = 100 °C
3C90	≥320	≤ 7.2	≤ 10	–	–	–
3C92	≥370	–	≤ 7.5	–	≤ 45	–
3C94	≥320	–	≤ 7.5	–	≤ 45	–
3C95	≥320	–	–	≤ 45.5	≤ 43.4	–
3F3	≥320	–	≤ 9.0	–	–	≤ 15.4

CORE SETS

Effective core parameters

SYMBOL	PARAMETER	VALUE	UNIT
$\Sigma(l/A)$	core factor (C1)	0.371	mm^{-1}
V_e	effective volume	202000	mm^3
l_e	effective length	274	mm
A_e	effective area	738	mm^2
A_{min}	minimum area	692	mm^2
m	mass of core half	≈ 493	g

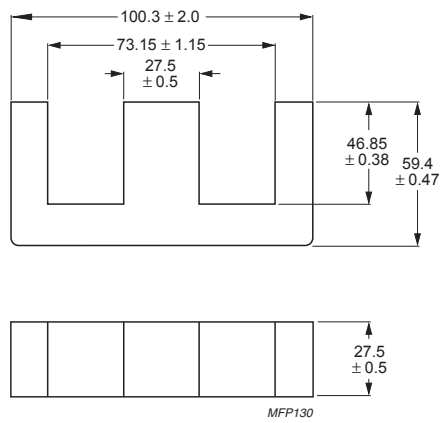

Dimensions in mm.

Fig.1 E100/60/28 core half.

Core halves

A_L measured in combination with a non-gapped core half, clamping force for A_L measurements 110 ± 30 N, unless stated otherwise.

GRADE	A_L (nH)	μ_e	AIR GAP (μm)	TYPE NUMBER
3C90	7100 ± 25 %	≈ 2100	≈ 0	E100/60/28-3C90
3C92 des	4800 ± 25 %	≈ 1420	≈ 0	E100/60/28-3C92
3C94	7100 ± 25 %	≈ 2100	≈ 0	E100/60/28-3C94
3C95 des	9010 ± 25 %	≈ 2665	≈ 0	E100/60/28-3C95

Properties of core sets under power conditions

GRADE	B (mT) at	CORE LOSS (W) at			
	H = 250 A/m; f = 25 kHz; T = 100 °C	f = 25 kHz; $\hat{B}$ = 200 mT; T = 100 °C	f = 100 kHz; $\hat{B}$ = 100 mT; T = 100 °C	f = 100 kHz; $\hat{B}$ = 200 mT; T = 25 °C	f = 100 kHz; $\hat{B}$ = 200 mT; T = 100 °C
3C90	≥ 320	≤ 34	≤ 34	–	–
3C92	≥ 370	–	≤ 27	–	–
3C94	≥ 320	–	≤ 27	–	–
3C95	≥ 320	–	–	≤ 145	≤ 137

Soft Ferrites

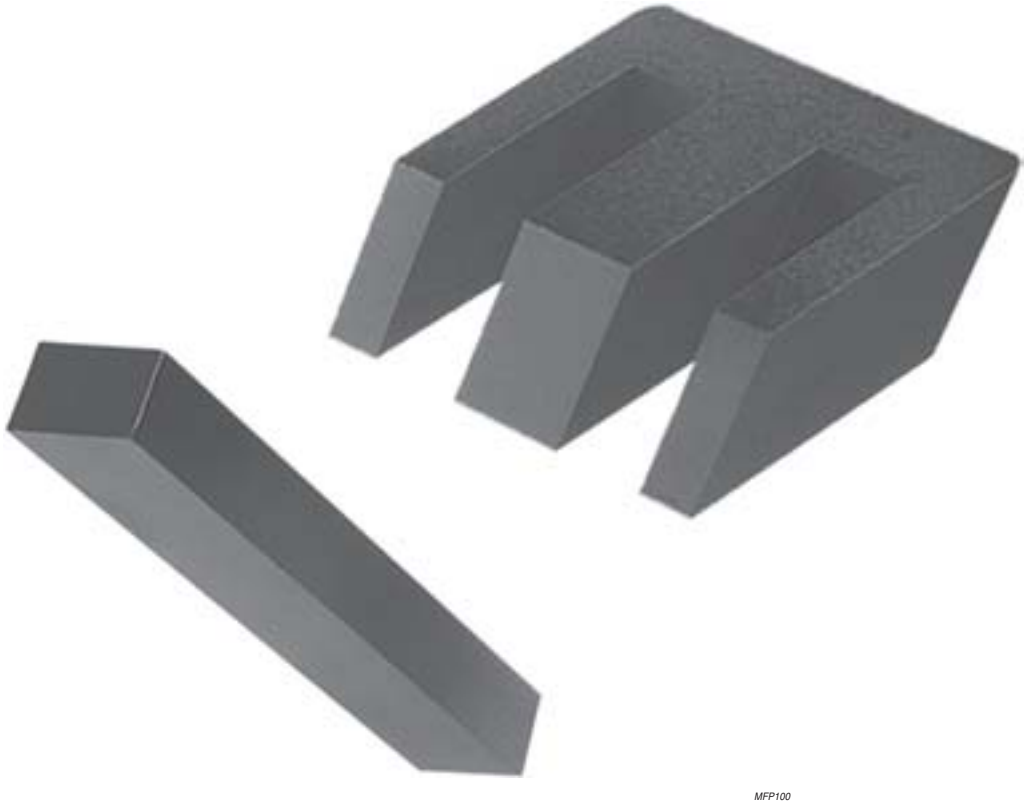
MFP100

PRODUCT OVERVIEW AND TYPE NUMBER STRUCTURE

Product overview EI cores

CORE TYPE	V_e (mm^3)	A_e (mm^2)	MASS (g)
E16/12/5	701	19.4	2.7
I16/2.4/5	–	–	0.9
E20/14/5	913	22.8	3.8
I20/2.3/5	–	–	1.1
E22/15/6	1450	33.1	5.9
I22/4/6	–	–	2.3
E25/17/6	2070	40.3	8.0
I25/3/6	–	–	2.5
E28/17/11	4120	83.7	17
I28/3.5/11	–	–	5.1
E30/21/11	6720	113	25
I30/5.5/11	–	–	8.6
E33/23/13	7910	118	31
I33/5/13	–	–	10
E35/24/10	6270	89.3	24
I35/5/10	–	–	7.4
E40/27/12	11100	143	42
I40/7.5/12	–	–	17

Note :
All effective dimensions for E/I combination

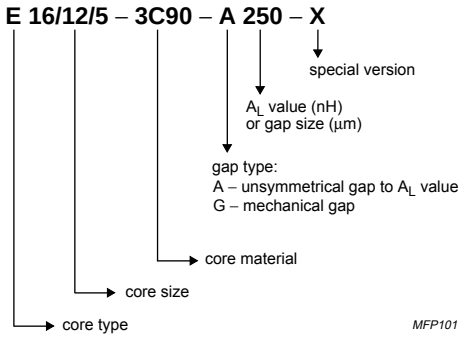

Fig.1 Type number structure for E cores.

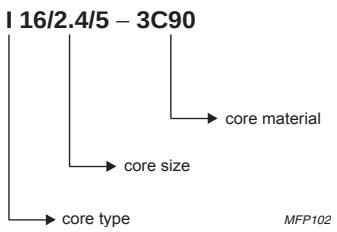

Fig.2 Type number structure for I cores.

CORES

Effective core parameters of an E / I combination

SYMBOL	PARAMETER	VALUE	UNIT
$\Sigma(l/A)$	core factor (C1)	1.85	mm^{-1}
V_e	effective volume	701	mm^3
l_e	effective length	35.8	mm
A_e	effective area	19.4	mm^2
A_{min}	minimum area	19.4	mm^2
m	mass of E core	≈ 2.7	g
m	mass of I core	≈ 0.9	g

Ordering information for I cores

GRADE	TYPE NUMBER
3C90	I16/2.4/5-3C90

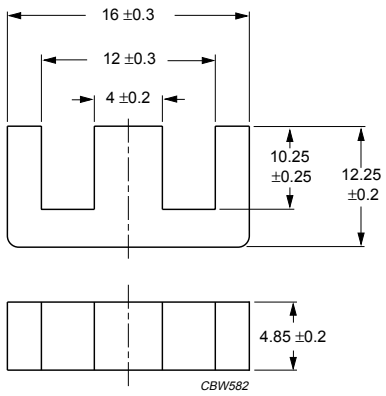

Dimensions in mm.

Fig.1 E16/12/5 core.

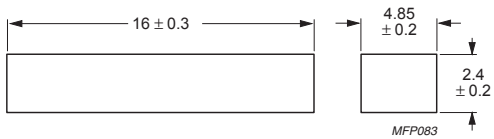

Dimensions in mm.

Fig.2 I16/2.4/5.

Core halves for use in combination with an I core

A_L measured in combination with an I core, clamping force for A_L measurements 20 ± 10 N;

GRADE	A_L (nH)	μ_e	AIR GAP (μm)	TYPE NUMBER
3C90	1000 ± 25 %	≈ 1470	≈ 0	E16/12/5-3C90

Properties of core sets under power conditions

GRADE	B (mT) at	CORE LOSS (W) at	
	H = 250 A/m; f = 25 kHz; T = 100 °C	f = 25 kHz; $\hat{B}$ = 200 mT; T = 100 °C	f = 100 kHz; $\hat{B}$ =100 mT; T = 100 °C
E16/12/5+I16/2.4/5-3C90	≥ 320	≤ 0.08	≤ 0.08

CORES

Effective core parameters of an E / I combination

SYMBOL	PARAMETER	VALUE	UNIT
$\Sigma(l/A)$	core factor (C1)	1.76	mm^{-1}
V_e	effective volume	913	mm^3
l_e	effective length	40.1	mm
A_e	effective area	22.8	mm^2
A_{min}	minimum area	22.0	mm^2
m	mass of E core	≈ 3.8	g
m	mass of I core	≈ 1.1	g

Ordering information for I cores

GRADE	TYPE NUMBER
3C90	I20/2.3/5-3C90

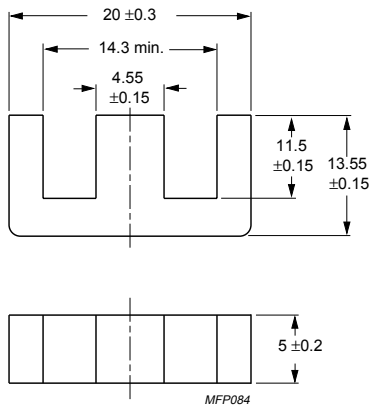

Dimensions in mm.

Fig.1 E20/14/5 core.

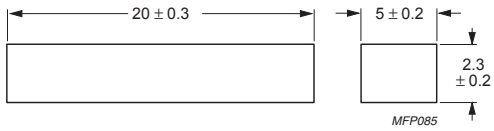

Dimensions in mm.

Fig.2 I20/2.3/5.

Core halves for use in combination with an I core

A_L measured in combination with an I core, clamping force for A_L measurements 20 ± 10 N;

GRADE	A_L (nH)	μ_e	AIR GAP (μm)	TYPE NUMBER
3C90	1290 ± 25 %	≈ 1810	≈ 0	E20/14/5-3C90

Properties of core sets under power conditions

GRADE	B (mT) at	CORE LOSS (W) at	
	H = 250 A/m; f = 25 kHz; T = 100 °C	f = 25 kHz; $\hat{B}$ = 200 mT; T = 100 °C	f = 100 kHz; $\hat{B}$ =100 mT; T = 100 °C
E20/14/5+I20/2.3/5-3C90	≥ 320	≤ 0.11	≤ 0.11

CORES

Effective core parameters of an E / I combination

SYMBOL	PARAMETER	VALUE	UNIT
$\Sigma(l/A)$	core factor (C1)	1.33	mm^{-1}
V_e	effective volume	1450	mm^3
l_e	effective length	44.0	mm
A_e	effective area	33.1	mm^2
A_{min}	minimum area	32.0	mm^2
m	mass of E core	≈ 5.9	g
m	mass of I core	≈ 2.3	g

Ordering information for I cores

GRADE	TYPE NUMBER
3C90	I22/4/6-3C90

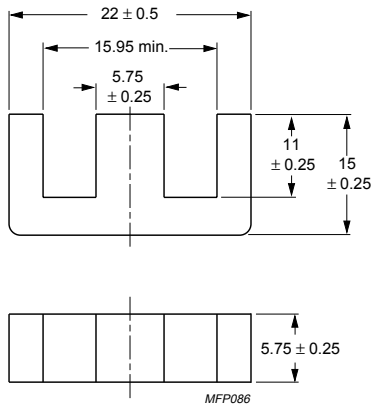

Dimensions in mm.

Fig.1 E22/15/6 core.

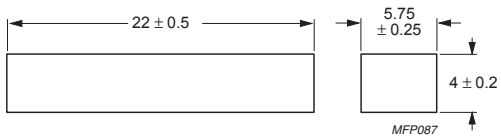

Dimensions in mm.

Fig.2 I22/4/6.

Core halves for use in combination with an I core

A_L measured in combination with an I core, clamping force for A_L measurements 20 ± 10 N;

GRADE	A_L (nH)	μ_e	AIR GAP (μm)	TYPE NUMBER
3C90	1750 ± 25 %	≈ 1850	≈ 0	E22/15/6-3C90

Properties of core sets under power conditions

GRADE	B (mT) at	CORE LOSS (W) at		
	H = 250 A/m; f = 25 kHz; T = 100 °C	f = 25 kHz; $\hat{B}$ = 200 mT; T = 100 °C	f = 100 kHz; $\hat{B}$ =100 mT; T = 100 °C	f = 400 kHz; $\hat{B}$ =50 mT; T = 100 °C
E22/15/6+I22/4/6-3C90	≥ 330	≤ 0.17	≤ 0.17	–

CORES

Effective core parameters of an E / I combination

SYMBOL	PARAMETER	VALUE	UNIT
$\Sigma(l/A)$	core factor (C1)	1.27	mm^{-1}
V_e	effective volume	2070	mm^3
l_e	effective length	51.3	mm
A_e	effective area	40.3	mm^2
A_{min}	minimum area	39.0	mm^2
m	mass of E core	≈ 8.0	g
m	mass of I core	≈ 2.5	g

Ordering information for I cores

GRADE	TYPE NUMBER
3C90	I25/3/6-3C90

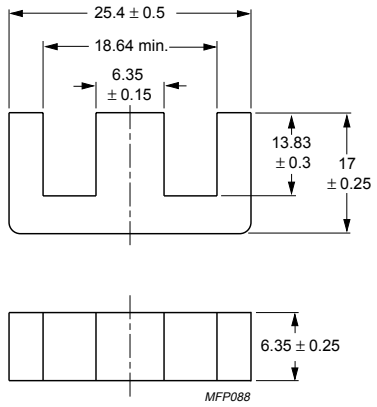

Dimensions in mm.

Fig.1 E25/17/6 core.

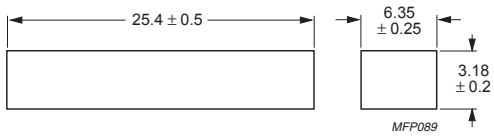

Dimensions in mm.

Fig.2 I25/3/6.

Core halves for use in combination with an I core

A_L measured in combination with an I core, clamping force for A_L measurements 20 ± 10 N;

GRADE	A_L (nH)	μ_e	AIR GAP (μm)	TYPE NUMBER
3C90	1750 ± 25 %	≈ 1770	≈ 0	E25/17/6-3C90

Properties of core sets under power conditions

GRADE	B (mT) at	CORE LOSS (W) at	
	H = 250 A/m; f = 25 kHz; T = 100 °C	f = 25 kHz; $\hat{B}$ = 200 mT; T = 100 °C	f = 100 kHz; $\hat{B}$ =100 mT; T = 100 °C
E25/17/6+I25/3/6-3C90	≥ 330	≤ 0.24	≤ 0.24

CORES

Effective core parameters of an E / I combination

SYMBOL	PARAMETER	VALUE	UNIT
$\Sigma(l/A)$	core factor (C1)	0.588	mm^{-1}
V_e	effective volume	4120	mm^3
l_e	effective length	49.2	mm
A_e	effective area	83.7	mm^2
A_{min}	minimum area	83.7	mm^2
m	mass of E core	≈ 17	g
m	mass of I core	≈ 5.1	g

Ordering information for I cores

GRADE	TYPE NUMBER
3C90	I28/3.5/11-3C90

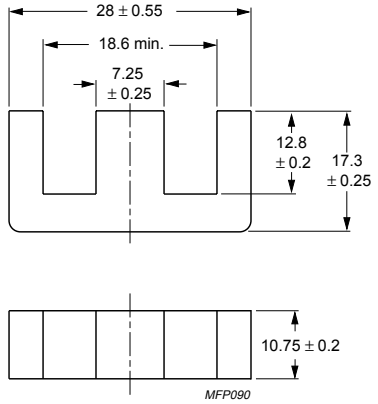

Dimensions in mm.

Fig.1 E28/17/11 core.

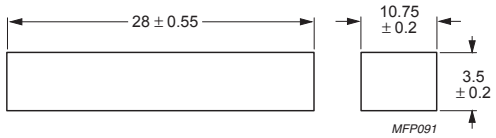

Dimensions in mm.

Fig.2 I28/3.5/11.

Core halves for use in combination with an I core

A_L measured in combination with an I core, clamping force for A_L measurements 40 ± 20 N;

GRADE	A_L (nH)	μ_e	AIR GAP (μm)	TYPE NUMBER
3C90	3625 ± 25 %	≈ 1700	≈ 0	E28/17/11-3C90

Properties of core sets under power conditions

GRADE	B (mT) at	CORE LOSS (W) at		
	H = 250 A/m; f = 25 kHz; T = 100 °C	f = 25 kHz; $\hat{B}$ = 200 mT; T = 100 °C	f = 100 kHz; $\hat{B}$ =100 mT; T = 100 °C	f = 400 kHz; $\hat{B}$ =50 mT; T = 100 °C
E28/17/11+I28/3.5/11-3C90	≥ 330	≤ 0.5	≤ 0.5	–

CORES

Effective core parameters of an E / I combination

SYMBOL	PARAMETER	VALUE	UNIT
$\Sigma(l/A)$	core factor (C1)	0.524	mm^{-1}
V_e	effective volume	6720	mm^3
l_e	effective length	59.2	mm
A_e	effective area	113	mm^2
A_{min}	minimum area	104	mm^2
m	mass of E core	≈ 25	g
m	mass of I core	≈ 8.6	g

Ordering information for I cores

GRADE	TYPE NUMBER
3C90	I30/5.5/11-3C90

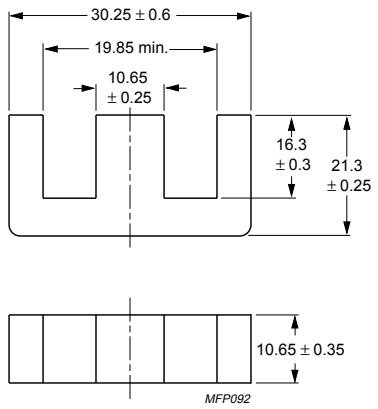

Dimensions in mm.

Fig.1 E30/21/11 core.

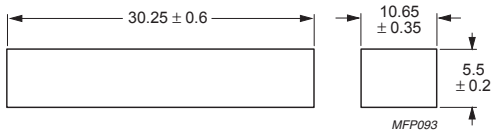

Dimensions in mm.

Fig.2 I30/5.5/11.

Core halves for use in combination with an I core

A_L measured in combination with an I core, clamping force for A_L measurements 40 ± 20 N;

GRADE	A_L (nH)	μ_e	AIR GAP (μm)	TYPE NUMBER
3C90	4300 ± 25 %	≈ 1790	≈ 0	E30/21/11-3C90

Properties of core sets under power conditions

GRADE	B (mT) at	CORE LOSS (W) at	
	H = 250 A/m; f = 25 kHz; T = 100 °C	f = 25 kHz; $\hat{B}$ = 200 mT; T = 100 °C	f = 100 kHz; $\hat{B}$ =100 mT; T = 100 °C
E30/21/11+I30/5.5/11-3C90	≥ 330	≤ 0.8	≤ 0.8

CORES

Effective core parameters of an E / I combination

SYMBOL	PARAMETER	VALUE	UNIT
$\Sigma(l/A)$	core factor (C1)	0.567	mm^{-1}
V_e	effective volume	7910	mm^3
l_e	effective length	66.9	mm
A_e	effective area	118	mm^2
A_{min}	minimum area	114	mm^2
m	mass of E core	≈ 31	g
m	mass of I core	≈ 10	g

Ordering information for I cores

GRADE	TYPE NUMBER
3C90	I33/5/13-3C90

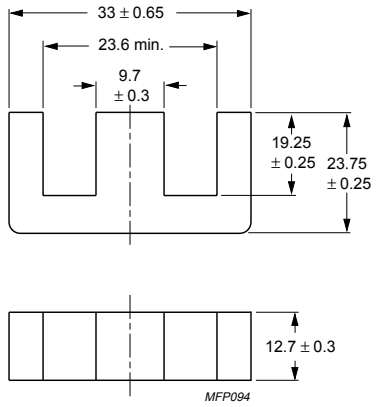

Dimensions in mm.

Fig.1 E33/23/13 core.

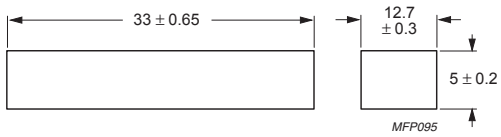

Dimensions in mm.

Fig.2 I33/5/13.

Core halves for use in combination with an I core

A_L measured in combination with an I core, clamping force for A_L measurements 40 ± 20 N;

GRADE	A_L (nH)	μ_e	AIR GAP (μm)	TYPE NUMBER
3C90	4300 ± 25 %	≈ 1940	≈ 0	E33/23/13-3C90

Properties of core sets under power conditions

GRADE	B (mT) at	CORE LOSS (W) at	
	H = 250 A/m; f = 25 kHz; T = 100 °C	f = 25 kHz; $\hat{B}$ = 200 mT; T = 100 °C	f = 100 kHz; $\hat{B}$ =100 mT; T = 100 °C
E33/23/13+I33/5/13-3C90	≥ 330	≤ 0.95	≤ 0.95

CORES

Effective core parameters of an E / I combination

SYMBOL	PARAMETER	VALUE	UNIT
$\Sigma(l/A)$	core factor (C1)	0.786	mm^{-1}
V_e	effective volume	6270	mm^3
l_e	effective length	70.2	mm
A_e	effective area	89.3	mm^2
A_{min}	minimum area	88.0	mm^2
m	mass of E core	≈ 24	g
m	mass of I core	≈ 7.4	g

Ordering information for I cores

GRADE	TYPE NUMBER
3C90	I35/5/10-3C90

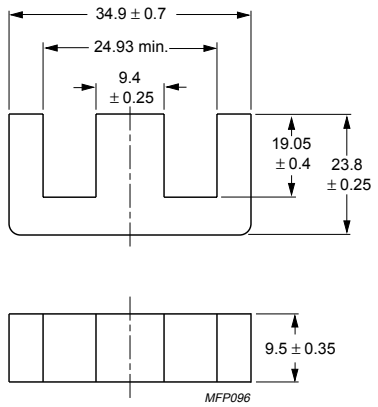

Dimensions in mm.

Fig.1 E35/24/10 core.

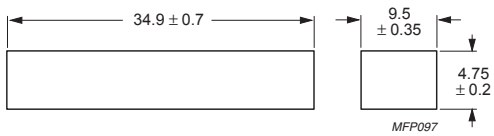

Dimensions in mm.

Fig.2 I35/5/10.

Core halves for use in combination with an I core

A_L measured in combination with an I core, clamping force for A_L measurements 40 ± 20 N;

GRADE	A_L (nH)	μ_e	AIR GAP (μm)	TYPE NUMBER
3C90	2960 ± 25 %	≈ 1850	≈ 0	E35/24/10-3C90

Properties of core sets under power conditions

GRADE	B (mT) at	CORE LOSS (W) at	
	H = 250 A/m; f = 25 kHz; T = 100 °C	f = 25 kHz; $\hat{B}$ = 200 mT; T = 100 °C	f = 100 kHz; $\hat{B}$ =100 mT; T = 100 °C
E35/24/10+I35/5/10-3C90	≥ 330	≤ 0.75	≤ 0.75

CORES

Effective core parameters of an E / I combination

SYMBOL	PARAMETER	VALUE	UNIT
$\Sigma(l/A)$	core factor (C1)	0.542	mm^{-1}
V_e	effective volume	11100	mm^3
l_e	effective length	77.5	mm
A_e	effective area	143	mm^2
A_{min}	minimum area	133	mm^2
m	mass of E core	≈ 42	g
m	mass of I core	≈ 17	g

Ordering information for I cores

GRADE	TYPE NUMBER
3C90	I40/7.5/12-3C90

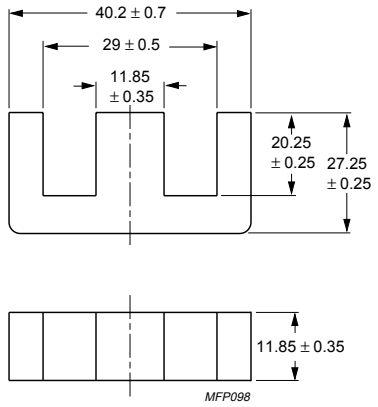

Dimensions in mm.

Fig.1 E40/27/12 core.

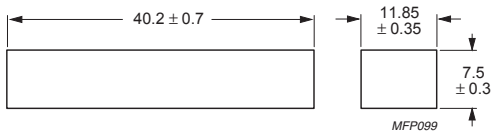

Dimensions in mm.

Fig.2 I40/7.5/12.

Core halves for use in combination with an I core

A_L measured in combination with an I core, clamping force for A_L measurements 40 ± 20 N;

GRADE	A_L (nH)	μ_e	AIR GAP (μm)	TYPE NUMBER
3C90	4110 ± 25 %	≈ 1770	≈ 0	E40/27/12-3C90

Properties of core sets under power conditions

GRADE	B (mT) at	CORE LOSS (W) at	
	H = 250 A/m; f = 25 kHz; T = 100 °C	f = 25 kHz; $\hat{B}$ = 200 mT; T = 100 °C	f = 100 kHz; $\hat{B}$ =100 mT; T = 100 °C
E40/27/12+I40/7.5/12-3C90	≥ 330	≤ 1.3	≤ 1.3

Soft Ferrites

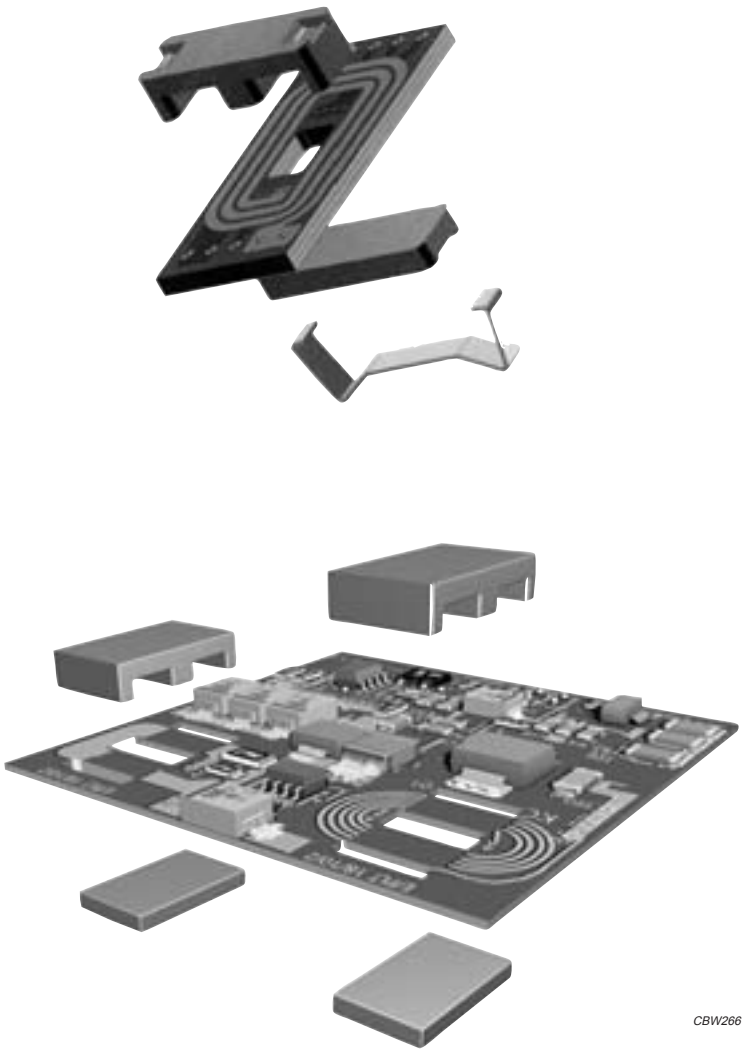
CBW266

PRODUCT OVERVIEW AND TYPE NUMBER STRUCTURE

Product overview Planar E cores

CORE TYPE	V_e (mm^3)	A_e (mm^2)	MASS (g)
E14/3.5/5	300	14.5	0.6
PLT14/5/1.5	240	14.5	0.5
E14/3.5/5/R	–	–	0.6
PLT14/5/1.5/S	230	14.2	0.5
E18/4/10	960	39.5	2.4
PLT18/10/2	800	39.5	1.7
E18/4/10/R	–	–	2.4
PLT18/10/2/S	830	40.8	1.7
E22/6/16	2550	78.5	6.5
PLT22/16/2.5	2040	78.5	4.0
E22/6/16/R	–	–	6.5
PLT22/16/2.5/S	2100	80.4	4.0
E32/6/20	5380	129	13
PLT32/20/3	4560	129	10
E32/6/20/R	–	–	13
PLT32/20/3/R	4560	130	10
E38/8/25	10200	194	25
PLT38/25/3.8	8460	194	18
E43/10/28	13900	225	35
PLT43/28/4	11500	225	24
E58/11/38	24600	305	62
PLT58/38/4	20800	305	44
E64/10/50	40700	511	100
PLT64/50/5	35500	511	78

- In accordance with IEC 62317, part 9.

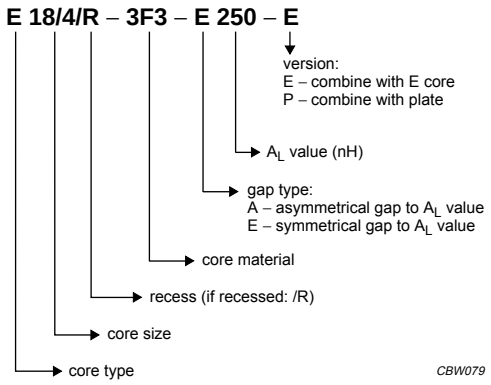

Fig.1 Type number structure for E cores.

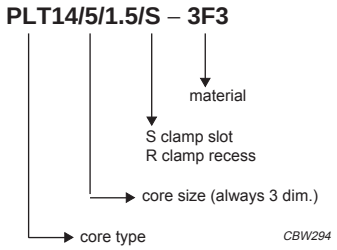

Fig.2 Type number structure for plates.

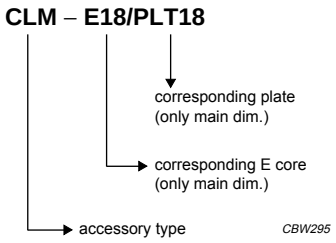

Fig.3 Type number structure for clamps.

CORES

Effective core parameters of a set of E cores

SYMBOL	PARAMETER	VALUE	UNIT
$\Sigma(l/A)$	core factor (C1)	1.43	mm^{-1}
V_e	effective volume	300	mm^3
l_e	effective length	20.7	mm
A_e	effective area	14.3	mm^2
A_{min}	minimum area	14.3	mm^2
m	mass of core half	≈ 0.6	g

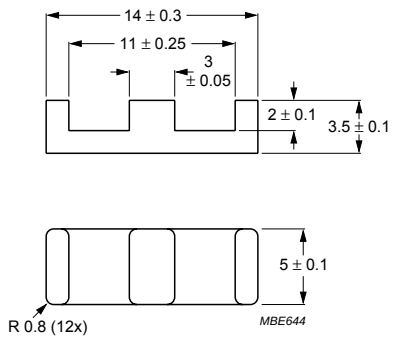

Dimensions in mm.

Fig.1 E14/3.5/5 core.

Effective core parameters of an E/PLT combination

SYMBOL	PARAMETER	VALUE	UNIT
$\Sigma(l/A)$	core factor (C1)	1.16	mm^{-1}
V_e	effective volume	240	mm^3
l_e	effective length	16.7	mm
A_e	effective area	14.5	mm^2
A_{min}	minimum area	14.5	mm^2
m	mass of plate	≈ 0.5	g

Ordering information for plates

GRADE	TYPE NUMBER
3C90	PLT14/5/1.5-3C90
3C92 des	PLT14/5/1.5-3C92
3C93 des	PLT14/5/1.5-3C93
3C94	PLT14/5/1.5-3C94
3C95 des	PLT14/5/1.5-3C95
3C96 des	PLT14/5/1.5-3C96
3F3	PLT14/5/1.5-3F3
3F35 des	PLT14/5/1.5-3F35
3F4 des	PLT14/5/1.5-3F4
3F45 prot	PLT14/5/1.5-3F45
3E6	PLT14/5/1.5-3E6

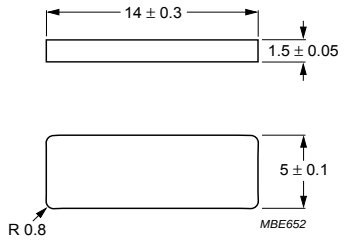

Dimensions in mm.

Fig.2 PLT14/5/1.5.

Core halves for use in combination with an ungapped E core

A_L measured in combination with a non-gapped core half, clamping force for A_L measurements, 10 ±5 N, using a PCB coil containing 4 layers of 8 tracks each, total height 1.6 mm.

GRADE	A_L (nH)	μ_e	AIR GAP (μm)	TYPE NUMBER
3C90	63 ±3%	≈ 72	≈ 530	E14/3.5/5-3C90-A63-E
	100 ±5%	≈ 114	≈ 270	E14/3.5/5-3C90-A100-E
	160 ±8%	≈ 182	≈ 130	E14/3.5/5-3C90-A160-E
	1280 ±25%	≈ 1450	≈ 0	E14/3.5/5-3C90
3C92 des	960 ±25%	≈ 1090	≈ 0	E14/3.5/5-3C92
3C93 des	1100 ±25%	≈ 1250	≈ 0	E14/3.5/5-3C93
3C94	63 ±3%	≈ 72	≈ 530	E14/3.5/5-3C94-A63-E
	100 ±5%	≈ 114	≈ 270	E14/3.5/5-3C94-A100-E
	160 ±8%	≈ 182	≈ 130	E14/3.5/5-3C94-A160-E
	1280 ±25%	≈ 1450	≈ 0	E14/3.5/5-3C94
3C95 des	1500 ±25%	≈ 1730	≈ 0	E14/3.5/5-3C95
3C96 des	1200 ±25%	≈ 1360	≈ 0	E14/3.5/5-3C96
3F3	63 ±3%	≈ 72	≈ 530	E14/3.5/5-3F3-A63-E
	100 ±5%	≈ 114	≈ 270	E14/3.5/5-3F3-A100-E
	160 ±8%	≈ 182	≈ 130	E14/3.5/5-3F3-A160-E
	1100 ±25%	≈ 1250	≈ 0	E14/3.5/5-3F3
3F35 des	900 ±25%	≈ 1020	≈ 0	E14/3.5/5-3F35
3F4 des	63 ±3%	≈ 72	≈ 530	E14/3.5/5-3F4-A63-E
	100 ±5%	≈ 114	≈ 270	E14/3.5/5-3F4-A100-E
	160 ±8%	≈ 182	≈ 130	E14/3.5/5-3F4-A160-E
	650 ±25%	≈ 740	≈ 0	E14/3.5/5-3F4
3F45 prot	650 ±25%	≈ 740	≈ 0	E14/3.5/5-3F45
3E6	5600 +40/–30%	≈ 6360	≈ 0	E14/3.5/5-3E6

Core halves for use in combination with a plate (PLT)

A_L measured in combination with a plate (PLT) clamping force for A_L measurements, 10 ±5 N, using a PCB coil containing 4 layers of 8 tracks each, total height 1.6 mm.

GRADE	A_L (nH)	μ_e	AIR GAP (μm)	TYPE NUMBER
3C90	63 ±3%	≈ 58	≈ 600	E14/3.5/5-3C90-A63-P
	100 ±5%	≈ 92	≈ 300	E14/3.5/5-3C90-A100-P
	160 ±8%	≈ 148	≈ 150	E14/3.5/5-3C90-A160-P
	1500 ±25%	≈ 1400	≈ 0	E14/3.5/5-3C90
3C92 des	1130 ±25%	≈ 1040	≈ 0	E14/3.5/5-3C92
3C93 des	1300 ±25%	≈ 1200	≈ 0	E14/3.5/5-3C93
3C94	63 ±3%	≈ 58	≈ 600	E14/3.5/5-3C94-A63-P
	100 ±5%	≈ 92	≈ 300	E14/3.5/5-3C94-A100-P
	160 ±8%	≈ 148	≈ 150	E14/3.5/5-3C94-A160-P
	1500 ±25%	≈1400	≈ 0	E14/3.5/5-3C94
3C95 des	1740 ±25%	≈ 1600	≈ 0	E14/3.5/5-3C95
3C96 des	1350 ±25%	≈ 1260	≈ 0	E14/3.5/5-3C96
3F3	63 ±3%	≈ 58	≈ 600	E14/3.5/5-3F3-A63-P
	100 ±5%	≈ 92	≈ 300	E14/3.5/5-3F3-A100-P
	160 ±8%	≈ 148	≈ 150	E14/3.5/5-3F3-A160-P
	1300 ±25%	≈ 1200	≈ 0	E14/3.5/5-3F3
3F35 des	1050 ±25%	≈ 980	≈ 0	E14/3.5/5-3F35
3F4 des	63 ±3%	≈ 58	≈ 600	E14/3.5/5-3F4-A63-P
	100 ±5%	≈ 92	≈ 300	E14/3.5/5-3F4-A100-P
	160 ±8%	≈ 148	≈ 150	E14/3.5/5-3F4-A160-P
	780 ±25%	≈ 720	≈ 0	E14/3.5/5-3F4
3F45 prot	780 ±25%	≈ 720	≈ 0	E14/3.5/5-3F45
3E6	6400 +40/−30%	≈ 5900	≈ 0	E14/3.5/5-3E6

Properties of core sets under power conditions

GRADE	B (mT) at	CORE LOSS (W) at				
	H = 250 A/m; f = 10 kHz; T = 100 °C	f = 100 kHz; $\hat{B}$ = 100 mT; T = 100 °C	f = 100 kHz; $\hat{B}$ = 200 mT; T = 25 °C	f = 100 kHz; $\hat{B}$ = 200 mT; T = 100 °C	f = 400 kHz; $\hat{B}$ = 50 mT; T = 100 °C	f = 500 kHz; $\hat{B}$ = 50 mT; T = 100 °C
E+E14-3C90	≥320	≤ 0.030	–	–	–	–
E+PLT14-3C90	≥320	≤ 0.026	–	–	–	–
E+E14-3C92	≥370	≤ 0.024	–	≤ 0.16	–	–
E+PLT14-3C92	≥370	≤ 0.021	–	≤ 0.15	–	–
E+E14-3C93	≥320	≤ 0.024[1]	–	≤ 0.16[1]	–	–
E+PLT14-3C93	≥320	≤ 0.021[1]	–	≤ 0.15[1]	–	–
E+E14-3C94	≥320	≤ 0.024	–	≤ 0.16	–	–
E+PLT14-3C94	≥320	≤ 0.021	–	≤ 0.15	–	–
E+E14-3C95	≥320	–	≤ 0.17	≤ 0.16	–	–
E+PLT14-3C95	≥320	–	≤ 0.13	≤ 0.12	–	–
E+E14-3C96	≥340	≤ 0.019	–	≤ 0.13	≤ 0.05	≤ 0.11
E+PLT14-3C96	≥340	≤ 0.016	–	≤ 0.12	≤ 0.045	≤ 0.09
E+E14-3F3	≥300	≤ 0.033	–	–	≤ 0.06	–
E+PLT14-3F3	≥300	≤ 0.027	–	–	≤ 0.047	–
E+E14-3F35	≥300	–	–	–	≤ 0.03	≤ 0.05
E+PLT14-3F35	≥300	–	–	–	≤ 0.024	≤ 0.035

1. Measured at 140 °C.

Properties of core sets under power conditions (continued)

GRADE	B (mT) at	CORE LOSS (W) at			
	H = 250 A/m; f = 10 kHz; T = 100 °C	f = 500 kHz; $\hat{B}$ = 100 mT; T = 100 °C	f = 1 MHz; $\hat{B}$ = 30 mT; T = 100 °C	f = 1 MHz; $\hat{B}$ = 50 mT; T = 100 °C	f = 3 MHz; $\hat{B}$ = 10 mT; T = 100 °C
E+E14-3F35	≥300	≤ 0.35	–	–	–
E+PLT14-3F35	≥300	≤ 0.27	–	–	–
E+E14-3F4	≥250	–	≤ 0.09	–	≤ 0.15
E+PLT14-3F4	≥250	–	≤ 0.07	–	≤ 0.12
E+E14-3F45	≥250	–	≤ 0.07	≤ 0.26	≤ 0.12
E+PLT14-3F45	≥250	–	≤ 0.055	≤ 0.2	≤ 0.095

MOUNTING INFORMATION

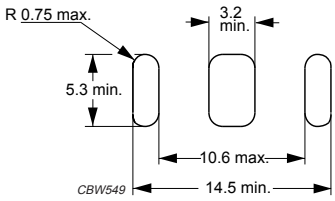

Fig.3 Recommended PCB cut-out for glued planar E14/3.5/5 cores.

BLISTER TAPE AND REEL DIMENSIONS prot

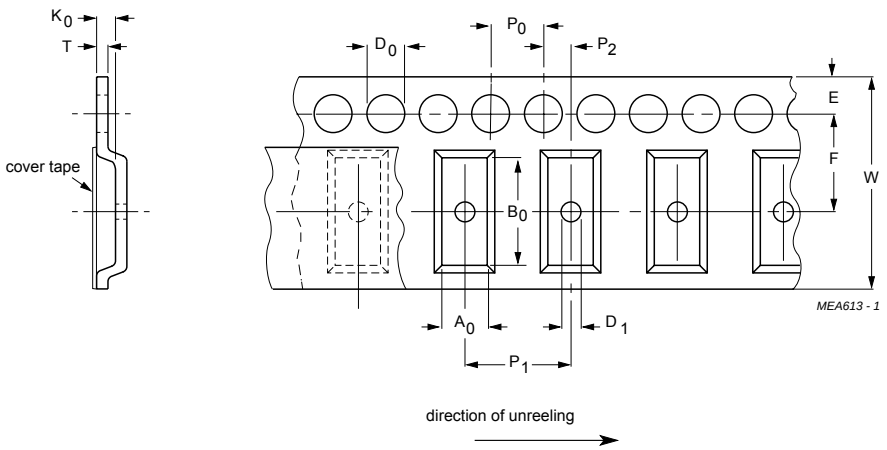

For dimensions see Table 1.

Fig.4 Blister tape.

Table 1 Physical dimensions of blister tape; see Fig.4

SIZE	DIMENSIONS (mm)
A_0	5.4 ±0.2
B_0	14.6 ±0.2
K_0	4.0 ±0.2
T	0.3 ±0.05
W	24.0 ±0.3
E	1.75 ±0.1
F	11.5 ±0.1
D_0	1.5 +0.1
D_1	≥1.5
P_0	4.0 ±0.1
P_1	8.0 ±0.1
P_2	2.0 ±0.1

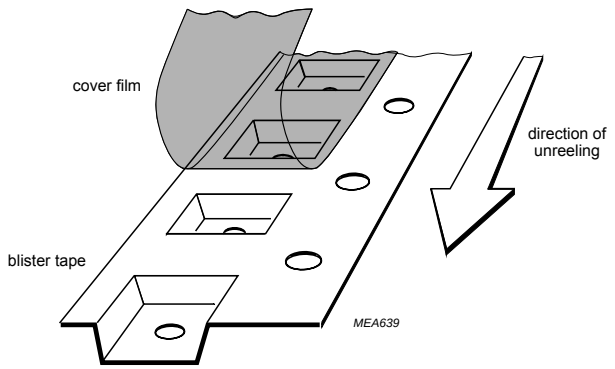

Fig.5 Construction of blister tape.

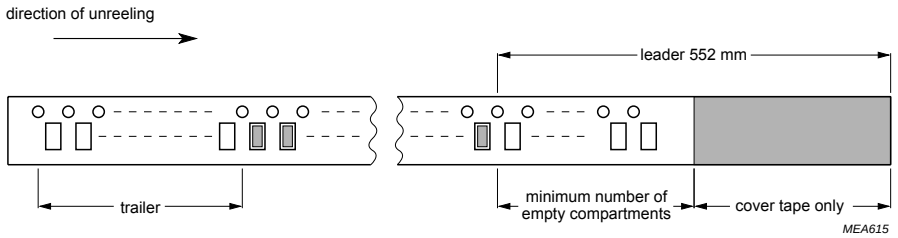

Leader: length of leader tape is 552 mm minimum covered with cover tape.
Trailer: 160 mm minimum (secured with tape).
Storage temperature range for tape: −25 to +45 °C.

Fig.6 Leader/trailer tape.

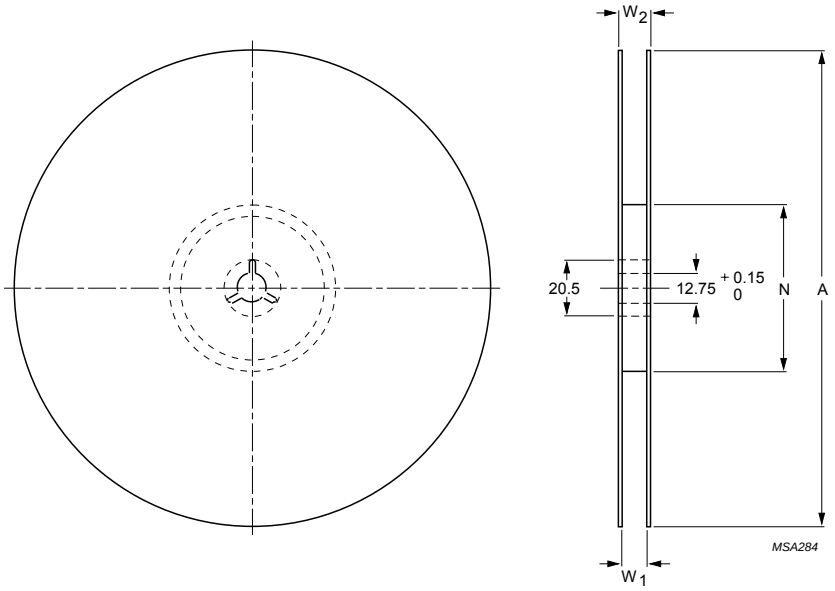

Dimensions in mm.
For dimensions see Table 2.

Fig.7 Reel.

Table 2 Reel dimensions; see Fig.7

SIZE	DIMENSIONS (mm)			
	A	**N**	**W_1**	**W_2**
24	330	100 ±5	24.4	≤28.4

CORES

Effective core parameters of an E/PLT combination

SYMBOL	PARAMETER	VALUE	UNIT
$\Sigma(l/A)$	core factor (C1)	1.15	mm^{-1}
V_e	effective volume	230	mm^3
l_e	effective length	16.4	mm
A_e	effective area	14.2	mm^2
A_{min}	minimum area	10.9	mm^2
m	mass of E core half	≈ 0.6	g
m	mass of plate	≈ 0.5	g

Ordering information for plates

GRADE	TYPE NUMBER
3C90	PLT14/5/1.5/S-3C90
3C92 des	PLT14/5/1.5/S-3C92
3C93 des	PLT14/5/1.5/S-3C93
3C94	PLT14/5/1.5/S-3C94
3C95 des	PLT14/5/1.5/S-3C95
3C96 des	PLT14/5/1.5/S-3C96
3F3	PLT14/5/1.5/S-3F3
3F35 des	PLT14/5/1.5/S-3F35
3F4 des	PLT14/5/1.5/S-3F4
3F45 prot	PLT14/5/1.5/S-3F45
3E6	PLT14/5/1.5/S-3E6

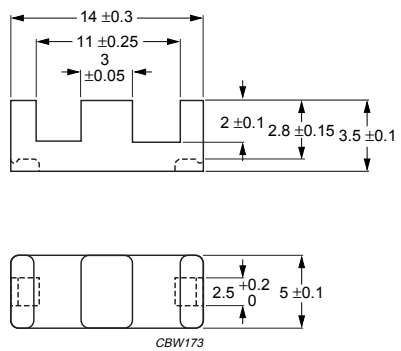

Dimensions in mm.

Fig.1 E14/3.5/5/R core.

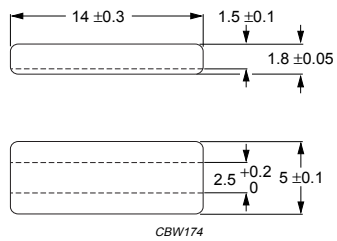

Dimensions in mm.

Fig.2 PLT14/5/1.5/S.

Core halves for use in combination with a slotted plate (PLT/S)

A_L measured in combination with a slotted plate (PLT/S) clamping force for A_L measurements 10 ±5 N; measurement coil as for E14/3.5/5.

GRADE	A_L (nH)	μ_e	AIR GAP (μm)	TYPE NUMBER
3C90	63 ±3%	≈ 58	≈ 600	E14/3.5/5/R-3C90-A63-P
	100 ±5%	≈ 92	≈ 300	E14/3.5/5/R-3C90-A100-P
	160 ±8%	≈ 148	≈ 150	E14/3.5/5/R-3C90-A160-P
	1500 ±25%	≈ 1380	≈ 0	E14/3.5/5/R-3C90
3C92 des	1130 ±25%	≈ 1040	≈ 0	E14/3.5/5/R-3C92
3C93 des	1300 ±25%	≈ 1200	≈ 0	E14/3.5/5/R-3C93
3C94	63 ±3%	≈ 58	≈ 600	E14/3.5/5/R-3C94-A63-P
	100 ±5%	≈ 92	≈ 300	E14/3.5/5/R-3C94-A100-P
	160 ±8%	≈ 148	≈ 150	E14/3.5/5/R-3C94-A160-P
	1500 ±25%	≈ 1380	≈ 0	E14/3.5/5/R-3C94
3C95 des	1740 ±25%	≈ 1600	≈ 0	E14/3.5/5/R-3C95
3C96 des	1350 ±25%	≈ 1240	≈ 0	E14/3.5/5/R-3C96
3F3	63 ±3%	≈ 58	≈ 600	E14/3.5/5/R-3F3-A63-P
	100 ±5%	≈ 92	≈ 300	E14/3.5/5/R-3F3-A100-P
	160 ±8%	≈ 148	≈ 150	E14/3.5/5/R-3F3-A160-P
	1300 ±25%	≈ 1200	≈ 0	E14/3.5/5/R-3F3
3F35 des	1050 ±25%	≈ 970	≈ 0	E14/3.5/5/R-3F35
3F4 des	63 ±3%	≈ 58	≈ 600	E14/3.5/5/R-3F4-A63-P
	100 ±5%	≈ 92	≈ 300	E14/3.5/5/R-3F4-A100-P
	160 ±8%	≈ 148	≈ 150	E14/3.5/5/R-3F4-A160-P
	780 ±25%	≈ 710	≈ 0	E14/3.5/5/R-3F4
3F45 prot	780 ±25%	≈ 710	≈ 0	E14/3.5/5/R-3F45
3E6	6400 +40/–30%	≈ 5900	≈ 0	E14/3.5/5/R-3E6

Properties of core sets under power conditions

GRADE	B (mT) at	CORE LOSS (W) at				
	H = 250 A/m; f = 25 kHz; T = 100 °C	f = 100 kHz; $\hat{B}$ = 100 mT; T = 100 °C	f = 100 kHz; $\hat{B}$ = 200 mT; T = 25 °C	f = 100 kHz; $\hat{B}$ = 200 mT; T = 100 °C	f = 400 kHz; $\hat{B}$ = 50 mT; T = 100 °C	f = 500 kHz; $\hat{B}$ = 50 mT; T = 100 °C
E14/R+PLT14/S-3C90	≥320	≤ 0.026	–	–	–	–
E14/R+PLT14/S-3C92	≥370	≤ 0.021	–	≤ 0.15	–	–
E14/R+PLT14/S-3C93	≥320	≤ 0.021[1]	–	≤ 0.15[1]	–	–
E14/R+PLT14/S-3C94	≥320	≤ 0.021	–	≤ 0.15	–	–
E14/R+PLT14/S-3C95	≥320	–	≤ 0.13	≤ 0.12	–	–
E14/R+PLT14/S-3C96	≥340	≤ 0.016	–	≤ 0.12	≤ 0.045	≤ 0.09
E14/R+PLT14/S-3F3	≥300	≤ 0.027	–	–	≤ 0.047	–
E14/R+PLT14/S-3F35	≥300	–	–	–	≤ 0.024	≤ 0.035
E14/R+PLT14/S-3F4	≥250	–	–	–	–	–
E14/R+PLT14/S-3F45	≥250	–	–	–	–	–

1. Measured at 140 °C.

Properties of core sets under power conditions (continued)

GRADE	B (mT) at	CORE LOSS (W) at			
	H = 250 A/m; f = 25 kHz; T = 100 °C	f = 500 kHz; $\hat{B}$ = 100 mT; T = 100 °C	f = 1 MHz; $\hat{B}$ = 30 mT; T = 100 °C	f = 1 MHz; $\hat{B}$ = 50 mT; T = 100 °C	f = 3 MHz; $\hat{B}$ = 10 mT; T = 100 °C
E14/R+PLT14/S-3C90	≥320	–	–	–	–
E14/R+PLT14/S-3C92	≥370	–	–	–	–
E14/R+PLT14/S-3C93	≥320	–	–	–	–
E14/R+PLT14/S-3C94	≥320	–	–	–	–
E14/R+PLT14/S-3C95	≥320	–	–	–	–
E14/R+PLT14/S-3C96	≥340	–	–	–	–
E14/R+PLT14/S-3F3	≥300	–	–	–	–
E14/R+PLT14/S-3F35	≥300	≤ 0.027	–	–	–
E14/R+PLT14/S-3F4	≥250	–	≤ 0.07	–	≤ 0.11
E14/R+PLT14/S-3F45	≥250	–	≤ 0.055	≤ 0.2	≤ 0.09

MOUNTING PARTS

General data and ordering information

ITEM	MATERIAL	FIGURE	TYPE NUMBER
Clamp	stainless steel (CrNi)	3	CLM-E14/PLT14

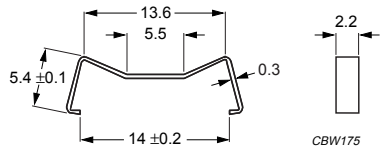

Dimensions in mm.

Fig.3 Clamp for E14/R+PLT14/S.

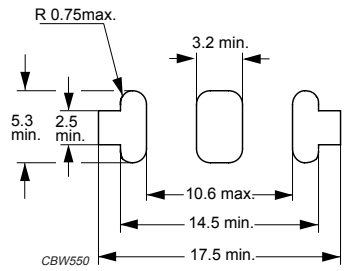

Dimensions in mm.

Fig.4 Recommended PCB cut-out for clamped cores.

BLISTER TAPE AND REEL

For blister tape dimensions and construction and reel dimensions, see data sheet “E14/3.5/5”.

CORES

Effective core parameters of a set of E cores

SYMBOL	PARAMETER	VALUE	UNIT
Σ(l/A)	core factor (C1)	0.616	mm^{-1}
V_e	effective volume	960	mm^3
l_e	effective length	24.3	mm
A_e	effective area	39.3	mm^2
A_{min}	minimum area	39.3	mm^2
m	mass of core half	≈ 2.4	g

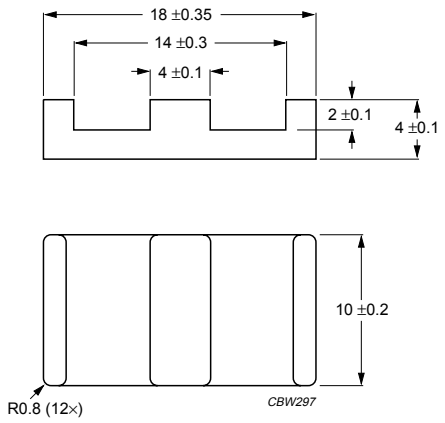

Dimensions in mm.

Fig.1 E18/4/10 core half.

Effective core parameters of an E/PLT combination

SYMBOL	PARAMETER	VALUE	UNIT
Σ(l/A)	core factor (C1)	0.514	mm^{-1}
V_e	effective volume	800	mm^3
l_e	effective length	20.3	mm
A_e	effective area	39.5	mm^2
A_{min}	minimum area	39.5	mm^2
m	mass of plate	≈ 1.7	g

Ordering information for plates

GRADE	TYPE NUMBER
3C90	PLT18/10/2-3C90
3C92 des	PLT18/10/2-3C92
3C93 des	PLT18/10/2-3C93
3C94	PLT18/10/2-3C94
3C95 des	PLT18/10/2-3C95
3C96 des	PLT18/10/2-3C96
3F3	PLT18/10/2-3F3
3F35 des	PLT18/10/2-3F35
3F4 des	PLT18/10/2-3F4
3F45 prot	PLT18/10/2-3F45
3E6	PLT18/10/2-3E6

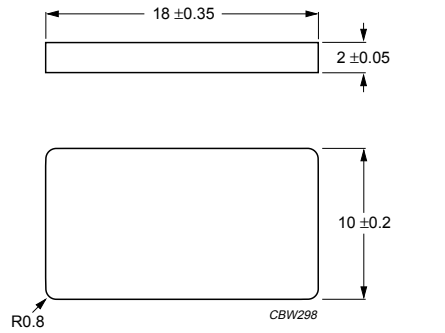

Dimensions in mm.

Fig.2 PLT18/10/2.

Core halves for use in combination with an non-gapped E core

A_L measured in combination with a non-gapped core half, clamping force for A_L measurements, 20 ±10 N, using a PCB coil containing 4 layers of 8 tracks each, total height 1.6 mm.

GRADE	A_L (nH)	μ_e	AIR GAP (μm)	TYPE NUMBER
3C90	100 ±3%	≈ 49	≈ 800	E18/4/10-3C90-A100-E
	160 ±3%	≈ 78	≈ 420	E18/4/10-3C90-A160-E
	250 ±5%	≈ 123	≈ 220	E18/4/10-3C90-A250-E
	315 ±8%	≈ 154	≈ 170	E18/4/10-3C90-A315-E
	3200 ±25%	≈ 1560	≈ 0	E18/4/10-3C90
3C92 des	2330 ±25%	≈ 1140	≈ 0	E18/4/10-3C92
3C93 des	2700 ±25%	≈ 1320	≈ 0	E18/4/10-3C93
3C94	100 ±3%	≈ 49	≈ 800	E18/4/10-3C94-A100-E
	160 ±3%	≈ 78	≈ 420	E18/4/10-3C94-A160-E
	250 ±5%	≈ 123	≈ 220	E18/4/10-3C94-A250-E
	315 ±8%	≈ 154	≈ 170	E18/4/10-3C94-A315-E
	3200 ±25%	≈ 1560	≈ 0	E18/4/10-3C94
3C95 des	3800 ±25%	≈ 1870	≈ 0	E18/4/10-3C95
3C96 des	2900 ±25%	≈ 1410	≈ 0	E18/4/10-3C96
3F3	100 ±3%	≈ 49	≈ 800	E18/4/10-3F3-A100-E
	160 ±3%	≈ 78	≈ 420	E18/4/10-3F3-A160-E
	250 ±5%	≈ 123	≈ 220	E18/4/10-3F3-A250-E
	315 ±8%	≈ 154	≈ 170	E18/4/10-3F3-A315-E
	2700 ±25%	≈ 1320	≈ 0	E18/4/10-3F3
3F35 des	2200 ±25%	≈ 1070	≈ 0	E18/4/10-3F35
3F4 des	100 ±3%	≈ 49	≈ 800	E18/4/10-3F4-A100-E
	160 ±3%	≈ 78	≈ 420	E18/4/10-3F4-A160-E
	250 ±5%	≈ 123	≈ 220	E18/4/10-3F4-A250-E
	315 ±8%	≈ 154	≈ 170	E18/4/10-3F4-A315-E
	1550 ±25%	≈ 760	≈ 0	E18/4/10-3F4
3F45 prot	1550 ±25%	≈ 760	≈ 0	E18/4/10-3F45
3E6	13500 +40/-30%	≈ 6600	≈ 0	E18/4/10-3E6

Core halves for use in combination with a plate (PLT)

A_L measured in combination with a plate (PLT), clamping force for A_L measurements, 20 ±10 N, using a PCB coil containing 4 layers of 8 tracks each, total height 1.6 mm.

GRADE	A_L() (nH)	μ_e	AIR GAP (μm)	TYPE NUMBER
3C90	100 ±3%	≈ 41	≈ 870	E18/4/10-3C90-A100-P
	160 ±3%	≈ 65	≈ 470	E18/4/10-3C90-A160-P
	250 ±5%	≈ 102	≈ 240	E18/4/10-3C90-A250-P
	315 ±8%	≈ 129	≈ 170	E18/4/10-3C90-A315-P
	3680 ±25%	≈ 1500	≈ 0	E18/4/10-3C90
3C92 des	2690 ±25%	≈ 1100	≈ 0	E18/4/10-3C92
3C93 des	3100 ±25%	≈ 1270	≈ 0	E18/4/10-3C93
3C94	100 ±3%	≈41	≈870	E18/4/10-3C94-A100-P
	160 ±3%	≈65	≈470	E18/4/10-3C94-A160-P
	250 ±5%	≈102	≈240	E18/4/10-3C94-A250-P
	315 ±8%	≈129	≈170	E18/4/10-C94-A315-P
	3680 ±25%	≈ 1500	≈ 0	E18/4/10-3C94
3C95 des	4340 ±25%	≈ 1780	≈ 0	E18/4/10-3C95
3C96 des	3250 ±25%	≈ 1320	≈ 0	E18/4/10-3C96
3F3	100 ±3%	≈41	≈870	E18/4/10-3F3-A100-P
	160 ±3%	≈65	≈470	E18/4/10-3F3-A160-P
	250 ±5%	≈102	≈240	E18/4/10-3F3-A250-P
	315 ±8%	≈129	≈170	E18/4/10-3F3-A315-P
	3100 ±25%	≈ 1270	≈ 0	E18/4/10-3F3
3F35 des	2500 ±25%	≈ 1020	≈ 0	E18/4/10-3F35
3F4 des	100 ±3%	≈41	≈870	E18/4/10-3F4-A100-P
	160 ±3%	≈65	≈470	E18/4/10-3F4-A160-P
	250 ±5%	≈102	≈240	E18/4/10-3F4-A250-P
	315 ±8%	≈129	≈170	E18/4/10-3F4-A315-P
	1800 ±25%	≈ 740	≈ 0	E18/4/10-3F4
3F45 prot	1800 ±25%	≈ 740	≈ 0	E18/4/10-3F45
3E6	15500 +40/-30%	≈ 6400	≈ 0	E18/4/10-3E6

Properties of core sets under power conditions

GRADE	B (mT) at	CORE LOSS (W) at				
	H = 250 A/m; f = 10 kHz; T = 100 °C	f = 100 kHz; $\hat{B}$ = 100 mT; T = 100 °C	f = 100 kHz; $\hat{B}$ = 200 mT; T = 25 °C	f = 100 kHz; $\hat{B}$ = 200 mT; T = 100 °C	f = 400 kHz; $\hat{B}$ = 50 mT; T = 100 °C	f = 500 kHz; $\hat{B}$ = 50 mT; T = 100 °C
E+E18-3C90	≥320	≤ 0.105	–	–	–	–
E+PLT18-3C90	≥320	≤ 0.095	–	–	–	–
E+E18-3C92	≥370	≤ 0.085	–	≤ 0.6	–	–
E+PLT18-3C92	≥370	≤ 0.075	–	≤ 0.5	–	–
E+E18-3C93	≥320	≤ 0.085[1]	–	≤ 0.6[1]	–	–
E+PLT18-3C93	≥320	≤ 0.075[1]	–	≤ 0.5[1]	–	–
E+E18-3C94	≥320	≤ 0.085	–	≤ 0.6	–	–
E+PLT18-3C94	≥320	≤ 0.075	–	≤ 0.5	–	–
E+E18-3C95	≥320	–	≤ 0.53	≤ 0.5	–	–
E+PLT18-3C95	≥320	–	≤ 0.44	≤ 0.42	–	–
E+E18-3C96	≥320	≤ 0.065	–	≤ 0.45	≤ 0.18	≤ 0.35
E+PLT18-3C96	≥320	≤ 0.06	–	≤ 0.4	≤ 0.15	≤ 0.3
E+E18-3F3	≥300	≤ 0.11	–	–	≤ 0.19	–
E+PLT18-3F3	≥300	≤ 0.09	–	–	≤ 0.16	–
E+E18-3F35	≥300	–	–	–	≤ 0.09	≤ 0.13
E+PLT18-3F35	≥300	–	–	–	≤ 0.08	≤ 0.12

1. Measured at 140 °C.

Properties of core sets under power conditions (continued)

GRADE	B (mT) at	CORE LOSS (W) at			
	H = 250 A/m; f = 10 kHz; T = 100 °C	f = 500 kHz; $\hat{B}$ = 100 mT; T = 100 °C	f = 1 MHz; $\hat{B}$ = 30 mT; T = 100 °C	f = 1 MHz; $\hat{B}$ = 50 mT; T = 100 °C	f = 3 MHz; $\hat{B}$ = 10 mT; T = 100 °C
E+E18-3F35	≥300	≤ 1.0	–	–	–
E+PLT18-3F35	≥300	≤ 0.9	–	–	–
E+E18-3F4	≥250	–	≤ 0.3	–	≤ 0.45
E+PLT18-3F4	≥250	–	≤ 0.24	–	≤ 0.39
E+E18-3F45	≥250	–	≤ 0.22	≤ 0.82	≤ 0.38
E+PLT18-3F45	≥250	–	≤ 0.18	≤ 0.67	≤ 0.32

MOUNTING INFORMATION

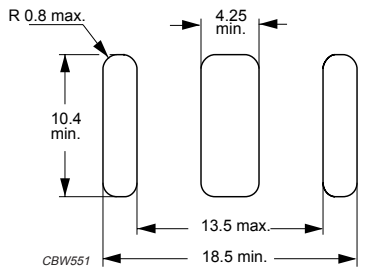

Fig.3 Recommended PCB cut-out for glued planar E18/4/10 cores.

BLISTER TAPE AND REEL DIMENSIONS prot

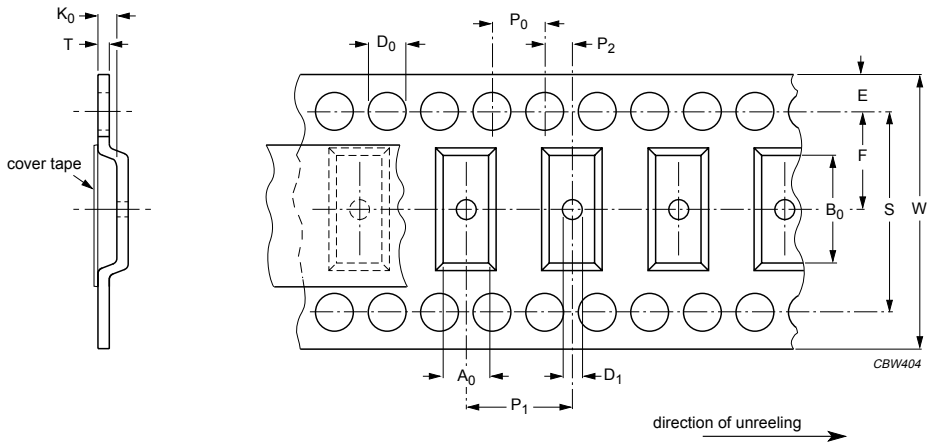

For dimensions see Table 1.

Fig.4 Blister tape.

Table 1 Physical dimensions of blister tape; see Fig.4

SIZE	DIMENSIONS (mm)
A_0	10.5 ±0.2
B_0	18.7 ±0.2
K_0	4.5 ±0.2
T	0.3 ±0.05
W	32.0 ±0.3
E	1.75 ±0.1
F	14.2 ±0.1
D_0	1.5 +0.1
D_1	≥ 2.0
P_0	4.0 ±0.1
P_1	16.0 ±0.1
P_2	2.0 ±0.1
S	28.4 ±0.1

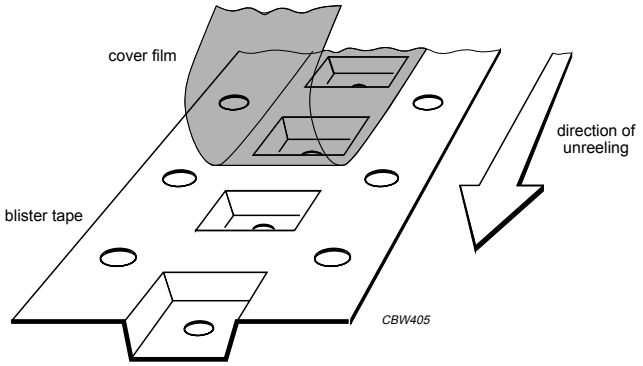

Fig.5 Construction of blister tape.

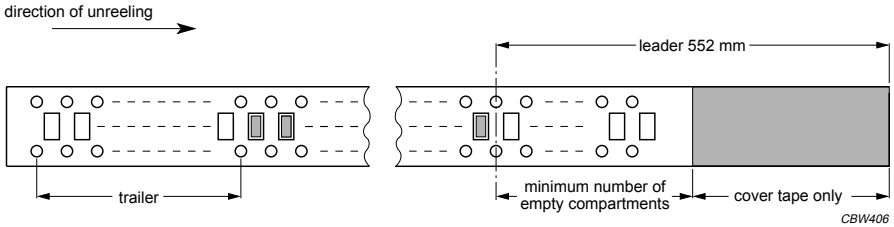

Leader: length of leader tape is 552 mm minimum covered with cover tape.
Trailer: 160 mm minimum (secured with tape).
Storage temperature range for tape: −25 to +45 °C.

Fig.6 Leader/trailer tape.

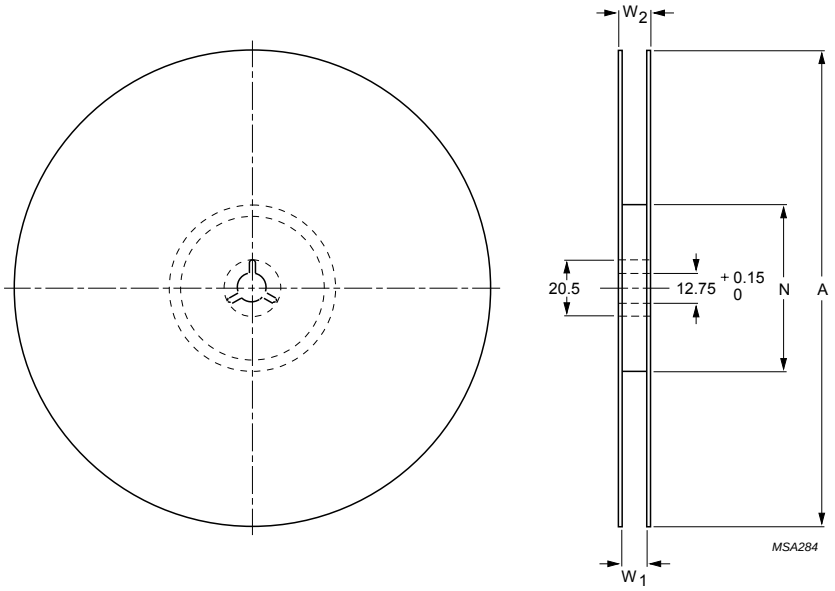

Dimensions in mm.
For dimensions see Table 2.

Fig.7 Reel.

Table 2 Reel dimensions; see Fig.7

SIZE	DIMENSIONS (mm)			
	A	**N**	**W_1**	**W_2**
32	330	100 ±5	32.4	≤36.4

CORES

Effective core parameters of an E/PLT combination

SYMBOL	PARAMETER	VALUE	UNIT
$\Sigma(l/A)$	core factor (C1)	0.498	mm^{-1}
V_e	effective volume	830	mm^3
l_e	effective length	20.3	mm
A_e	effective area	39.5	mm^2
A_{min}	minimum area	35.9	mm^2
m	mass of E core half	≈ 2.4	g
m	mass of plate	≈ 1.7	g

Ordering information for plates

GRADE	TYPE NUMBER
3C90	PLT18/10/2/S-3C90
3C92 des	PLT18/10/2/S-3C92
3C93 des	PLT18/10/2/S-3C93
3C94	PLT18/10/2/S-3C94
3C95 des	PLT18/10/2/S-3C95
3C96 des	PLT18/10/2/S-3C96
3F3	PLT18/10/2/S-3F3
3F35 des	PLT18/10/2/S-3F35
3F4 des	PLT18/10/2/S-3F4
3F45 prot	PLT18/10/2/S-3F45
3E6	PLT18/10/2/S-3E6

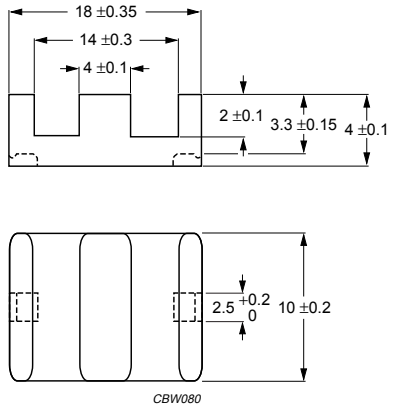

Dimensions in mm.

Fig.1 E18/4/10/R core half.

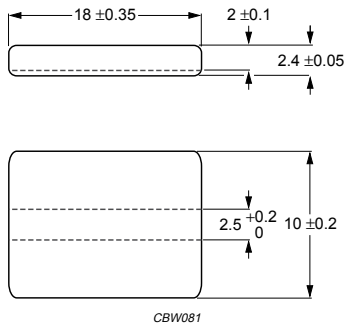

Dimensions in mm.

Fig.2 PLT 18/10/2.

Core halves for use in combination with a slotted plate (PLT/S)

A_L measured in combination with a slotted plate (PLT/S) clamping force for A_L measurements, 20 ±10 N; measurement coil as for E18/4/10.

GRADE	A_L (nH)	μ_e	AIR GAP (μm)	TYPE NUMBER
3C90	100 ±3%	≈ 41	≈ 870	E18/4/10/R-3C90-A100-P
	160 ±3%	≈ 65	≈ 470	E18/4/10/R-3C90-A160-P
	250 ±5%	≈ 102	≈ 240	E18/4/10/R-3C90-A250-P
	315 ±8%	≈ 129	≈ 170	E18/4/10/R-3C90-A315-P
	3680 ±25%	≈ 1500	≈ 0	E18/4/10/R-3C90
3C92 des	2690 ±25%	≈ 1070	≈ 0	E18/4/10/R-3C92
3C93 des	3100 ±25%	≈ 1230	≈ 0	E18/4/10/R-3C93
3C94	100 ±3%	≈ 41	≈ 870	E18/4/10/R-3C94-A100-P
	160 ±3%	≈ 65	≈ 470	E18/4/10/R-3C94-A160-P
	250 ±5%	≈ 102	≈ 240	E18/4/10/R-3C94-A250-P
	315 ±8%	≈ 129	≈ 170	E18/4/10/R-3C94-A315-P
	3680 ±25%	≈ 1500	≈ 0	E18/4/10/R-3C94
3C95 des	4340 ±25%	≈ 1780	≈ 0	E18/4/10/R-3C95
3C96 des	3250 ±25%	≈ 1320	≈ 0	E18/4/10/R-3C96
3F3	100 ±3%	≈ 41	≈ 870	E18/4/10/R-3F3-A100-P
	160 ±3%	≈ 65	≈ 470	E18/4/10/R-3F3-A160-P
	250 ±5%	≈ 102	≈ 240	E18/4/10/R-3F3-A250-P
	315 ±8%	≈ 129	≈ 170	E18/4/10/R-3F3-A315-P
	3100 ±25%	≈ 1270	≈ 0	E18/4/10/R-3F3
3F35 des	2500 ±25%	≈ 1020	≈ 0	E18/4/10/R-3F35
3F4 des	100 ±3%	≈ 41	≈ 870	E18/4/10/R-3F4-A100-P
	160 ±3%	≈ 65	≈ 470	E18/4/10/R-3F4-A160-P
	250 ±5%	≈ 102	≈ 240	E18/4/10/R-3F4-A250-P
	315 ±8%	≈ 129	≈ 170	E18/4/10/R-3F4-A315-P
	1800 ±25%	≈ 740	≈ 0	E18/4/10/R-3F4
3F45 prot	1800 ±25%	≈ 740	≈ 0	E18/4/10/R-3F45
3E6	15500 +40/–30%	≈ 6400	≈ 0	E18/4/10/R-3E6

Properties of core sets under power conditions

GRADE	B (mT) at	CORE LOSS (W) at				
	H = 250 A/m; f = 10 kHz; T = 100 °C	f = 100 kHz; $\hat{B}$ = 100 mT; T = 100 °C	f = 100 kHz; $\hat{B}$ = 200 mT; T = 25 °C	f = 100 kHz; $\hat{B}$ = 200 mT; T = 100 °C	f = 400 kHz; $\hat{B}$ = 50 mT; T = 100 °C	f = 500 kHz; $\hat{B}$ = 50 mT; T = 100 °C
E18/R+PLT18/S-3C90	≥320	≤ 0.095	–	–	–	–
E18/R+PLT18/S-3C92	≥370	≤ 0.075	–	≤ 0.5	–	–
E18/R+PLT18/S-3C93	≥320	≤ 0.075[1]	–	≤ 0.5[1]	–	–
E18/R+PLT18/S-3C94	≥320	≤ 0.075	–	≤ 0.5	–	–
E18/R+PLT18/S-3C95	≥320	–	≤ 0.46	≤ 0.43	–	–
E18/R+PLT18/S-3C96	≥320	≤ 0.06	–	≤ 0.4	≤ 0.15	≤ 0.3
E18/R+PLT18/S-3F3	≥300	≤ 0.09	–	–	≤ 0.16	–
E18/R+PLT18/S-3F35	≥300	–	–	–	≤ 0.08	≤ 0.12
E18/R+PLT18/S-3F4	≥250	–	–	–	–	–
E18/R+PLT18/S-3F45	≥250	–	–	–	–	–

1. Measured at 140 °C.

Properties of core sets under power conditions (continued)

GRADE	B (mT) at				
	H = 250 A/m; f = 10 kHz; T = 100 °C	f = 500 kHz; $\hat{B}$ = 100 mT; T = 100 °C	f = 1 MHz; $\hat{B}$ = 30 mT; T = 100 °C	f = 1 MHz; $\hat{B}$ = 50 mT; T = 100 °C	f = 3 MHz; $\hat{B}$ = 10 mT; T = 100 °C
E18/R+PLT18/S-3C90	≥320	–	–	–	–
E18/R+PLT18/S-3C92	≥370	–	–	–	–
E18/R+PLT18/S-3C93	≥320	–	–	–	–
E18/R+PLT18/S-3C94	≥320	–	–	–	–
E18/R+PLT18/S-3C95	≥320	–	–	–	–
E18/R+PLT18/S-3C96	≥320	–	–	–	–
E18/R+PLT18/S-3F3	≥300	–	–	–	–
E18/R+PLT18/S-3F35	≥300	≤ 0.9	–	–	–
E18/R+PLT18/S-3F4	≥250	–	≤ 0.24	–	≤ 0.39
E18/R+PLT18/S-3F45	≥250	–	≤ 0.18	≤ 0.67	≤ 0.32

MOUNTING PARTS

General data and ordering information

ITEM	MATERIAL	FIGURE	TYPE NUMBER
Clamp	stainless steel (CrNi)	3	CLM-E18/PLT18

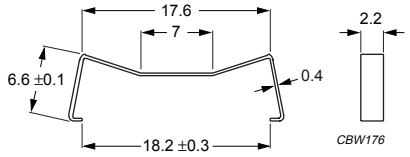

Dimensions in mm.

Fig.3 Clamp for E18/R+PLT18/S.

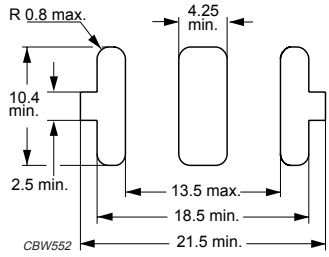

Fig.4 Recommended PCB cut-out for clamped cores.

BLISTER TAPE AND REEL

For blister tape dimensions and construction and reel dimensions, see data sheet “E18/4/10”.

CORES

Effective core parameters of a set of E cores

SYMBOL	PARAMETER	VALUE	UNIT
Σ(l/A)	core factor (C1)	0.414	mm^{-1}
V_e	effective volume	2550	mm^3
l_e	effective length	32.5	mm
A_e	effective area	78.3	mm^2
A_{min}	minimum area	78.3	mm^2
m	mass of core half	≈ 6.5	g

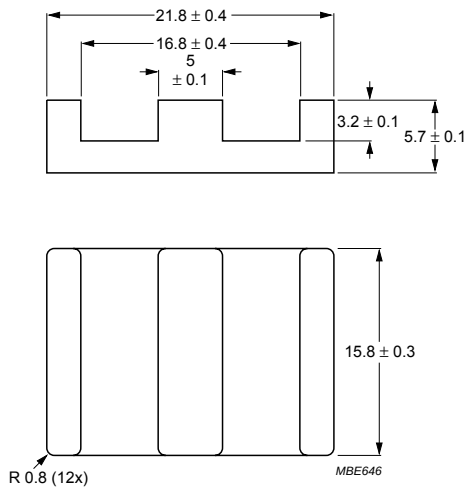

Dimensions in mm.

Fig.1 E22/6/16.

Effective core parameters of an E/PLT combination

SYMBOL	PARAMETER	VALUE	UNIT
Σ(l/A)	core factor (C1)	0.332	mm^{-1}
V_e	effective volume	2040	mm^3
l_e	effective length	26.1	mm
A_e	effective area	78.5	mm^2
A_{min}	minimum area	78.5	mm^2
m	mass of plate	≈ 4	g

Ordering information for plates

GRADE	TYPE NUMBER
3C90	PLT22/16/2.5-3C90
3C92 des	PLT22/16/2.5-3C92
3C93 des	PLT22/16/2.5-3C93
3C94	PLT22/16/2.5-3C94
3C95 des	PLT22/16/2.5-3C95
3C96 des	PLT22/16/2.5-3C96
3F3	PLT22/16/2.5-3F3
3F35 des	PLT22/16/2.5-3F35
3F4 des	PLT22/16/2.5-3F4
3F45 prot	PLT22/16/2.5-3F45
3E6	PLT22/16/2.5-3E6

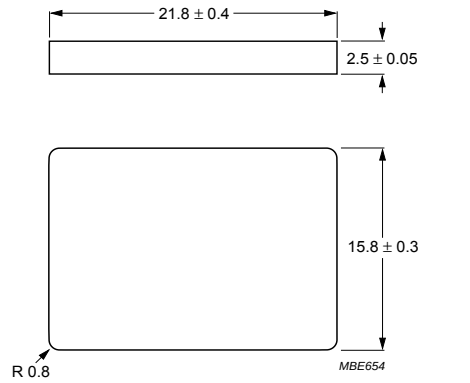

Dimensions in mm.

Fig.2 PLT22/16/2.5.

Core halves for use in combination with an non-gapped E core

A_L measured in combination with a non-gapped core half, clamping force for A_L measurements, 20 ±10 N, using a PCB coil containing 5 layers of 20 tracks each, total height 2.5 mm.

GRADE	A_L (nH)	μ_e	AIR GAP (μm)	TYPE NUMBER
3C90	160 ±3%	≈ 53	≈ 900	E22/6/16-3C90-A160-E
	250 ±3%	≈ 82	≈ 490	E22/6/16-3C90-A250-E
	315 ±3%	≈ 104	≈ 360	E22/6/16-3C90-A315-E
	400 ±5%	≈ 132	≈ 280	E22/6/16-3C90-A400-E
	630 ±8%	≈ 208	≈ 160	E22/6/16-3C90-A630-E
	5150 ±25%	≈ 1700	≈ 0	E22/6/16-3C90
3C92 des	3700 ±25%	≈ 1220	≈ 0	E22/6/16-3C92
3C93 des	4300 ±25%	≈ 1420	≈ 0	E22/6/16-3C93
3C94	160 ±3%	≈ 53	≈ 900	E22/6/16-3C94-A160-E
	250 ±3%	≈ 82	≈ 490	E22/6/16-3C94-A250-E
	315 ±3%	≈ 104	≈ 360	E22/6/16-3C94-A315-E
	400 ±5%	≈ 132	≈ 280	E22/6/16-3C94-A400-E
	630 ±8%	≈ 208	≈ 160	E22/6/16-3C94-A630-E
	5150 ±25%	≈ 1700	≈ 0	E22/6/16-3C94
3C95 des	6220 ±25%	≈ 2050	≈ 0	E22/6/16-3C95
3C96 des	4600 ±25%	≈ 1520	≈ 0	E22/6/16-3C96
3F3	160 ±3%	≈ 53	≈ 900	E22/6/16-3F3-A160-E
	250 ±3%	≈ 82	≈ 490	E22/6/16-3F3-A250-E
	315 ±3%	≈ 104	≈ 360	E22/6/16-3F3-A315-E
	400 ±5%	≈ 132	≈ 280	E22/6/16-3F3-A400-E
	630 ±8%	≈ 208	≈ 160	E22/6/16-3F3-A630-E
	4300 ±25%	≈ 1420	≈ 0	E22/6/16-3F3
3F35 des	3500 ±25%	≈ 1160	≈ 0	E22/6/16-3F35
3F4 des	160 ±3%	≈ 53	≈ 900	E22/6/16-3F4-A160-E
	250 ±3%	≈ 82	≈ 490	E22/6/16-3F4-A250-E
	315 ±3%	≈ 104	≈ 360	E22/6/16-3F4-A315-E
	400 ±5%	≈ 132	≈ 280	E22/6/16-3F4-A400-E
	630 ±8%	≈ 208	≈ 160	E22/6/16-3F4-A630-E
	2400 ±25%	≈ 790	≈ 0	E22/6/16-3F4
3F45 prot	2400 ±25%	≈ 790	≈ 0	E22/6/16-3F45
3E6	22000 +40/–30%	≈ 7250	≈ 0	E22/6/16-3E6

Core halves for use in combination with a plate (PLT)

A_L measured in combination with a plate (PLT), clamping force for A_L measurements, 20 ±10 N, using a PCB coil containing 5 layers of 20 tracks each, total height 2.5 mm.

GRADE	A_L (nH)	μ_e	AIR GAP (μm)	TYPE NUMBER
3C90	160 ±3%	≈ 42	≈ 950	E22/6/16-A160-P
	250 ±3%	≈ 66	≈ 550	E22/6/16-3C90-A250-P
	315 ±3%	≈ 83	≈ 400	E22/6/16-3C90-A315-P
	400 ±5%	≈ 106	≈ 280	E22/6/16-3C90-A400-P
	630 ±8%	≈ 166	≈ 160	E22/6/16-3C90-A630-P
	6150 ±25%	≈ 1620	≈ 0	E22/6/16-3C90
3C92 des	4410 ±25%	≈ 1170	≈ 0	E22/6/16-3C92
3C93 des	5000 ±25%	≈ 1320	≈ 0	E22/6/16-3C93
3C94	160 ±3%	≈ 42	≈ 950	E22/6/16-3C94-A160-P
	250 ±3%	≈ 66	≈ 550	E22/6/16-3C94-A250-P
	315 ±3%	≈ 83	≈ 400	E22/6/16-3C94-A315-P
	400 ±5%	≈ 106	≈ 280	E22/6/16-3C94-A400-P
	630 ±8%	≈ 166	≈ 160	E22/6/16-3C94-A630-P
	6150 ±25%	≈ 1620	≈ 0	E22/6/16-3C94
3C95 des	7360 ±25%	≈ 1950	≈ 0	E22/6/16-3C95
3C96 des	5450 ±25%	≈ 1440	≈ 0	E22/6/16-3C96
3F3	160 ±3%	≈ 42	≈ 950	E22/6/16-3F3-A160-P
	250 ±3%	≈ 66	≈ 550	E22/6/16-3F3-A250-P
	315 ±3%	≈ 83	≈ 400	E22/6/16-3F3-A315-P
	400 ±5%	≈ 106	≈ 280	E22/6/16-3F3-A400-P
	630 ±8%	≈ 166	≈ 160	E22/6/16-3F3-A630-P
	5000 ±25%	≈ 1320	≈ 0	E22/6/16-3F3
3F35 des	4100 ±25%	≈ 1080	≈ 0	E22/6/16-3F35
3F4 des	160 ±3%	≈ 42	≈ 950	E22/6/16-3F4-A160-P
	250 ±3%	≈ 66	≈ 550	E22/6/16-3F4-A250-P
	315 ±3%	≈ 83	≈ 400	E22/6/16-3F4-A315-P
	400 ±5%	≈ 106	≈ 280	E22/6/16-3F4-A400-P
	630 ±8%	≈ 166	≈ 160	E22/6/16-3F4-A630-P
	2900 ±25%	≈ 770	≈ 0	E22/6/16-3F4
3F45 prot	2900 ±25%	≈ 770	≈ 0	E22/6/16-3F45
3E6	26000 +40/–30%	≈ 6900	≈ 0	E22/6/16-3E6

Properties of core sets under power conditions

GRADE	B (mT) at	CORE LOSS (W) at				
	H = 250 A/m; f = 10 kHz; T = 100 °C	f = 100 kHz; $\hat{B}$ = 100 mT; T = 100 °C	f = 100 kHz; $\hat{B}$ = 200 mT; T = 25 °C	f = 100 kHz; $\hat{B}$ = 200 mT; T = 100 °C	f = 400 kHz; $\hat{B}$ = 50 mT; T = 100 °C	f = 500 kHz; $\hat{B}$ = 50 mT; T = 100 °C
E+E22-3C90	≥320	≤ 0.28	–	–	–	–
E+PLT22-3C90	≥320	≤ 0.23	–	–	–	–
E+E22-3C92	≥370	≤ 0.22	–	≤ 1.5	–	–
E+PLT22-3C92	≥370	≤ 0.18	–	≤ 1.25	–	–
E+E22-3C93	≥320	≤ 0.22[1]	–	≤ 1.5[1]	–	–
E+PLT22-3C93	≥320	≤ 0.18[1]	–	≤ 1.25[1]	–	–
E+E22-3C94	≥320	≤ 0.22	–	≤ 1.5	–	–
E+PLT22-3C94	≥320	≤ 0.18	–	≤ 1.25	–	–
E+E22-3C95	≥320	–	≤ 1.5	≤ 1.43	–	–
E+PLT22-3C95	≥320	–	≤ 1.2	≤ 1.14	–	–
E+E22-3C96	≥320	≤ 0.17	–	≤ 1.1	≤ 0.45	≤ 1.0
E+PLT22-3C96	≥320	≤ 0.14	–	≤ 1.0	≤ 0.38	≤ 0.75
E+E22-3F3	≥300	≤ 0.28	–	–	≤ 0.5	–
E+PLT22-3F3	≥300	≤ 0.23	–	–	≤ 0.40	–
E+E22-3F35	≥300	–	–	–	≤ 0.25	≤ 0.4
E+PLT22-3F35	≥300	–	–	–	≤ 0.2	≤ 0.3

1. Measured at 140 °C.

Properties of core sets under power conditions (continued)

GRADE	B (mT) at				
	H = 250 A/m; f = 10 kHz; T = 100 °C	f = 500 kHz; $\hat{B}$ = 100 mT; T = 100 °C	f = 1 MHz; $\hat{B}$ = 30 mT; T = 100 °C	f = 1 MHz; $\hat{B}$ = 50 mT; T = 100 °C	f = 3 MHz; $\hat{B}$ = 10 mT; T = 100 °C
E+E22-3F35	≥300	≤ 3.0	–	–	–
E+PLT22-3F35	≥300	≤ 2.2	–	–	–
E+E22-3F4	≥250	–	≤ 0.8	–	≤ 1.2
E+PLT22-3F4	≥250	–	≤ 0.6	–	≤ 1.0
E+E22-3F45	≥250	–	≤ 0.6	≤ 2.2	≤ 1.0
E+PLT22-3F45	≥250	–	≤ 0.45	≤ 1.7	≤ 0.8

MOUNTING INFORMATION

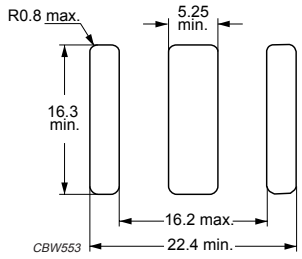

Fig.3 Recommended PCB cut-out for glued cores.

CORES

Effective core parameters of an E/PLT combination

SYMBOL	PARAMETER	VALUE	UNIT
$\Sigma(l/A)$	core factor (C1)	0.324	mm^{-1}
V_e	effective volume	2100	mm^3
l_e	effective length	26.1	mm
A_e	effective area	78.5	mm^2
A_{min}	minimum area	72.6	mm^2
m	mass of E core half	≈ 6.5	g
m	mass of plate	≈ 4	g

Ordering information for plates

GRADE	TYPE NUMBER
3C90	PLT22/16/2.5/S-3C90
3C92 des	PLT22/16/2.5/S-3C92
3C93 des	PLT22/16/2.5/S-3C93
3C94	PLT22/16/2.5/S-3C94
3C95 des	PLT22/16/2.5/S-3C95
3C96 des	PLT22/16/2.5/S-3C96
3F3	PLT22/16/2.5/S-3F3
3F35 des	PLT22/16/2.5/S-3F35
3F4 des	PLT22/16/2.5/S-3F4
3F45 prot	PLT22/16/2.5/S-3F45
3E6	PLT22/16/2.5/S-3E6

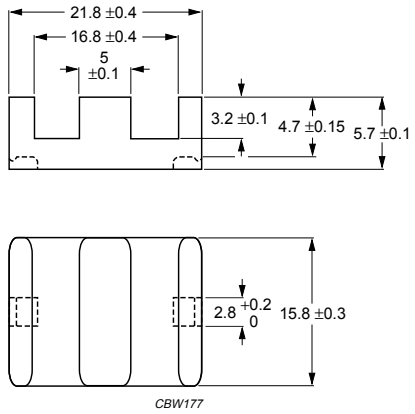

Dimensions in mm.

Fig.1 E22/6/16/R.

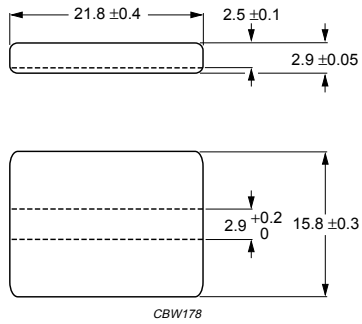

Dimensions in mm.

Fig.2 PLT22/16/2.5/S.

Core halves for use in combination with a slotted plate (PLT/S)

A_L measured in combination with a slotted plate (PLT/S) clamping force for A_L measurements, 20 ±10 N; measurement coil as for E22/6/16.

GRADE	A_L (nH)	μ_e	AIR GAP (μm)	TYPE NUMBER
3C90	160 ±3%	≈ 42	≈ 950	E22/6/16/R-3C90-A160-P
	250 ±3%	≈ 66	≈ 550	E22/6/16/R-3C90-A250-P
	315 ±3%	≈ 83	≈ 400	E22/6/16/R-3C90-A315-P
	400 ±5%	≈ 106	≈ 280	E22/6/16/R-3C90-A400-P
	630 ±8%	≈ 166	≈ 160	E22/6/16/R-3C90-A630-P
	6150 ±25%	≈ 1620	≈ 0	E22/6/16/R-3C90
3C92 des	4410 ±25%	≈ 1140	≈ 0	E22/6/16/R-3C92
3C93 des	5000 ±25%	≈ 1290	≈ 0	E22/6/16/R-3C93
3C94	160 ±3%	≈ 42	≈ 950	E22/6/16/R-3C94-A160-P
	250 ±3%	≈ 66	≈ 550	E22/6/16/R-3C94-A250-P
	315 ±3%	≈ 83	≈ 400	E22/6/16/R-3C94-A315-P
	400 ±5%	≈ 106	≈ 280	E22/6/16/R-3C94-A400-P
	630 ±8%	≈ 166	≈ 160	E22/6/16/R-3C94-A630-P
	6150 ±25%	≈ 1620	≈ 0	E22/6/16/R-3C94
3C95 des	7360 ±25%	≈ 1950	≈ 0	E22/6/16/R-3C95
3C96 des	5450 ±25%	≈ 1440	≈ 0	E22/6/16/R-3C96
3F3	160 ±3%	≈ 42	≈ 950	E22/6/16/R-3F3-A160-P
	250 ±3%	≈ 66	≈ 550	E22/6/16/R-3F3-A250-P
	315 ±3%	≈ 83	≈ 400	E22/6/16/R-3F3-A315-P
	400 ±5%	≈ 106	≈ 280	E22/6/16/R-3F3-A400-P
	630 ±8%	≈ 166	≈ 160	E22/6/16/R-3F3-A630-P
	5000 ±25%	≈ 1320	≈ 0	E22/6/16/R-3F3
3F35 des	4100 ±25%	≈ 1080	≈ 0	E22/6/16/R-3F35
3F4 des	160 ±3%	≈ 42	≈ 950	E22/6/16/R-3F4-A160-P
	250 ±3%	≈ 66	≈ 550	E22/6/16/R-3F4-A250-P
	315 ±3%	≈ 83	≈ 400	E22/6/16/R-3F4-A315-P
	400 ±5%	≈ 106	≈ 280	E22/6/16/R-3F4-A400-P
	630 ±8%	≈ 166	≈ 160	E22/6/16/R-3F4-A630-P
	2900 ±25%	≈ 770	≈ 0	E22/6/16/R-3F4
3F45 prot	2900 ±25%	≈ 770	≈ 0	E22/6/16/R-3F45
3E6	26000 +40/–30%	≈ 6900	≈ 0	E22/6/16/R-3E6

Properties of core sets under power conditions

GRADE	B (mT) at	CORE LOSS (W) at				
	H = 250 A/m; f = 10 kHz; T = 100 °C	f = 100 kHz; $\hat{B}$ = 100 mT; T = 100 °C	f = 100 kHz; $\hat{B}$ = 200 mT; T = 25 °C	f = 100 kHz; $\hat{B}$ = 200 mT; T = 100 °C	f = 400 kHz; $\hat{B}$ = 50 mT; T = 100 °C	f = 500 kHz; $\hat{B}$ = 50 mT; T = 100 °C
E22/R+PLT22/S-3C90	≥320	≤ 0.23	–	–	–	–
E22/R+PLT22/S-3C92	≥370	≤ 0.18	–	≤ 1.25	–	–
E22/R+PLT22/S-3C93	≥320	≤ 0.18[1]	–	≤ 1.25[1]	–	–
E22/R+PLT22/S-3C94	≥320	≤ 0.18	–	≤ 1.25	–	–
E22/R+PLT22/S-3C95	≥320	–	≤ 1.24	≤ 1.18	–	–
E22/R+PLT22/S-3C96	≥320	≤ 0.14	–	≤ 1.0	≤ 0.38	≤ 0.75
E22/R+PLT22/S-3F3	≥300	≤ 0.23	–	–	≤ 0.4	–
E22/R+PLT22/S-3F35	≥300	–	–	–	≤ 0.2	≤ 0.3
E22/R+PLT22/S-3F4	≥250	–	–	–	–	–
E22/R+PLT22/S-3F45	≥250	–	–	–	–	–

1. Measured at 140 °C.

Properties of core sets under power conditions (continued)

GRADE	B (mT) at	CORE LOSS (W) at			
	H = 250 A/m; f = 10 kHz; T = 100 °C	f = 500 kHz; $\hat{B}$ = 100 mT; T = 100 °C	f = 1 MHz; $\hat{B}$ = 30 mT; T = 100 °C	f = 1 MHz; $\hat{B}$ = 50 mT; T = 100 °C	f = 3 MHz; $\hat{B}$ = 10 mT; T = 100 °C
E22/R+PLT22/S-3C90	≥320	–	–	–	–
E22/R+PLT22/S-3C92	≥370	–	–	–	–
E22/R+PLT22/S-3C93	≥320	–	–	–	–
E22/R+PLT22/S-3C94	≥320	–	–	–	–
E22/R+PLT22/S-3C95	≥320	–	–	–	–
E22/R+PLT22/S-3C96	≥320	–	–	–	–
E22/R+PLT22/S-3F3	≥300	–	–	–	–
E22/R+PLT22/S-3F35	≥300	≤ 2.2	–	–	–
E22/R+PLT22/S-3F4	≥250	–	≤ 0.62	–	≤ 1.0
E22/R+PLT22/S-3F45	≥250	–	≤ 0.45	≤ 1.7	≤ 0.8

MOUNTING PARTS

General data and ordering information

ITEM	MATERIAL	FIGURE	TYPE NUMBER
Clamp	stainless steel (CrNi)	3	CLM-E22/PLT22

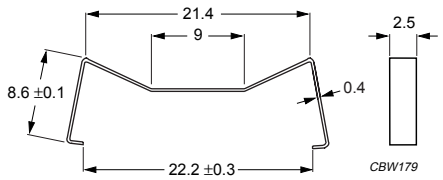

Dimensions in mm.

Fig.3 Clamp for E22/R+PLT22/S.

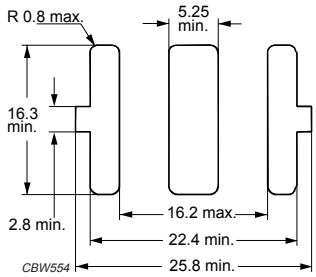

Dimensions in mm.

Fig.4 Recommended PCB cut-out for clamped cores.

CORES

Effective core parameters of a set of E cores

SYMBOL	PARAMETER	VALUE	UNIT
Σ(l/A)	core factor (C1)	0.323	mm^{-1}
V_e	effective volume	5380	mm^3
l_e	effective length	41.4	mm
A_e	effective area	130	mm^2
A_{min}	minimum area	130	mm^2
m	mass of core half	≈ 13	g

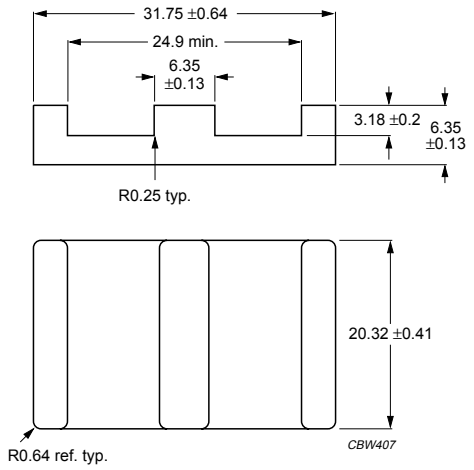

Dimensions in mm.

Fig.1 E32/6/20.

Effective core parameters of an E/PLT combination

SYMBOL	PARAMETER	VALUE	UNIT
Σ(l/A)	core factor (C1)	0.278	mm^{-1}
V_e	effective volume	4560	mm^3
l_e	effective length	35.1	mm
A_e	effective area	130	mm^2
A_{min}	minimum area	130	mm^2
m	mass of plate	≈ 10	g

Ordering information for plates

GRADE	TYPE NUMBER
3C90	PLT32/20/3.2-3C90
3C92 des	PLT32/20/3.2-3C92
3C93 des	PLT32/20/3.2-3C93
3C94	PLT32/20/3.2-3C94
3C95 des	PLT32/20/3.2-3C95
3C96 des	PLT32/20/3.2-3C96
3F3	PLT32/20/3.2-3F3
3F4 des	PLT32/20/3.2-3F4

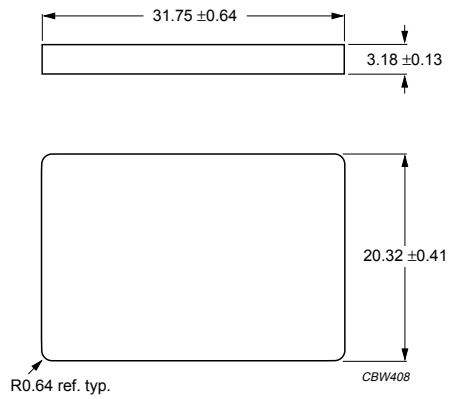

Dimensions in mm.

Fig.2 PLT32/20/3.2.

Core halves for use in combination with an E core

A_L measured in combination with a non-gapped core half, clamping force for A_L measurements, 30 ±10 N, unless stated otherwise.

GRADE	A_L (nH)	μ_e	TOTAL AIR GAP (μm)	TYPE NUMBER
3C90	160 ±3%(1)	≈ 41	≈ 1200	E32/6/20-3C90-E160-E
	250 ±3%(1)	≈ 64	≈ 700	E32/6/20-3C90-E250-E
	315 ±3%	≈ 81	≈ 550	E32/6/20-3C90-A315-E
	400 ±5%	≈ 103	≈ 450	E32/6/20-3C90-A400-E
	630 ±8%	≈ 162	≈ 260	E32/6/20-3C90-A630-E
	6425 ±25%	≈ 1650	≈ 0	E32/6/20-3C90
3C92 des	5000 ±25%	≈ 1290	≈ 0	E32/6/20-3C92
3C93 des	5900 ±25%	≈ 1520	≈ 0	E32/6/20-3C93
3C94	160 ±3%(1)	≈ 41	≈ 1200	E32/6/20-3C94-E160-E
	250 ±3%(1)	≈ 64	≈ 700	E32/6/20-3C94-E250-E
	315 ±3%	≈ 81	≈ 550	E32/6/20-3C94-A315-E
	400 ±5%	≈ 103	≈ 450	E32/6/20-3C94-A400-E
	630 ±8%	≈ 162	≈ 260	E32/6/20-3C94-A630-E
	6425 ±25%	≈ 1650	≈ 0	E32/6/20-3C94
3C95 des	7690 ±25%	≈ 1950	≈ 0	E32/6/20-3C95
3C96 des	6425 ±25%	≈ 1650	≈ 0	E32/6/20-3C96
3F3	160 ±3%(1)	≈ 41	≈ 1200	E32/6/20-3F3-E160-E
	250 ±3%(1)	≈ 64	≈ 700	E32/6/20-3F3-E250-E
	315 ±3%	≈ 81	≈ 550	E32/6/20-3F3-A315-E
	400 ±5%	≈ 103	≈ 450	E32/6/20-3F3-A400-E
	630 ±8%	≈ 162	≈ 260	E32/6/20-3F3-A630-E
	5900 ±25%	≈ 1520	≈ 0	E32/6/20-3F3
3F4 des	160 ±3%(1)	≈ 41	≈ 1200	E32/6/20-3F4-E160-E
	250 ±3%(1)	≈ 64	≈ 700	E32/6/20-3F4-E250-E
	315 ±3%	≈ 81	≈ 550	E32/6/20-3F4-A315-E
	400 ±5%	≈ 103	≈ 450	E32/6/20-3F4-A400-E
	630 ±8%	≈ 162	≈ 260	E32/6/20-3F4-A630-E
	3200 ±25%	≈ 820	≈ 0	E32/6/20-3F4

Note

1. Measured in combination with an equal gapped E core half, clamping force for A_L measurements, 30 ±10 N.

Core halves for use in combination with a plate (PLT)

A_L measured in combination with a plate (PLT), clamping force for A_L measurements, 30 ±10 N.

GRADE	A_L (nH)	μ_e	AIR GAP (μm)	TYPE NUMBER
3C90	160 ±3%	≈ 35	≈ 1200	E32/6/20-3C90-A160-P
	250 ±3%	≈ 55	≈ 700	E32/6/20-3C90-A250-P
	315 ±3%	≈ 69	≈ 550	E32/6/20-3C90-A315-P
	400 ±5%	≈ 87	≈ 450	E32/6/20-3C90-A400-P
	630 ±8%	≈ 138	≈ 260	E32/6/20-3C90-A630-P
	7350 ±25%	≈ 1610	≈ 0	E32/6/20-3C90
3C92 des	5760 ±25%	≈ 1270	≈ 0	E32/6/20-3C92
3C93 des	6780 ±25%	≈ 1500	≈ 0	E32/6/20-3C93
3C94	160 ±3%	≈ 35	≈ 1200	E32/6/20-3C94-A160-P
	250 ±3%	≈ 55	≈ 700	E32/6/20-3C94-A250-P
	315 ±3%	≈ 69	≈ 550	E32/6/20-3C94-A315-P
	400 ±5%	≈ 87	≈ 450	E32/6/20-3C94-A400-P
	630 ±8%	≈ 138	≈ 260	E32/6/20-3C94-A630-P
	7350 ±25%	≈ 1610	≈ 0	E32/6/20-3C94
3C95 des	8750 ±25%	≈ 1880	≈ 0	E32/6/20-3C95
3C96 des	7350 ±25%	≈ 1610	≈ 0	E32/6/20-3C96
3F3	160 ±3%	≈ 35	≈ 1200	E32/6/20-3F3-A160-P
	250 ±3%	≈ 55	≈ 700	E32/6/20-3F3-A250-P
	315 ±3%	≈ 69	≈ 550	E32/6/20-3F3-A315-P
	400 ±5%	≈ 87	≈ 450	E32/6/20-3F3-A400-P
	630 ±8%	≈ 138	≈ 260	E32/6/20-3F3-A630-P
	6780 ±25%	≈ 1490	≈ 0	E32/6/20-3F3
3F4 des	160 ±3%	≈ 35	≈ 1200	E32/6/20-3F4-A160-P
	250 ±3%	≈ 55	≈ 700	E32/6/20-3F4-A250-P
	315 ±3%	≈ 69	≈ 550	E32/6/20-3F4-A315-P
	400 ±5%	≈ 87	≈ 450	E32/6/20-3F4-A400-P
	630 ±8%	≈ 138	≈ 260	E32/6/20-3F4-A630-P
	3700 ±25%	≈ 810	≈ 0	E32/6/20-3F4

Properties of core sets under power conditions

GRADE	B (mT) at	CORE LOSS (W) at			
	H = 250 A/m; f = 10 kHz; T = 100 °C	f = 100 kHz; $\hat{B}$ = 100 mT; T = 100 °C	f = 100 kHz; $\hat{B}$ = 200 mT; T = 25 °C	f = 100 kHz; $\hat{B}$ = 200 mT; T = 100 °C	f = 400 kHz; $\hat{B}$ = 50 mT; T = 100 °C
E+E32-3C90	≥320	≤ 0.65	–	–	–
E+PLT32-3C90	≥320	≤ 0.55	–	–	–
E+E32-3C92	≥370	≤ 0.48	–	≤ 3.4	–
E+PLT32-3C92	≥370	≤ 0.41	–	≤ 2.9	–
E+E32-3C93	≥320	≤ 0.48[1]	–	≤ 3.4[1]	–
E+PLT32-3C93	≥320	≤ 0.41[1]	–	≤ 2.9[1]	–
E+E32-3C94	≥320	≤ 0.48	–	≤ 3.4	–
E+PLT32-3C94	≥320	≤ 0.41	–	≤ 2.9	–
E+E32-3C95	≥320	–	≤ 3.17	≤ 3.0	–
E+PLT32-3C95	≥320	–	≤ 2.69	≤ 2.55	–
E+E32-3C96	≥320	≤ 0.36	–	≤ 2.6	≤ 0.9
E+PLT32-3C96	≥320	≤ 0.3	–	≤ 2.2	≤ 0.8
E+E32-3F3	≥300	≤ 0.65	–	–	≤ 1.0
E+PLT32-3F3	≥300	≤ 0.6	–	–	≤ 0.85
E+E32-3F4	≥250	–	–	–	–
E+PLT32-3F4	≥250	–	–	–	–

1. Measured at 140 °C.

Properties of core sets under power conditions (continued)

GRADE	B (mT) at	CORE LOSS (W) at			
	H = 250 A/m; f = 10 kHz; T = 100 °C	f = 500 kHz; $\hat{B}$ = 50 mT; T = 100 °C	f = 500 kHz; $\hat{B}$ = 100 mT; T = 100 °C	f = 1 MHz; $\hat{B}$ = 30 mT; T = 100 °C	f = 3 MHz; $\hat{B}$ = 10 mT; T = 100 °C
E+E32-3C96	≥320	≤ 2.0	–	–	–
E+PLT32-3C96	≥320	≤ 1.7	–	–	–
E+E32-3F3	≥300	–	–	–	–
E+PLT32-3F3	≥300	–	–	–	–
E+E32-3F4	≥250	–	–	≤ 1.6	≤ 2.5
E+PLT32-3F4	≥250	–	–	≤ 1.36	≤ 2.2

CORES

Effective core parameters of an E/PLT combination

SYMBOL	PARAMETER	VALUE	UNIT
Σ(l/A)	core factor (C1)	0.278	mm^{-1}
V_e	effective volume	4560	mm^3
l_e	effective length	35.1	mm
A_e	effective area	130	mm^2
A_{min}	minimum area	119	mm^2
m	mass of core half	≈ 13	g
m	mass of plate	≈ 10	g

Ordering information for plates

GRADE	TYPE NUMBER
3C90	PLT32/20/3.2/R-3C90
3C92 des	PLT32/20/3.2/R-3C92
3C93 des	PLT32/20/3.2/R-3C93
3C94	PLT32/20/3.2/R-3C94
3C95 des	PLT32/20/3.2/R-3C95
3C96 des	PLT32/20/3.2/R-3C96
3F3	PLT32/20/3.2/R-3F3
3F4 des	PLT32/20/3.2/R-3F4

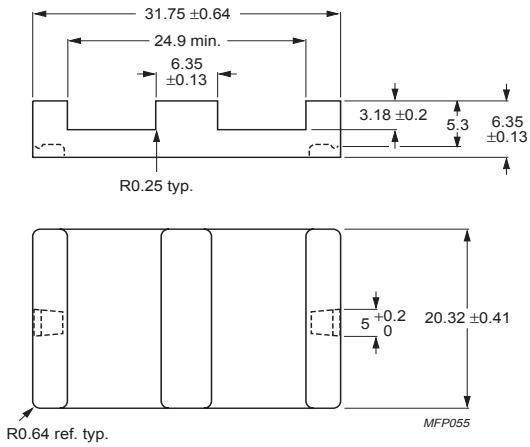

Dimensions in mm.

Fig.1 E32/6/20/R.

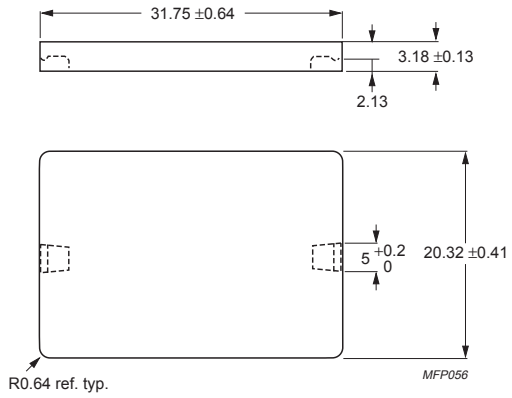

Dimensions in mm.

Fig.2 PLT32/20/3.2/R.

Core halves for use in combination with a recessed plate (PLT/R)

A_L measured in combination with a recessed plate (PLT/R), clamping force for A_L measurements, 30 ±10 N.

GRADE	A_L (nH)	μ_e	AIR GAP (μm)	TYPE NUMBER
3C90	160 ±3%	≈ 35	≈ 1200	E32/6/20/R-3C90-A160-P
	250 ±3%	≈ 55	≈ 700	E32/6/20/R-3C90-A250-P
	315 ±3%	≈ 69	≈ 550	E32/6/20/R-3C90-A315-P
	400 ±5%	≈ 87	≈ 450	E32/6/20/R-3C90-A400-P
	630 ±8%	≈ 138	≈ 260	E32/6/20/R-3C90-A630-P
	7350 ±25%	≈ 1610	≈ 0	E32/6/20/R-3C90
3C92 des	5760 ±25%	≈ 1270	≈ 0	E32/6/20/R-3C92
3C93 des	6780 ±25%	≈ 1500	≈ 0	E32/6/20/R-3C93
3C94	160 ±3%	≈ 35	≈ 1200	E32/6/20/R-3C94-A160-P
	250 ±3%	≈ 55	≈ 700	E32/6/20/R-3C94-A250-P
	315 ±3%	≈ 69	≈ 550	E32/6/20/R-3C94-A315-P
	400 ±5%	≈ 87	≈ 450	E32/6/20/R-3C94-A400-P
	630 ±8%	≈ 138	≈ 260	E32/6/20/R-3C94-A630-P
	7350 ±25%	≈ 1610	≈ 0	E32/6/20/R-3C94
3C95 des	8750 ±25%	≈ 1880	≈ 0	E32/6/20/R-3C95
3C96 des	7350 ±25%	≈ 1610	≈ 0	E32/6/20/R-3C96
3F3	160 ±3%	≈ 35	≈ 1200	E32/6/20/R-3F3-A160-P
	250 ±3%	≈ 55	≈ 700	E32/6/20/R-3F3-A250-P
	315 ±3%	≈ 69	≈ 550	E32/6/20/R-3F3-A315-P
	400 ±5%	≈ 87	≈ 450	E32/6/20/R-3F3-A400-P
	630 ±8%	≈ 138	≈ 260	E32/6/20/R-3F3-A630-P
	6780 ±25%	≈ 1490	≈ 0	E32/6/20/R-3F3
3F4 des	160 ±3%	≈ 35	≈ 1200	E32/6/20/R-3F4-A160-P
	250 ±3%	≈ 55	≈ 700	E32/6/20/R-3F4-A250-P
	315 ±3%	≈ 69	≈ 550	E32/6/20/R-3F4-A315-P
	400 ±5%	≈ 87	≈ 450	E32/6/20/R-3F4-A400-P
	630 ±8%	≈ 138	≈ 260	E32/6/20/R-3F4-A630-P
	3700 ±25%	≈ 810	≈ 0	E32/6/20/R-3F4

Properties of core sets under power conditions

GRADE	B (mT) at	CORE LOSS (W) at			
	H = 250 A/m; f = 10 kHz; T = 100 °C	f = 100 kHz; $\hat{B}$ = 100 mT; T = 100 °C	f = 100 kHz; $\hat{B}$ = 200 mT; T = 25 °C	f = 100 kHz; $\hat{B}$ = 200 mT; T = 100 °C	f = 400 kHz; $\hat{B}$ = 50 mT; T = 100 °C
E32/R+PLT32/R-3C90	≥320	≤ 0.55	–	–	–
E32/R+PLT32/R-3C92	≥370	≤ 0.41	–	≤ 2.9	–
E32/R+PLT32/R-3C93	≥320	≤ 0.41[1]	–	≤ 2.9[1]	–
E32/R+PLT32/R-3C94	≥320	≤ 0.41	–	≤ 2.9	–
E32/R+PLT32/R-3C95	≥320	–	≤ 2.69	≤ 2.55	–
E32/R+PLT32/R-3C96	≥320	≤ 0.3	–	≤ 2.2	≤ 0.8
E32/R+PLT32/R-3F3	≥300	≤ 0.6	–	–	≤ 0.85
E32/R+PLT32/R-3F4	≥250	–	–	–	–

1. Measured at 140 °C.

Properties of core sets under power conditions (continued)

GRADE	B (mT) at	CORE LOSS (W) at			
	H = 250 A/m; f = 10 kHz; T = 100 °C	f = 500 kHz; $\hat{B}$ = 50 mT; T = 100 °C	f = 500 kHz; $\hat{B}$ = 100 mT; T = 100 °C	f = 1 MHz; $\hat{B}$ = 30 mT; T = 100 °C	f = 3 MHz; $\hat{B}$ = 10 mT; T = 100 °C
E32/R+PLT32/R-3C90	≥320	–	–	–	–
E32/R+PLT32/R-3C92	≥370	–	–	–	–
E32/R+PLT32/R-3C93	≥320	–	–	–	–
E32/R+PLT32/R-3C94	≥320	–	–	–	–
E32/R+PLT32/R-3C95	≥320	–	–	–	–
E32/R+PLT32/R-3C96	≥320	≤ 1.7	–	–	–
E32/R+PLT32/R-3F3	≥300	–	–	–	–
E32/R+PLT32/R-3F4	≥250	–	–	≤ 1.36	≤ 2.2

CORES

Effective core parameters of a set of E cores

SYMBOL	PARAMETER	VALUE	UNIT
Σ(l/A)	core factor (C1)	0.272	mm^{-1}
V_e	effective volume	10 200	mm^3
l_e	effective length	52.4	mm
A_e	effective area	194	mm^2
A_{min}	minimum area	194	mm^2
m	mass of core half	≈ 25	g

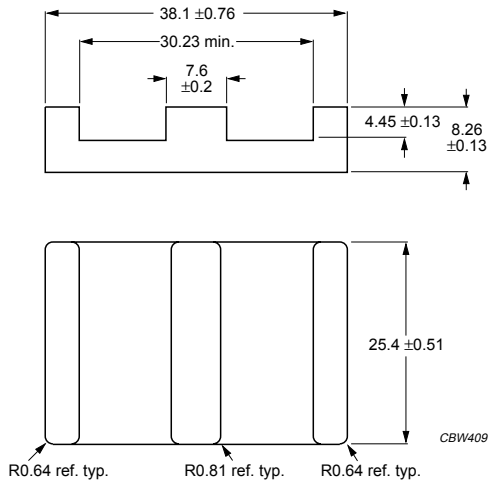

Dimensions in mm.

Fig.1 E38/8/25 core half.

Effective core parameters of an E/PLT combination

SYMBOL	PARAMETER	VALUE	UNIT
Σ(l/A)	core factor (C1)	0.226	mm^{-1}
V_e	effective volume	8460	mm^3
l_e	effective length	43.7	mm
A_e	effective area	194	mm^2
A_{min}	minimum area	194	mm^2
m	mass of plate	≈ 18	g

Ordering information for plates

GRADE	TYPE NUMBER
3C90	PLT38/25/3.8-3C90
3C92 des	PLT38/25/3.8-3C92
3C93 des	PLT38/25/3.8-3C93
3C94	PLT38/25/3.8-3C94
3C95 des	PLT38/25/3.8-3C95
3F3	PLT38/25/3.8-3F3
3F4 des	PLT38/25/3.8-3F4

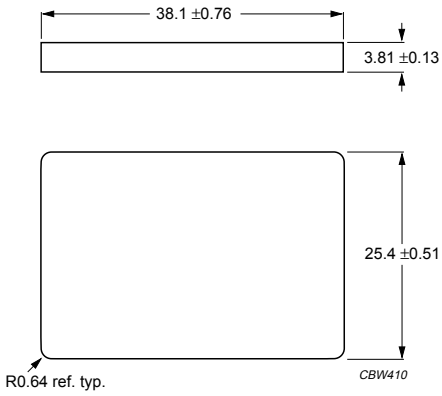

Dimensions in mm.

Fig.2 PLT38/25/3.8.

Core halves for use in combination with an E core

A_L measured in combination with a non-gapped core half, clamping force for A_L measurements, 40 ±15 N, unless stated otherwise.

GRADE	A_L (nH)	μ_e	TOTAL AIR GAP (μm)	TYPE NUMBER
3C90	250 ±3%(1)	≈ 54	≈ 1100	E38/8/25-3C90-E250-E
	315 ±3%(1)	≈ 68	≈ 850	E38/8/25-3C90-E315-E
	400 ±3%(1)	≈ 86	≈ 650	E38/8/25-3C90-E400-E
	630 ±5%	≈ 136	≈ 400	E38/8/25-3C90-A630-E
	1000 ±10%	≈ 216	≈ 250	E38/8/25-3C90-A1000-E
	7940 ±25%	≈ 1720	≈ 0	E38/8/25-3C90
3C92 des	6100 ±25%	≈ 1320	≈ 0	E38/8/25-3C92
3C93 des	7250 ±25%	≈ 1570	≈ 0	E38/8/25-3C93
3C94	250 ±3%(1)	≈ 54	≈ 1100	E38/8/25-3C94-E250-E
	315 ±3%(1)	≈ 68	≈ 850	E38/8/25-3C94-E315-E
	400 ±3%(1)	≈ 86	≈ 650	E38/8/25-3C94-E400-E
	630 ±5%	≈ 136	≈ 400	E38/8/25-3C94-A630-E
	1000 ±10%	≈ 216	≈ 250	E38/8/25-3C94-A1000-E
	7940 ±25%	≈ 1720	≈ 0	E38/8/25-3C94
3C95 des	9600 ±25%	≈ 2060	≈ 0	E38/8/25-3C95
3F3	250 ±3%(1)	≈ 54	≈ 1100	E38/8/25-3F3-E250-E
	315 ±3%(1)	≈ 68	≈ 850	E38/8/25-3F3-E315-E
	400 ±3%(1)	≈ 86	≈ 650	E38/8/25-3F3-E400-E
	630 ±5%	≈ 136	≈ 400	E38/8/25-3F3-A630-E
	1000 ±10%	≈ 216	≈ 250	E38/8/25-3F3-A1000-E
	7250 ±25%	≈ 1570	≈ 0	E38/8/25-3F3
3F4 des	250 ±3%(1)	≈ 54	≈ 1100	E38/8/25-3F4-E250-E
	315 ±3%(1)	≈ 68	≈ 850	E38/8/25-3F4-E315-E
	400 ±3%(1)	≈ 86	≈ 650	E38/8/25-3F4-E400-E
	630 ±5%	≈ 136	≈ 400	E38/8/25-3F4-A630-E
	1000 ±10%	≈ 216	≈ 250	E38/8/25-3F4-A1000-E
	3880 ±25%	≈ 840	≈ 0	E38/8/25-3F4

Note

1. Measured in combination with an equal gapped core half, clamping force for A_L measurements, 40 ±15 N.

Core halves for use in combination with a plate (PLT)

A_L measured in combination with a plate (PLT), clamping force for A_L measurements, 40 ±15 N.

GRADE	A_L (nH)	μ_e	AIR GAP (μm)	TYPE NUMBER
3C90	250 ±3%	≈ 45	≈ 1100	E38/8/25-3C90-A250-P
	315 ±3%	≈ 57	≈ 850	E38/8/25-3C90-A315-P
	400 ±3%	≈ 72	≈ 650	E38/8/25-3C90-A400-P
	630 ±5%	≈ 113	≈ 400	E38/8/25-3C90-A630-P
	1000 ±10%	≈ 180	≈ 250	E38/8/25-3C90-A1000-P
	9250 ±25%	≈ 1660	≈ 0	E38/8/25-3C90
3C92 des	7150 ±25%	≈ 1290	≈ 0	E38/8/25-3C92
3C93 des	8500 ±25%	≈ 1530	≈ 0	E38/8/25-3C93
3C94	250 ±3%	≈ 45	≈ 1100	E38/8/25-3C94-A250-P
	315 ±3%	≈ 57	≈ 850	E38/8/25-3C94-A315-P
	400 ±3%	≈ 72	≈ 650	E38/8/25-3C94-A400-P
	630 ±5%	≈ 113	≈ 400	E38/8/25-3C94-A630-P
	1000 ±10%	≈ 180	≈ 250	E38/8/25-3C94-A1000-P
	9250 ±25%	≈ 1660	≈ 0	E38/8/25-3C94
3C95 des	11200 ±25%	≈ 1990	≈ 0	E38/8/25-3C95
3F3	250 ±3%	≈ 45	≈ 1100	E38/8/25-3F3-A250-P
	315 ±3%	≈ 57	≈ 850	E38/8/25-3F3-A315-P
	400 ±3%	≈ 72	≈ 650	E38/8/25-3F3-A400-P
	630 ±5%	≈ 113	≈ 400	E38/8/25-3F3-A630-P
	1000 ±10%	≈ 180	≈ 250	E38/8/25-3F3-A1000-P
	8500 ±25%	≈ 1520	≈ 0	E38/8/25-3F3
3F4 des	250 ±3%	≈ 45	≈ 1100	E38/8/25-3F4-A250-P
	315 ±3%	≈ 57	≈ 850	E38/8/25-3F4-A315-P
	400 ±3%	≈ 72	≈ 650	E38/8/25-3F4-A400-P
	630 ±5%	≈ 113	≈ 400	E38/8/25-3F4-A630-P
	1000 ±10%	≈ 180	≈ 250	E38/8/25-3F4-A1000-P
	4600 ±25%	≈830	≈0	E38/8/25-3F4

Properties of core sets under power conditions

GRADE	B (mT) at	CORE LOSS (W) at			
	H = 250 A/m; f = 10 kHz; T = 100 °C	f = 100 kHz; $\hat{B}$ = 100 mT; T = 100 °C	f = 100 kHz; $\hat{B}$ = 200 mT; T = 25 °C	f = 100 kHz; $\hat{B}$ = 200 mT; T = 100 °C	f = 400 kHz; $\hat{B}$ = 50 mT; T = 100 °C
E+E38-3C90	≥320	≤ 1.25	–	–	–
E+PLT38-3C90	≥320	≤ 1.05	–	–	–
E+E38-3C92	≥370	≤ 1.0	–	≤ 6.0	–
E+PLT38-3C92	≥370	≤ 0.85	–	≤ 5.0	–
E+E38-3C93	≥320	≤ 1.0[1]	–	≤ 6.0[1]	–
E+PLT38-3C93	≥320	≤ 0.85[1]	–	≤ 5.0[1]	–
E+E38-3C94	≥320	≤ 1.0	–	≤ 6.0	–
E+PLT38-3C94	≥320	≤ 0.85	–	≤ 5.0	–
E+E38-3C95	≥320	–	≤ 6.43	≤ 6.12	–
E+PLT38-3C95	≥320	–	≤ 5.0	≤ 4.74	–
E+E38-3F3	≥300	≤ 1.3	–	–	≤ 2.0
E+PLT38-3F3	≥300	≤ 1.1	–	–	≤ 1.65
E+E38-3F4	≥250	–	–	–	–
E+PLT38-3F4	≥250	–	–	–	–

1. Measured at 140 °C.

Properties of core sets under power conditions (continued)

GRADE	B (mT) at	CORE LOSS (W) at			
	H = 250 A/m; f = 10 kHz; T = 100 °C	f = 500 kHz; $\hat{B}$ = 50 mT; T = 100 °C	f = 500 kHz; $\hat{B}$ = 100 mT; T = 100 °C	f = 1 MHz; $\hat{B}$ = 30 mT; T = 100 °C	f = 3 MHz; $\hat{B}$ = 10 mT; T = 100 °C
E+E38-3F4	≥250	–	–	≤ 3.0	≤ 5.0
E+PLT38-3F4	≥250	–	–	≤ 2.5	≤ 4.0

CORES

Effective core parameters of a set of E cores

SYMBOL	PARAMETER	VALUE	UNIT
Σ(l/A)	core factor (C1)	0.276	mm^{-1}
V_e	effective volume	13900	mm^3
l_e	effective length	61.1	mm
A_e	effective area	229	mm^2
A_{min}	minimum area	229	mm^2
m	mass of core half	≈ 35	g

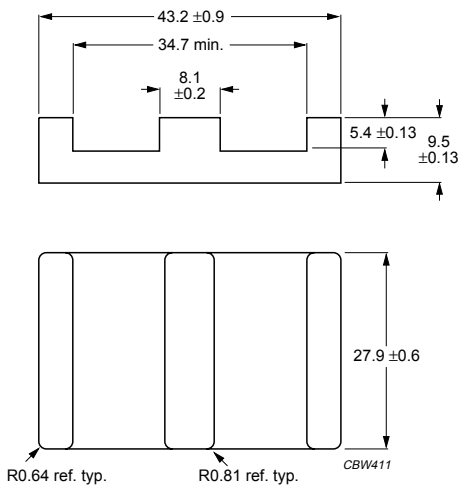

Dimensions in mm.

Fig.1 E43/10/28 core half.

Effective core parameters of an E/PLT combination

SYMBOL	PARAMETER	VALUE	UNIT
Σ(l/A)	core factor (C1)	0.226	mm^{-1}
V_e	effective volume	11500	mm^3
l_e	effective length	50.4	mm
A_e	effective area	229	mm^2
A_{min}	minimum area	229	mm^2
m	mass of core half	≈ 24	g

Ordering information

GRADE	TYPE NUMBER
3C90	PLT43/28/4.1-3C90
3C92 des	PLT43/28/4.1-3C92
3C93 des	PLT43/28/4.1-3C93
3C94	PLT43/28/4.1-3C94
3C95 des	PLT43/28/4.1-3C95
3F3	PLT43/28/4.1-3F3
3F4 des	PLT43/28/4.1-3F4

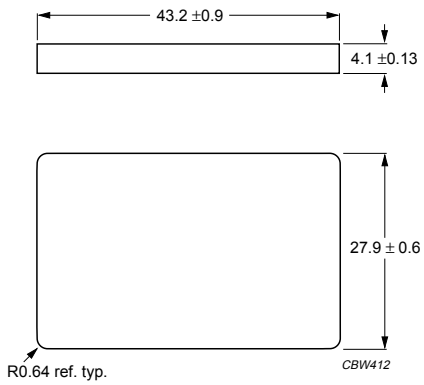

Dimensions in mm.

Fig.2 PLT43/28/4.1.

Core halves for use in combination with an E core

A_L measured in combination with a non-gapped core half, clamping force for A_L measurements, 40 ±20 N, unless stated otherwise.

GRADE	A_L (nH)	μ_e	TOTAL AIR GAP (μm)	TYPE NUMBER
3C90	250 ±3%(1)	≈ 55	≈ 1100	E43/10/28-3C90-E250-E
	315 ±3%(1)	≈ 69	≈ 800	E43/10/28-3C90-E315-E
	400 ±3%(1)	≈ 87	≈ 700	E43/10/28-3C90-E400-E
	630 ±5%	≈ 138	≈ 400	E43/10/28-3C90-A630-E
	1000 ±10%	≈ 219	≈ 250	E43/10/28-3C90-A1000-E
	8030 ±25%	≈ 1710	≈ 0	E43/10/28-3C90
3C92 des	6300 ±25%	≈ 1380	≈ 0	E43/10/28-3C92
3C93 des	7310 ±25%	≈ 1610	≈ 0	E43/10/28-3C93
3C94	250 ±3%(1)	≈ 55	≈ 1100	E43/10/28-3C94-E250-E
	315 ±3%(1)	≈ 69	≈ 800	E43/10/28-3C94-E315-E
	400 ±3%(1)	≈ 87	≈ 700	E43/10/28-3C94-E400-E
	630 ±5%	≈ 138	≈ 400	E43/10/28-3C94-A630-E
	1000 ±10%	≈ 219	≈ 250	E43/10/28-3C94-A1000-E
	8030 ±25%	≈ 1710	≈ 0	E43/10/28-3C94
3C95 des	9700 ±25%	≈ 2060	≈ 0	E43/10/28-3C95
3F3	250 ±3%(1)	≈ 55	≈ 1100	E43/10/28-3F3-E250-E
	315 ±3%(1)	≈ 69	≈ 800	E43/10/28-3F3-E315-E
	400 ±3%(1)	≈ 87	≈ 700	E43/10/28-3F3-E400-E
	630 ±5%	≈ 138	≈ 400	E43/10/28-3F3-A630-E
	1000 ±10%	≈ 219	≈ 250	E43/10/28-3F3-A1000-E
	7310 ±25%	≈ 1600	≈ 0	E43/10/28-3F3
3F4 des	250 ±3%(1)	≈ 55	≈ 1100	E43/10/28-3F4-E250-E
	315 ±3%(1)	≈ 69	≈ 800	E43/10/28-3F4-E315-E
	400 ±3%(1)	≈ 87	≈ 700	E43/10/28-3F4-E400-E
	630 ±5%	≈ 138	≈ 400	E43/10/28-3F4-A630-E
	1000 ±10%	≈ 219	≈ 250	E43/10/28-3F4-A1000-E
	3860 ±25%	≈ 850	≈ 0	E43/10/28-3F4

Note

1. Measured in combination with an equal gapped E core half, clamping force for A_L measurements, 40 ±20 N.

Core halves for use in combination with a plate (PLT)

A_L measured in combination with a plate (PLT), clamping force for A_L measurements, 40 ±20 N.

GRADE	A_L (nH)	μ_e	AIR GAP (μm)	TYPE NUMBER
3C90	250 ±3%	≈ 45	≈ 1100	E43/10/28-3C90-A250-P
	315 ±3%	≈ 57	≈ 800	E43/10/28-3C90-A315-P
	400 ±3%	≈ 72	≈ 700	E43/10/28-3C90-A400-P
	630 ±5%	≈ 113	≈ 400	E43/10/28-3C90-A630-P
	1000 ±10%	≈ 180	≈ 250	E43/10/28-3C90-A1000-P
	9250 ±25%	≈ 1710	≈ 0	E43/10/28-3C90
3C92 des	7460 ±25%	≈ 1340	≈ 0	E43/10/28-3C92
3C93 des	8700 ±25%	≈ 1560	≈ 0	E43/10/28-3C93
3C94	250 ±3%	≈ 45	≈ 1100	E43/10/28-3C94-A250-P
	315 ±3%	≈ 57	≈ 800	E43/10/28-3C94-A315-P
	400 ±3%	≈ 72	≈ 700	E43/10/28-3C94-A400-P
	630 ±5%	≈ 113	≈ 400	E43/10/28-3C94-A630-P
	1000 ±10%	≈ 180	≈ 250	E43/10/28-3C94-A1000-P
	9250 ±25%	≈ 1710	≈ 0	E43/10/28-3C94
3C95 des	11060 ±25%	≈ 1940	≈ 0	E43/10/28-3C95
3F3	250 ±3%	≈ 45	≈ 1100	E43/10/28-3F3-A250-P
	315 ±3%	≈ 57	≈ 800	E43/10/28-3F3-A315-P
	400 ±3%	≈ 72	≈ 700	E43/10/28-3F3-A400-P
	630 ±5%	≈ 113	≈ 400	E43/10/28-3F3-A630-P
	1000 ±10%	≈ 180	≈ 250	E43/10/28-3F3-A1000-P
	8700 ±25%	≈ 1560	≈ 0	E43/10/28-3F3
3F4 des	250 ±3%	≈ 45	≈ 1100	E43/10/28-3F4-A250-P
	315 ±3%	≈ 57	≈ 800	E43/10/28-3F4-A315-P
	400 ±3%	≈ 72	≈ 700	E43/10/28-3F4-A400-P
	630 ±5%	≈ 113	≈ 400	E43/10/28-3F4-A630-P
	1000 ±10%	≈ 180	≈ 250	E43/10/28-3F4-A1000-P
	4660 ±25%	≈ 850	≈ 0	E43/10/28-3F4

Properties of core sets under power conditions

GRADE	B (mT) at	CORE LOSS (W) at			
	H = 250 A/m; f = 10 kHz; T = 100 °C	f = 100 kHz; $\hat{B}$ = 100 mT; T = 100 °C	f = 100 kHz; $\hat{B}$ = 200 mT; T = 25 °C	f = 100 kHz; $\hat{B}$ = 200 mT; T = 100 °C	f = 400 kHz; $\hat{B}$ = 50 mT; T = 100 °C
E+E43-3C90	≥320	≤ 1.8	–	–	–
E+PLT43-3C90	≥320	≤ 1.5	–	–	–
E+E43-3C92	≥370	≤ 1.4	–	≤ 8.0	–
E+PLT43-3C92	≥370	≤ 1.2	–	≤ 7.0	–
E+E43-3C93	≥320	≤ 1.4[1]	–	≤ 8.0[1]	–
E+PLT43-3C93	≥320	≤ 1.2[1]	–	≤ 7.0[1]	–
E+E43-3C94	≥320	≤ 1.4	–	≤ 8.0	–
E+PLT43-3C94	≥320	≤ 1.2	–	≤ 7.0	–
E+E43-3C95	≥320	–	≤ 8.76	≤ 8.34	–
E+PLT43-3C95	≥320	–	≤ 7.25	≤ 6.9	–
E+E43-3F3	≥300	≤ 1.8	–	–	≤ 2.7
E+PLT43-3F3	≥300	≤ 1.5	–	–	≤ 2.25
E+E43-3F4	≥250	–	–	–	–
E+PLT43-3F4	≥250	–	–	–	–

1. Measured at 140 °C.

Properties of core sets under power conditions (continued)

GRADE	B (mT) at	CORE LOSS (W) at			
	H = 250 A/m; f = 10 kHz; T = 100 °C	f = 500 kHz; $\hat{B}$ = 50 mT; T = 100 °C	f = 500 kHz; $\hat{B}$ = 100 mT; T = 100 °C	f = 1 MHz; $\hat{B}$ = 30 mT; T = 100 °C	f = 3 MHz; $\hat{B}$ = 10 mT; T = 100 °C
E+E43-3F4	≥250	–	–	≤ 4.2	≤ 6.5
E+PLT43-3F4	≥250	–	–	≤ 3.5	≤ 5.5

CORES

Effective core parameters of a set of E cores

SYMBOL	PARAMETER	VALUE	UNIT
Σ(l/A)	core factor (C1)	0.268	mm^{-1}
V_e	effective volume	24 600	mm^3
l_e	effective length	80.6	mm
A_e	effective area	308	mm^2
A_{min}	minimum area	308	mm^2
m	mass of core half	≈ 62	g

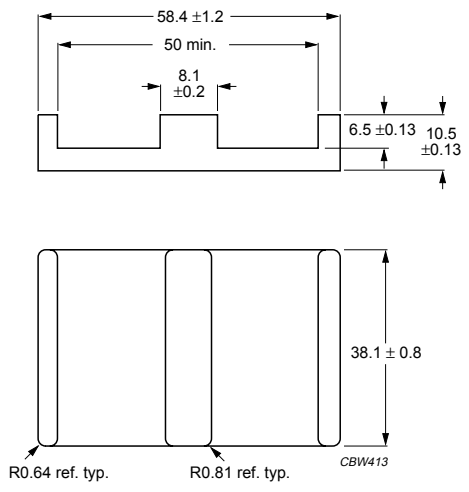

Dimensions in mm.

Fig.1 E58/11/38 core half.

Effective core parameters of an E/PLT combination

SYMBOL	PARAMETER	VALUE	UNIT
Σ(l/A)	core factor (C1)	0.224	mm^{-1}
V_e	effective volume	20 800	mm^3
l_e	effective length	67.7	mm
A_e	effective area	310	mm^2
A_{min}	minimum area	310	mm^2
m	mass of core half	≈ 44	g

Ordering information for plates

GRADE	TYPE NUMBER
3C90	PLT58/38/4-3C90
3C92 des	PLT58/38/4-3C92
3C93 des	PLT58/38/4-3C93
3C94	PLT58/38/4-3C94
3C95 des	PLT58/38/4-3C95
3F3	PLT58/38/4-3F3
3F4 des	PLT58/38/4-3F4

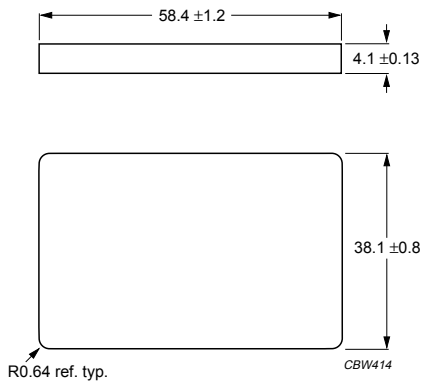

Dimensions in mm.

Fig.2 PLT 58/38/4.

Core halves for use in combination with an E core

A_L measured in combination with a non-gapped core half, clamping force for A_L measurements, 40 ±20 N, unless stated otherwise.

GRADE	A_L (nH)	μ_e	TOTAL AIR GAP (μm)	TYPE NUMBER
3C90	315 ±3%[1]	≈ 67	≈ 1400	E58/11/38-3C90-E315-E
	400 ±3%[1]	≈ 85	≈ 1100	E58/11/38-3C90-E400-E
	630 ±5%[1]	≈ 134	≈ 650	E58/11/38-3C90-E630-E
	1000 ±5%	≈ 213	≈ 400	E58/11/38-3C90-A1000-E
	1600 ±10%	≈ 341	≈ 200	E58/11/38-3C90-A1600-E
	8480 ±25%	≈ 1800	≈ 0	E58/11/38-3C90
3C92 des	6600 ±25%	≈ 1410	≈ 0	E58/11/38-3C92
3C93 des	7710 ±25%	≈ 1640	≈ 0	E58/11/38-3C93
3C94	315 ±3%[1]	≈ 67	≈ 1400	E58/11/38-3C94-E315-E
	400 ±3%[1]	≈ 85	≈ 1100	E58/11/38-3C94-E400-E
	630 ±5%[1]	≈ 134	≈ 650	E58/11/38-3C94-E630-E
	1000 ±5%	≈ 213	≈ 400	E58/11/38-3C94-A1000-E
	1600 ±10%	≈ 341	≈ 200	E58/11/38-3C94-A1600-E
	8480 ±25%	≈ 1800	≈ 0	E58/11/38-3C94
3C95 des	10330 ±25%	≈ 2150	≈ 0	E58/11/38-3C95
3F3	315 ±3%[1]	≈ 67	≈ 1400	E58/11/38-3F3-E315-E
	400 ±3%[1]	≈ 85	≈ 1100	E58/11/38-3F3-E400-E
	630 ±5%[1]	≈ 134	≈ 650	E58/11/38-3F3-E630-E
	1000 ±5%	≈ 213	≈ 400	E58/11/38-3F3-A1000-E
	1600 ±10%	≈ 341	≈ 200	E58/11/38-3F3-A1600-E
	7710 ±25%	≈ 1640	≈ 0	E58/11/38-3F3
3F4 des	315 ±3%[1]	≈ 67	≈ 1400	E58/11/38-3F4-E315-E
	400 ±3%[1]	≈ 85	≈ 1100	E58/11/38-3F4-E400-E
	630 ±5%[1]	≈ 134	≈ 650	E58/11/38-3F4-E630-E
	1000 ±5%	≈ 213	≈ 400	E58/11/38-3F4-A1000-E
	1600 ±10%	≈ 341	≈ 200	E58/11/38-3F4-A1600-E
	4030 ±25%	≈ 860	≈ 0	E58/11/38-3F4

Note

1. Measured in combination with an equal gapped E core half, clamping force for A_L measurements, 40 ±20 N.

Core halves for use in combination with a plate (PLT)

A_L measured in combination with a plate (PLT), clamping force for A_L measurements, 40 ±20 N.

GRADE	A_L (nH)	μ_e	AIR GAP (μm)	TYPE NUMBER
3C90	315 ±3%	≈ 56	≈ 1400	E58/11/38-3C90-A315-P
	400 ±3%	≈ 71	≈ 1100	E58/11/38-3C90-A400-P
	630 ±5%	≈ 112	≈ 650	E58/11/38-3C90-A630-P
	1000 ±5%	≈ 178	≈ 400	E58/11/38-3C90-A1000-P
	1600 ±10%	≈ 285	≈ 200	E58/11/38-3C90-A1600-P
	9970 ±25%	≈ 1780	≈ 0	E58/11/38-3C90
3C92 des	7770 ±25%	≈ 1390	≈ 0	E58/11/38-3C92
3C93 des	9070 ±25%	≈ 1620	≈ 0	E58/11/38-3C93
3C94	315 ±3%	≈ 56	≈ 1400	E58/11/38-3C94-A315-P
	400 ±3%	≈ 71	≈ 1100	E58/11/38-3C94-A400-P
	630 ±5%	≈ 112	≈ 650	E58/11/38-3C94-A630-P
	1000 ±5%	≈ 178	≈ 400	E58/11/38-3C94-A1000-P
	1600 ±10%	≈ 285	≈ 200	E58/11/38-3C94-A1600-P
	9970 ±25%	≈ 1780	≈ 0	E58/11/38-3C94
3C95 des	12090 ±25%	≈ 2100	≈ 0	E58/11/38-3C95
3F3	315 ±3%	≈ 56	≈ 1400	E58/11/38-3F3-A315-P
	400 ±3%	≈ 71	≈ 1100	E58/11/38-3F3-A400-P
	630 ±5%	≈ 112	≈ 650	E58/11/38-3F3-A630-P
	1000 ±5%	≈ 178	≈ 400	E58/11/38-3F3-A1000-P
	1600 ±10%	≈ 285	≈ 200	E58/11/38-3F3-A1600-P
	9070 ±25%	≈ 1620	≈ 0	E58/11/38-3F3
3F4 des	315 ±3%	≈ 56	≈ 1400	E58/11/38-3F4-A315-P
	400 ±3%	≈ 71	≈ 1100	E58/11/38-3F4-A400-P
	630 ±5%	≈ 112	≈ 650	E58/11/38-3F4-A630-P
	1000 ±5%	≈ 178	≈ 400	E58/11/38-3F4-A1000-P
	1600 ±10%	≈ 285	≈ 200	E58/11/38-3F4-A1600-P
	4780 ±25%	≈ 850	≈ 0	E58/11/38-3F4

Properties of core sets under power conditions

GRADE	B (mT) at	CORE LOSS (W) at			
	H = 250 A/m; f = 10 kHz; T = 100 °C	f = 100 kHz; $\hat{B}$ = 100 mT; T = 100 °C	f = 100 kHz; $\hat{B}$ = 200 mT; T = 25 °C	f = 100 kHz; $\hat{B}$ = 200 mT; T = 100 °C	f = 400 kHz; $\hat{B}$ = 50 mT; T = 100 °C
E+E58-3C90	≥320	≤ 3.0	–	–	–
E+PLT58-3C90	≥320	≤ 2.6	–	–	–
E+E58-3C92	≥370	≤ 2.4	–	≤ 15	–
E+PLT58-3C92	≥370	≤ 2.0	–	≤ 13	–
E+E58-3C93	≥320	≤ 2.4[1]	–	≤ 15[1]	–
E+PLT58-3C93	≥320	≤ 2.0[1]	–	≤ 13[1]	–
E+E58-3C94	≥320	≤ 2.4	–	≤ 15	–
E+PLT58-3C94	≥320	≤ 2.0	–	≤ 13	–
E+E58-3C95	≥320	–	≤ 15.5	≤ 14.8	–
E+PLT58-3C95	≥320	–	≤ 13.1	≤ 12.5	–
E+E58-3F3	≥300	≤ 3.0	–	–	≤ 4.7
E+PLT58-3F3	≥300	≤ 2.6	–	–	≤ 4.0
E+E58-3F4	≥250	–	–	–	–
E+PLT58-3F4	≥250	–	–	–	–

1. Measured at 140 °C.

Properties of core sets under power conditions (continued)

GRADE	B (mT) at	CORE LOSS (W) at			
	H = 250 A/m; f = 10 kHz; T = 100 °C	f = 500 kHz; $\hat{B}$ = 50 mT; T = 100 °C	f = 500 kHz; $\hat{B}$ = 100 mT; T = 100 °C	f = 1 MHz; $\hat{B}$ = 30 mT; T = 100 °C	f = 3 MHz; $\hat{B}$ = 10 mT; T = 100 °C
E+E58-3F4	≥250	–	–	≤ 7.4	≤ 12
E+PLT58-3F4	≥250	–	–	≤ 6.25	≤ 10

CORES

Effective core parameters of a set of E cores

SYMBOL	PARAMETER	VALUE	UNIT
Σ(l/A)	core factor (C1)	0.156	mm^{-1}
V_e	effective volume	40 700	mm^3
l_e	effective length	79.9	mm
A_e	effective area	519	mm^2
A_{min}	minimum area	519	mm^2
m	mass of core half	≈ 100	g

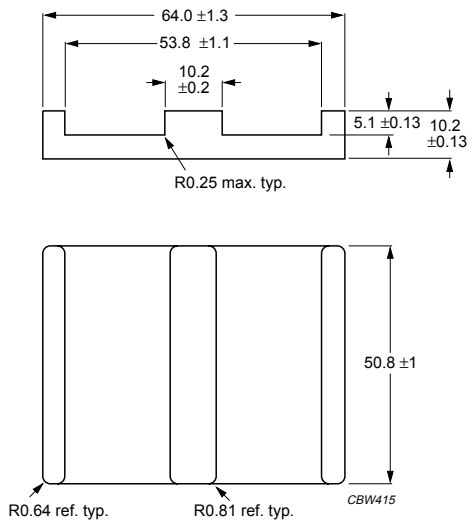

Dimensions in mm.

Fig.1 E64/10/50.

Effective core parameters of an E/PLT combination

SYMBOL	PARAMETER	VALUE	UNIT
Σ(l/A)	core factor (C1)	0.136	mm^{-1}
V_e	effective volume	35 500	mm^3
l_e	effective length	69.7	mm
A_e	effective area	519	mm^2
A_{min}	minimum area	519	mm^2
m	mass of plate	≈ 78	g

Ordering information for plates

GRADE	TYPE NUMBER
3C90	PLT64/50/5-3C90
3C92 des	PLT64/50/5-3C92
3C93 des	PLT64/50/5-3C93
3C94	PLT64/50/5-3C94
3C95 des	PLT64/50/5-3C95
3F3	PLT64/50/5-3F3
3F4 des	PLT64/50/5-3F4

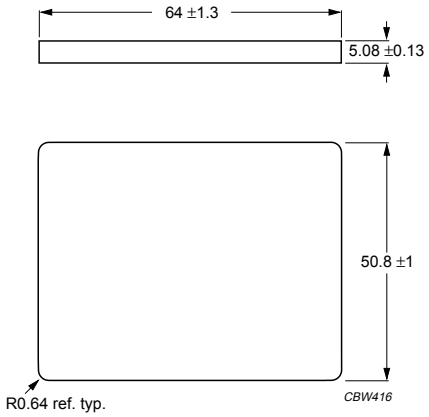

Dimensions in mm.

Fig.2 PLT 64/50/5.

Core halves for use in combination with an E core

A_L measured in combination with a non-gapped core half, clamping force for A_L measurements, 100 ±30 N, unless stated otherwise.

GRADE	A_L (nH)	μ_e	TOTAL AIR GAP (μm)	TYPE NUMBER
3C90	630 ±3%[1]	≈ 78	≈ 1100	E64/10/50-3C90-E630-E
	1000 ±3%[1]	≈ 124	≈ 660	E64/10/50-3C90-E1000-E
	1600 ±5%	≈ 199	≈ 385	E64/10/50-3C90-A1600-E
	2500 ±10%	≈ 310	≈ 225	E64/10/50-3C90-A2500-E
	3150 ±10%	≈ 391	≈ 170	E64/10/50-3C90-A3150-E
	14640 ±25%	≈ 1820	≈ 0	E64/10/50-3C90
3C92 des	11200 ±25%	≈ 1390	≈ 0	E64/10/50-3C92
3C93 des	13300 ±25%	≈ 1650	≈ 0	E64/10/50-3C93
3C94	630 ±3%[1]	≈ 78	≈ 1100	E64/10/50-3C94-E630-E
	1000 ±3%[1]	≈ 124	≈ 660	E64/10/50-3C94-E1000-E
	1600 ±5%	≈ 199	≈ 385	E64/10/50-3C94-A1600-E
	2500 ±10%	≈ 310	≈ 225	E64/10/50-3C94-A2500-E
	3150 ±10%	≈ 391	≈ 170	E64/10/50-3C94-A3150-E
	14640 ±25%	≈ 1820	≈ 0	E64/10/50-3C94
3C95 des	17890 ±25%	≈ 2190	≈ 0	E64/10/50-3C95
3F3	630 ±3%[1]	≈ 78	≈ 1100	E64/10/50-3F3-E630-E
	1000 ±3%[1]	≈ 124	≈ 660	E64/10/50-3F3-E1000-E
	1600 ±5%	≈ 199	≈ 385	E64/10/50-3F3-A1600-E
	2500 ±10%	≈ 310	≈ 225	E64/10/50-3F3-A2500-E
	3150 ±10%	≈ 391	≈ 170	E64/10/50-3F3-A3150-E
	13300 ±25%	≈ 1650	≈ 0	E64/10/50-3F3
3F4 des	630 ±3%[1]	≈ 78	≈ 1100	E64/10/50-3F4-E630-E
	1000 ±3%[1]	≈ 124	≈ 660	E64/10/50-3F4-E1000-E
	1600 ±5%	≈ 199	≈ 385	E64/10/50-3F4-A1600-E
	2500 ±10%	≈ 310	≈ 225	E64/10/50-3F4-A2500-E
	3150 ±10%	≈ 391	≈ 170	E64/10/50-3F4-A3150-E
	6960 ±25%	≈ 860	≈ 0	E64/10/50-3F4

Note

1. Measured in combination with an equal-gapped core half, clamping force for A_L measurements, 100 ±30 N.

Core halves for use in combination with a plate (PLT)

A_L measured in combination with a plate (PLT), clamping force for A_L measurements, 100 ±30 N.

GRADE	A_L (nH)	μ_e	AIR GAP (μm)	TYPE NUMBER
3C90	630 ±3%	≈ 78	≈ 1100	E64/10/50-3C90-A630-P
	1000 ±3%	≈ 124	≈ 660	E64/10/50-3C90-A1000-P
	1600 ±5%	≈ 199	≈ 385	E64/10/50-3C90-A1600-P
	2500 ±10%	≈ 310	≈ 225	E64/10/50-3C90-A2500-P
	3150 ±10%	≈ 391	≈ 170	E64/10/50-3C90-A3150-P
	16540 ±25%	≈ 1790	≈ 0	E64/10/50-3C90
3C92 des	12700 ±25%	≈ 1370	≈ 0	E64/10/50-3C92
3C93 des	15050 ±25%	≈ 1630	≈ 0	E64/10/50-3C93
3C94	630 ±3%	≈ 78	≈ 1100	E64/10/50-3C94-A630-P
	1000 ±3%	≈ 124	≈ 660	E64/10/50-3C94-A1000-P
	1600 ±5%	≈ 199	≈ 385	E64/10/50-3C94-A1600-P
	2500 ±10%	≈ 310	≈ 225	E64/10/50-3C94-A2500-P
	3150 ±10%	≈ 391	≈ 170	E64/10/50-3C94-A3150-P
	16540 ±25%	≈ 1790	≈ 0	E64/10/50-3C94
3C95 des	20150 ±25%	≈ 2150	≈ 0	E64/10/50-3C95
3F3	630 ±3%	≈ 78	≈ 1100	E64/10/50-3F3-A630-P
	1000 ±3%	≈ 124	≈ 660	E64/10/50-3F3-A1000-P
	1600 ±5%	≈ 199	≈ 385	E64/10/50-3F3-A1600-P
	2500 ±10%	≈ 310	≈ 225	E64/10/50-3F3-A2500-P
	3150 ±10%	≈ 391	≈ 170	E64/10/50-3F3-A3150-P
	15050 ±25%	≈ 1630	≈ 0	E64/10/50-3F3
3F4 des	630 ±3%	≈ 78	≈ 1100	E64/10/50-3F4-A630-P
	1000 ±3%	≈ 124	≈ 660	E64/10/50-3F4-A1000-P
	1600 ±5%	≈ 199	≈ 385	E64/10/50-3F4-A1600-P
	2500 ±10%	≈ 310	≈ 225	E64/10/50-3F4-A2500-P
	3150 ±10%	≈ 391	≈ 170	E64/10/50-3F4-A3150-P
	7920 ±25%	≈ 860	≈ 0	E64/10/50-3F4

Properties of core sets under power conditions

GRADE	B (mT) at	CORE LOSS (W) at			
	H = 250 A/m; f = 10 kHz; T = 100 °C	f = 100 kHz; $\hat{B}$ = 100 mT; T = 100 °C	f = 100 kHz; $\hat{B}$ = 200 mT; T = 25 °C	f = 100 kHz; $\hat{B}$ = 200 mT; T = 100 °C	f = 400 kHz; $\hat{B}$ = 50 mT; T = 100 °C
E+E64-3C90	≥320	≤ 4.8	–	–	–
E+PLT64-3C90	≥320	≤ 4.2	–	–	–
E+E64-3C92	≥370	≤ 3.6	–	≤ 25	–
E+PLT64-3C92	≥370	≤ 3.2	–	≤ 23	–
E+E64-3C93	≥320	≤ 3.6[1]	–	≤ 25[1]	–
E+PLT64-3C93	≥320	≤ 3.2[1]	–	≤ 23[1]	–
E+E64-3C94	≥320	≤ 3.6	–	≤ 25	–
E+PLT64-3C94	≥320	≤ 3.2	–	≤ 23	–
E+E64-3C95	≥320	–	≤ 25.6	≤ 24.4	–
E+PLT64-3C95	≥320	–	≤ 22.4	≤ 21.3	–
E+E64-3F3	≥300	≤ 4.8	–	–	≤ 7.8
E+PLT64-3F3	≥300	≤ 4.2	–	–	≤ 6.8
E+E64-3F4	≥250	–	–	–	–
E+PLT64-3F4	≥250	–	–	–	–

1. Measured at 140 °C.

Properties of core sets under power conditions (continued)

GRADE	B (mT) at	CORE LOSS (W) at			
	H = 250 A/m; f = 10 kHz; T = 100 °C	f = 500 kHz; $\hat{B}$ = 50 mT; T = 100 °C	f = 500 kHz; $\hat{B}$ = 100 mT; T = 100 °C	f = 1 MHz; $\hat{B}$ = 30 mT; T = 100 °C	f = 3 MHz; $\hat{B}$ = 10 mT; T = 100 °C
E+E64-3F4	≥250	–	–	≤ 12	≤ 20
E+PLT64-3F4	≥250	–	–	≤ 10.5	≤ 17

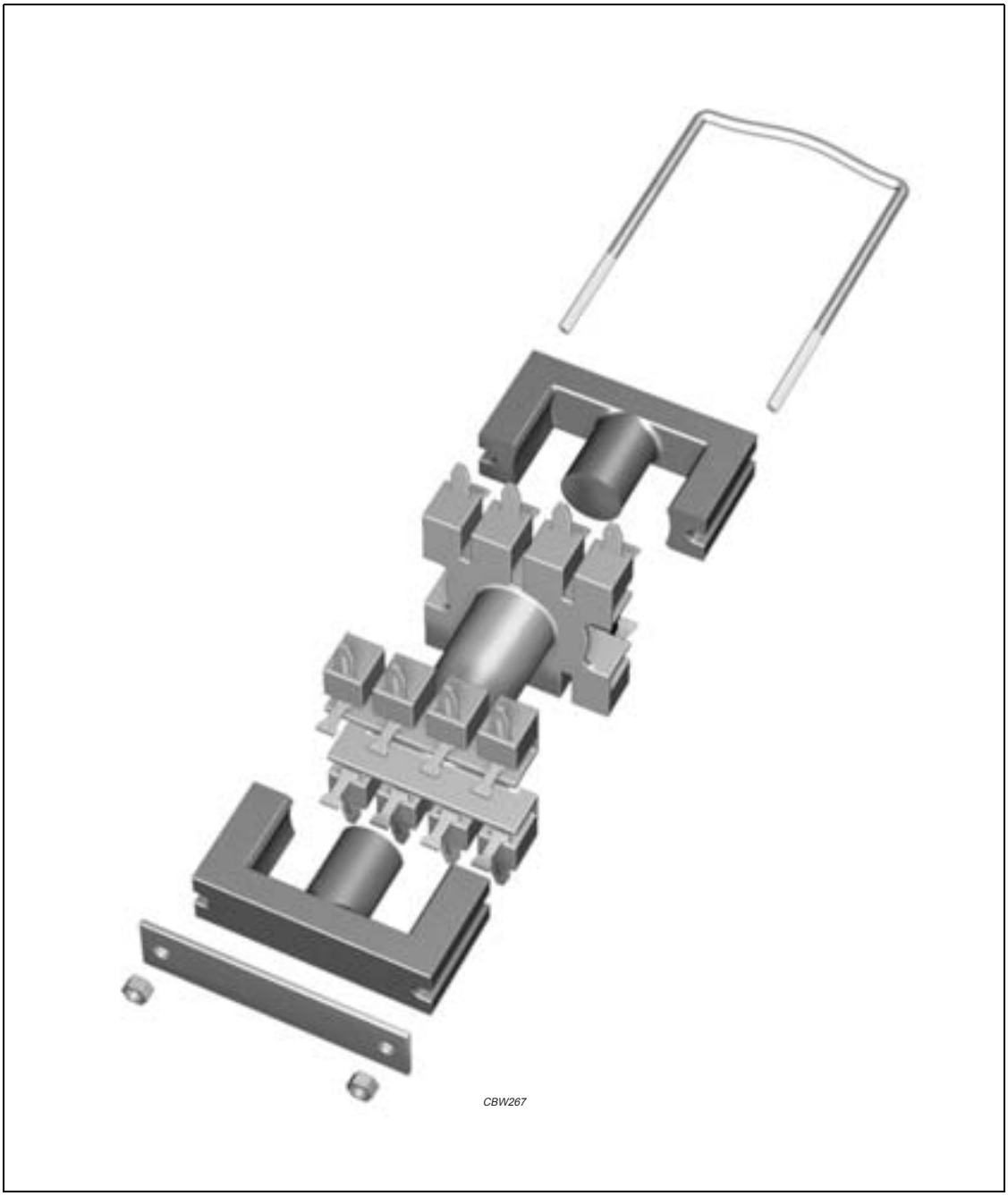
CBW267

PRODUCT OVERVIEW AND TYPE NUMBER STRUCTURE

Product overview EC cores

CORE TYPE	V_e (mm^3)	A_e (mm^2)	MASS (g)
EC35	6530	84.3	19
EC41	10800	121	30
EC52	18800	180	56
EC70	40100	279	127

- In accordance with IEC 62317, part 11.

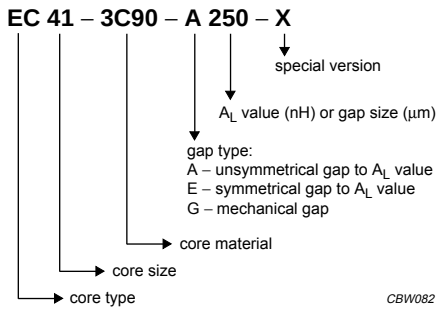

Fig.1 Type number structure for cores.

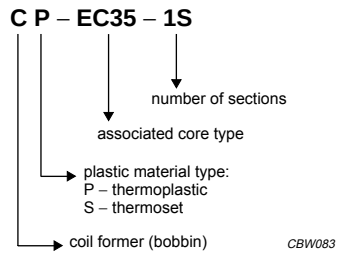

Fig.2 Type number structure for core sets.

CORE SETS

Effective core parameters

SYMBOL	PARAMETER	VALUE	UNIT
$\Sigma(l/A)$	core factor (C1)	0.918	mm^{-1}
V_e	effective volume	6530	mm^3
l_e	effective length	77.4	mm
A_e	effective area	84.3	mm^2
A_{min}	minimum area	71	mm^2
m	mass of core half	≈ 19	g

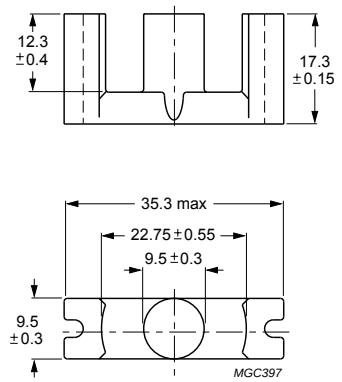

Dimensions in mm.

Fig.1 EC35 core half.

Core halves

A_L measured in combination with an non-gapped core half, unless stated otherwise.

GRADE	A_L (nH)	μ_e	TOTAL AIR GAP (μm)	TYPE NUMBER
3C81 sup	100 ± 3%(1)	≈ 73	≈ 1470	EC35-3C81-E100
	160 ± 3%(1)	≈ 117	≈ 820	EC35-3C81-E160
	250 ± 3%	≈ 184	≈ 470	EC35-3C81-A250
	315 ± 5%	≈ 231	≈ 350	EC35-3C81-A315
	400 ± 10%	≈ 290	≈ 260	EC35-3C81-A400
	≥ 2250	≥ 1640	≈ 0	EC35-3C81
3C90 sup	100 ± 3%(1)	≈ 73	≈ 1470	EC35-3C90-E100
	160 ± 3%(1)	≈ 117	≈ 820	EC35-3C90-E160
	250 ± 3%	≈ 184	≈ 470	EC35-3C90-A250
	315 ± 5%	≈ 231	≈ 350	EC35-3C90-A315
	400 ±10%	≈ 290	≈ 260	EC35-3C90-A400
	2100 ±25%	≈ 1530	≈ 0	EC35-3C90

Note

1. Measured in combination with an equal gapped core half (symmetrical air gap).

Properties of core sets under power conditions

GRADE	B (mT) at	CORE LOSS (W) at	
	H = 250 A/m; f = 25 kHz; T = 100 °C	f = 25 kHz; B = 200 mT; T = 100 °C	f = 100 kHz; B = 100 mT; T = 100 °C
3C81	≥320	≤ 1.40	–
3C90	≥320	≤ 0.79	≤ 0.83

COIL FORMERS

General data 8-slots EC35 coil former for insertable pins

PARAMETER	SPECIFICATION
Coil former material	polyamide (PA6.6), glass-reinforced, flame retardant in accordance with *"UL 94V-0"*; UL file number E44716(M)
Maximum operating temperature	130 °C, *"IEC 60085"*, class B

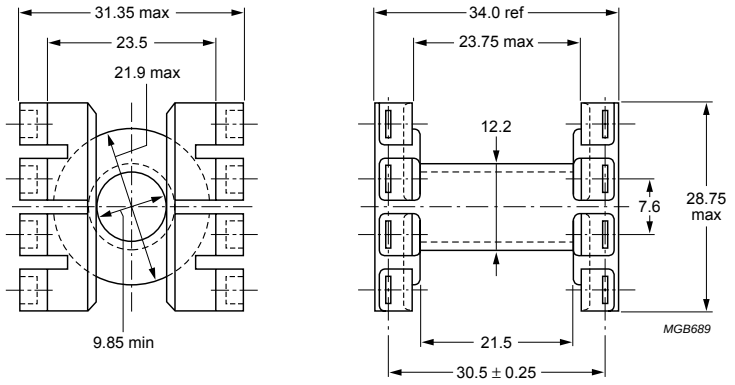

Dimensions in mm.

Fig.2 EC35 coil former; 8-slots.

Winding data and area product for 8-slots EC35 coil former for insertable pins

Coil formers with inserted pins are available on request.

NUMBER OF SECTIONS	MINIMUM WINDING AREA (mm^2)	NOMINAL WINDING WIDTH (mm)	AVERAGE LENGTH OF TURN (mm)	AREA PRODUCT Ae x Aw (mm^4)	TYPE NUMBER
1	97.1	21.5	53.1	8190	CP-EC35-1S

MOUNTING PARTS

General data and ordering information

ITEM	REMARKS	MOUNT	FIGURE	TYPE NUMBER
Insertable pins	solderability: *"IEC 68-2-20"*, Part 2, Test Ta, method 1; material: copper-zinc alloy (CuZn), tin (Sn) plated	general	3	PIN-EC
		horizontal	4	PIN/H-EC
Base plate 2 holes	aluminium		5	BPL2-EC35
Base plate 4 holes	aluminium		6	BPL4-EC35
Clamp	copper-zinc alloy (CuZn)		7	CLM/U-EC35

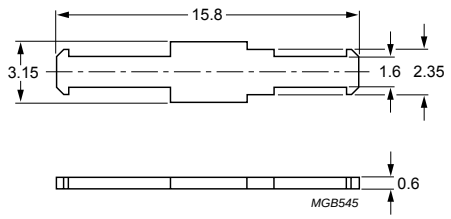

Dimensions in mm.

Fig.3 EC pin; general mount.

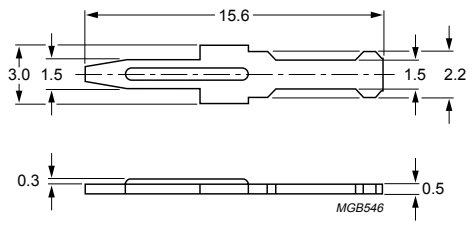

Dimensions in mm.

Fig.4 EC pin; horizontal mount.

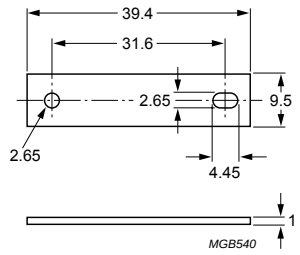

Dimensions in mm.

Fig.5 EC35 base plate; 2 holes.

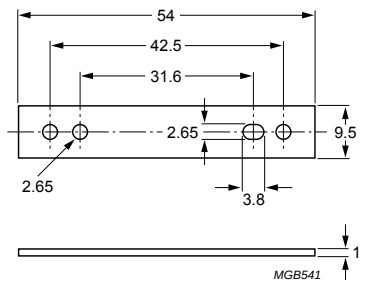

Dimensions in mm.

Fig.6 EC35 base plate; 4 holes.

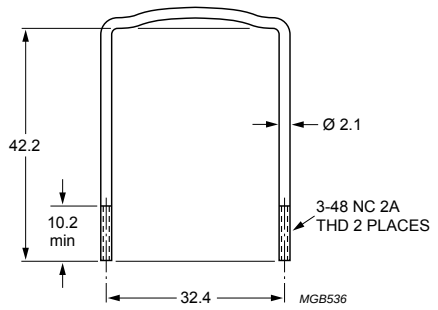

Dimensions in mm.

Fig.7 EC35 clamp.

CORE SETS

Effective core parameters

SYMBOL	PARAMETER	VALUE	UNIT
$\Sigma(l/A)$	core factor (C1)	0.735	mm^{-1}
V_e	effective volume	10800	mm^3
l_e	effective length	89.3	mm
A_e	effective area	121	mm^2
A_{min}	minimum area	106	mm^2
m	mass of core half	≈ 30	g

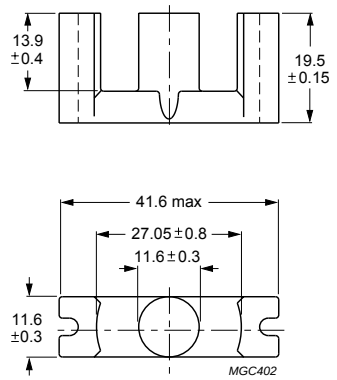

Dimensions in mm.

Fig.1 EC41 core half.

Core halves

A_L measured in combination with an non-gapped core half, unless stated otherwise.

GRADE	A_L (nH)	μ_e	TOTAL AIR GAP (μm)	TYPE NUMBER
3C81 sup	100 ± 3%(1)	≈ 59	≈ 2200	EC41-3C81-E100
	160 ± 3%(1)	≈ 94	≈ 1220	EC41-3C81-E160
	250 ± 3%(1)	≈ 147	≈ 705	EC41-3C81-E250
	315 ± 5%	≈ 186	≈ 530	EC41-3C81-A315
	400 ± 5%	≈ 236	≈ 390	EC41-3C81-A400
	≥ 2800	≥ 1640	≈ 0	EC41-3C81
3C90 sup	100 ± 3%(1)	≈ 59	≈ 2200	EC41-3C90-E100
	160 ± 3%(1)	≈ 94	≈ 1220	EC41-3C90-E160
	250 ± 3%(1)	≈ 147	≈ 705	EC41-3C90-E250
	315 ± 5%	≈ 186	≈ 530	EC41-3C90-A315
	400 ± 5%	≈ 236	≈ 390	EC41-3C90-A400
	2700 ± 25%	≈ 1580	≈ 0	EC41-3C90

Note

1. Measured in combination with an equal gapped core half (symmetrical air gap).

Properties of core sets under power conditions

GRADE	B (mT) at	CORE LOSS (W) at	
	H = 250 A/m; f = 25 kHz; T = 100 °C	f = 25 kHz; $\hat{B}$ = 200 mT; T = 100 °C	f = 100 kHz; $\hat{B}$ = 100 mT; T = 100 °C
3C81	≥320	≤ 2.2	–
3C90	≥320	≤ 1.3	≤ 1.4

COIL FORMERS

General data 8-slots EC41 coil former for insertable pins

PARAMETER	SPECIFICATION
Coil former material	polyamide (PA6.6), glass-reinforced, flame retardant in accordance with *"UL 94V-0"*; UL file number E44716(M)
Maximum operating temperature	130 °C, *"IEC 60085"*, class B

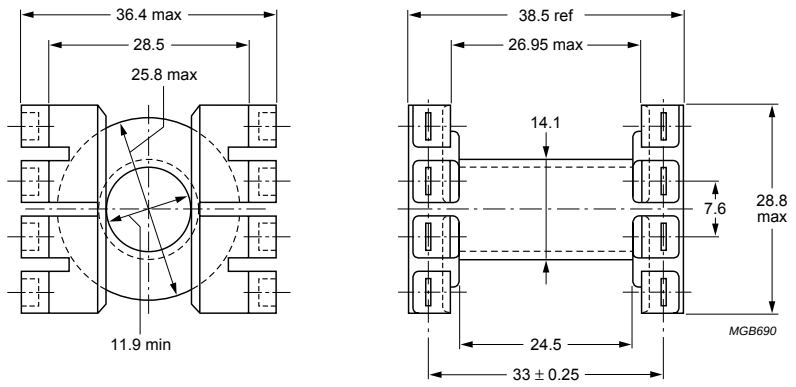

Dimensions in mm.

Fig.2 EC41 coil former; 8-slots.

Winding data and area product for 8-slots EC41 coil former for insertable pins

Coil formers with inserted pins are available on request.

NUMBER OF SECTIONS	MINIMUM WINDING AREA (mm^2)	NOMINAL WINDING WIDTH (mm)	AVERAGE LENGTH OF TURN (mm)	AREA PRODUCT Ae x Aw (mm^4)	TYPE NUMBER
1	137.5	24.5	62.4	16600	CP-EC41-1S

MOUNTING PARTS

General data and ordering information

ITEM	REMARKS	MOUNT	FIGURE	TYPE NUMBER
Insertable pins	solderability: *"IEC 68-2-20"*, Part 2, Test Ta, method 1 material: copper-zinc alloy (CuZn), tin (Sn) plated	general	3	PIN-EC
		horizontal	4	PIN/H-EC
		vertical	5	PIN/V-EC41
Clamp	copper-zinc alloy (CuZn)		6	CLM/U-EC41
Base plate 4 holes	aluminium (Al)		7	BPL4-EC41

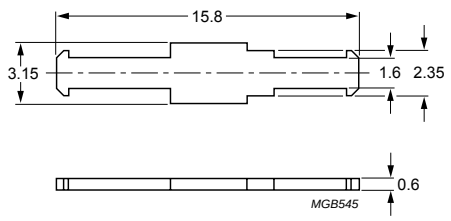

Dimensions in mm.

Fig.3 EC pin; general mount.

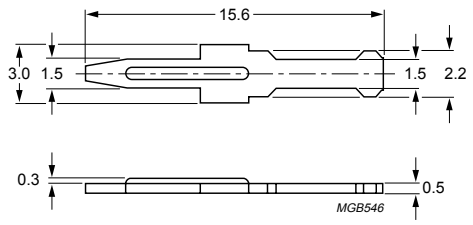

Dimensions in mm.

Fig.4 EC pin; horizontal mount.

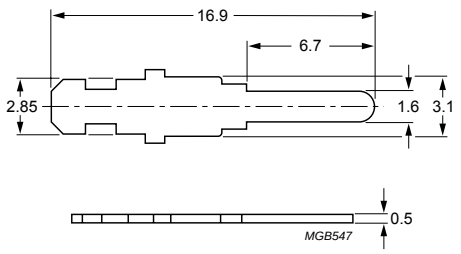

Dimensions in mm.

Fig.5 EC41 pin; vertical mount.

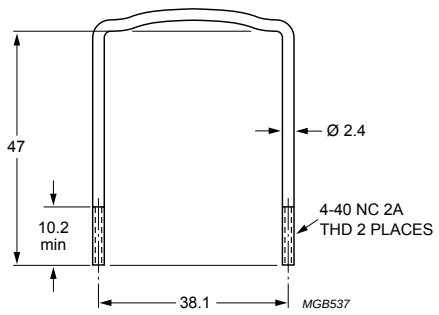

Dimensions in mm.

Fig.6 EC41 clamp.

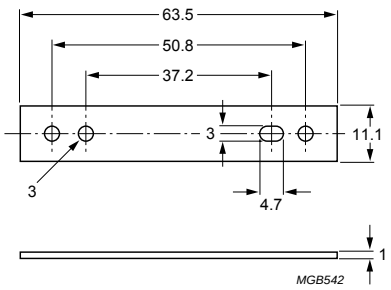

Dimensions in mm.

Fig.7 EC41 base plate; 4 holes.

CORE SETS

Effective core parameters

SYMBOL	PARAMETER	VALUE	UNIT
$\Sigma(l/A)$	core factor (C1)	0.581	mm^{-1}
V_e	effective volume	18800	mm^3
l_e	effective length	105	mm
A_e	effective area	180	mm^2
A_{min}	minimum area	141	mm^2
m	mass of core half	≈ 56	g

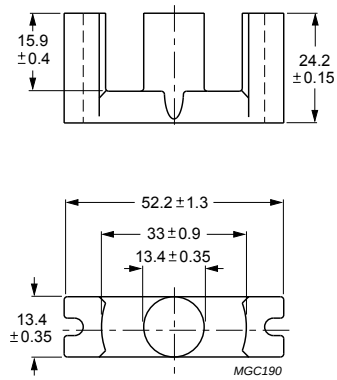

Dimensions in mm.

Fig.1 EC52 core half.

Core halves

A_L measured in combination with an non-gapped core half, unless stated otherwise.

GRADE	A_L (nH)	μ_e	TOTAL AIR GAP (μm)	TYPE NUMBER
3C81 sup	160 ± 3%(1)	≈ 74	≈ 1920	EC52-3C81-E160
	250 ± 3%(1)	≈ 116	≈ 1100	EC52-3C81-E250
	315 ± 3%(1)	≈ 147	≈ 830	EC52-3C81-E315
	400 ± 3%	≈ 185	≈ 620	EC52-3C81-A400
	630 ± 5%	≈ 290	≈ 350	EC52-3C81-A630
	≥ 3550	≥ 1640	≈ 0	EC52-3C81
3C90 sup	160 ± 3%(1)	≈ 74	≈ 1920	EC52-3C90-E160
	250 ± 3%(1)	≈ 116	≈ 1100	EC52-3C90-E250
	315 ± 3%(1)	≈ 147	≈ 830	EC52-3C90-E315
	400 ± 3%	≈ 185	≈ 620	EC52-3C90-A400
	630 ± 5%	≈ 290	≈ 350	EC52-3C90-A630
	3600 ± 25%	≈ 1660	≈ 0	EC52-3C90

Note

1. Measured in combination with an equal gapped core half (symmetrical air gap).

Properties of core sets under power conditions

GRADE	B (mT) at	CORE LOSS (W) at	
	H = 250 A/m; f = 25 kHz; T = 100 °C	$\hat{B}$ = 200 mT; f = 25 kHz; T = 100 °C	$\hat{B}$ = 100 mT; f = 100 kHz; T = 100 °C
3C81	≥320	≤ 3.8	–
3C90	≥320	≤ 2.3	≤ 2.4

COIL FORMERS

General data 12-slots EC52 coil former for insertable pins

PARAMETER	SPECIFICATION
Coil former material	polyamide (PA6.6), glass-reinforced, flame retardant in accordance with *"UL 94V-0"*; UL file number E44716(R)
Maximum operating temperature	130 °C, *"IEC 60085"*, class B

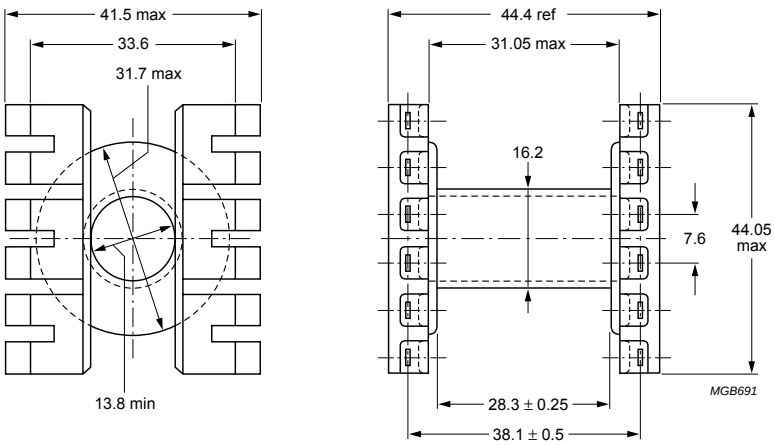

Dimensions in mm.

Fig.2 EC52 coil former; 12-slots.

Winding data and area product for 12-slots EC52 coil former for insertable pins

Coil formers with inserted pins are available on request.

NUMBER OF SECTIONS	MINIMUM WINDING AREA (mm^2)	NOMINAL WINDING WIDTH (mm)	AVERAGE LENGTH OF TURN (mm)	AREA PRODUCT Ae x Aw (mm^4)	TYPE NUMBER
1	212	28.3	74.9	38200	CP-EC52-1S

MOUNTING PARTS

General data and ordering information

ITEM	REMARKS	MOUNT	FIGURE	TYPE NUMBER
Insertable pins	solderability: *"IEC 68-2-20"*, Part 2, Test Ta, method 1 material : copper-zinc alloy (CuZn), tin (Sn) plated	general	3	PIN-EC
		horizontal	4	PIN/H-EC
		vertical	5	PIN/V-EC52
Clamp	copper-zinc alloy (CuZn)		6	CLM/U-EC52
Base plate 4 holes	aluminium		7	BPL4-EC52

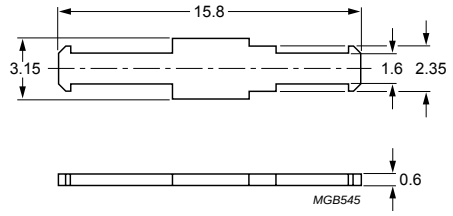

Dimensions in mm.

Fig.3 EC pin; general mount.

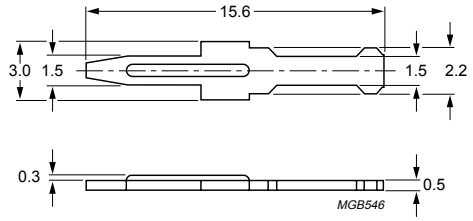

Dimensions in mm.

Fig.4 EC pin; horizontal mount.

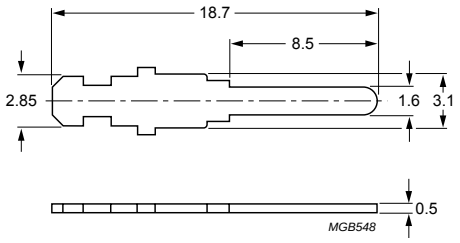

Dimensions in mm.

Fig.5 EC52 pin; vertical mount.

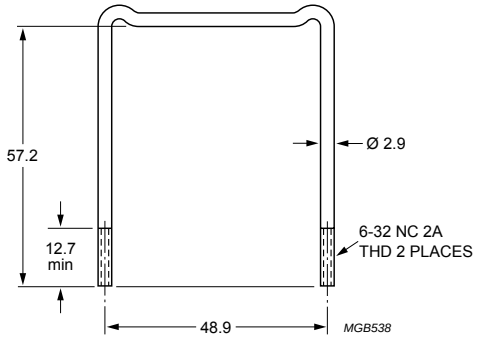

Dimensions in mm.

Fig.6 EC52 clamp.

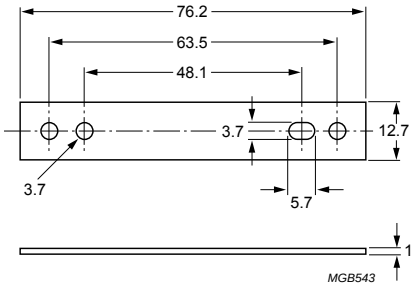

Dimensions in mm.

Fig.7 EC52 base plate; 4 holes.

CORE SETS

Effective core parameters

SYMBOL	PARAMETER	VALUE	UNIT
$\Sigma(l/A)$	core factor (C1)	0.514	mm^{-1}
V_e	effective volume	40 100	mm^3
l_e	effective length	144	mm
A_e	effective area	279	mm^2
A_{min}	minimum area	211	mm^2
m	mass of core half	≈ 127	g

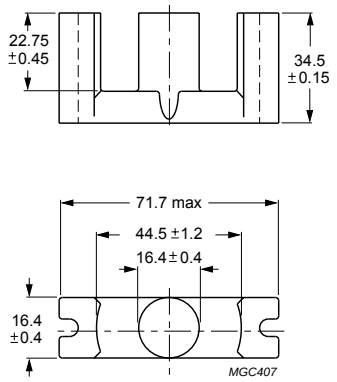

Dimensions in mm.

Fig.1 EC70 core half.

Core halves

A_L measured in combination with an non-gapped core half, unless stated otherwise.

GRADE	A_L (nH)	μ_e	TOTAL AIR GAP (μm)	TYPE NUMBER
3C81 sup	250 ± 3%(1)	≈ 102	≈ 1830	EC70-3C81-E250
	315 ± 3%(1)	≈ 130	≈ 1370	EC70-3C81-E315
	400 ± 3%(1)	≈ 165	≈ 1020	EC70-3C81-E400
	630 ± 5%	≈ 256	≈ 580	EC70-3C81-A630
	1000 ± 10%	≈ 406	≈ 320	EC70-3C81-A1000
	≥ 4000	≥ 1620	≈ 0	EC70-3C81
3C90 sup	250 ± 3%(1)	≈ 102	≈ 1830	EC70-3C90-E250
	315 ± 3%(1)	≈ 130	≈ 1370	EC70-3C90-E315
	400 ± 3%(1)	≈ 165	≈ 1020	EC70-3C90-E400
	630 ± 5%	≈ 256	≈ 580	EC70-3C90-A630
	1000 ± 10%	≈ 406	≈ 320	EC70-3C90-A1000
	3900 ± 25%	≈ 1580	≈ 0	EC70-3C90

Note

1. Measured in combination with an equal gapped core half (symmetrical air gap).

Properties of core sets under power conditions

GRADE	B (mT) at	CORE LOSS (W) at	
	H = 250 A/m; f = 25 kHz; T = 100 °C	f = 25 kHz; $\hat{B}$ = 200 mT; T = 100 °C	f = 100 kHz; $\hat{B}$ = 100 mT; T = 100 °C
3C81	≥330	≤ 8.2	–
3C90	≥330	≤ 4.9	≤ 5.1

COIL FORMERS

General data 8-slots EC70 coil former for insertable pins

PARAMETER	SPECIFICATION
Coil former material	polyamide (PA6.6), glass-reinforced, flame retardant in accordance with *"UL 94V-0"*; UL file number E44716(M)
Maximum operating temperature	130 °C, *"IEC 60085"*, class B

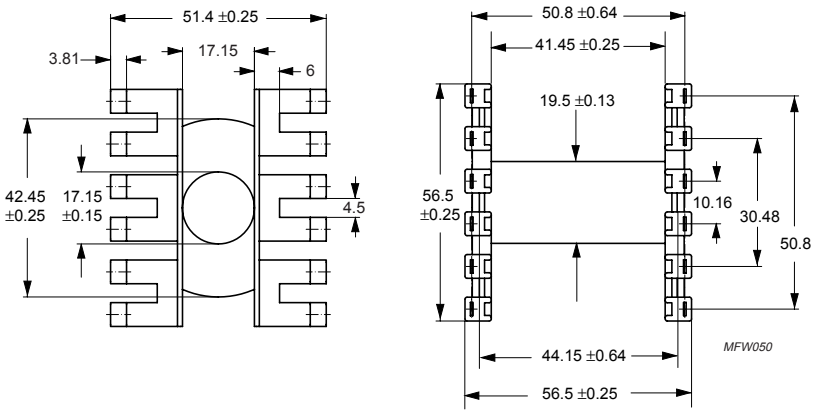

Dimensions in mm.

Fig.2 EC70 coil former; 8-slots.

Winding data and area product for 8-slots EC70 coil former for insertable pins; see note 1

NUMBER OF SECTIONS	MINIMUM WINDING AREA (mm^2)	NOMINAL WINDING WIDTH (mm)	AVERAGE LENGTH OF TURN (mm)	AREA PRODUCT Ae x Aw (mm^4)	TYPE NUMBER
1	465	41.5	97.3	130000	CP-EC70-1S

Note

1. Coil formers with inserted pins are available on request.

MOUNTING PARTS

General data and ordering information

ITEM	REMARKS	MOUNT	FIGURE	TYPE NUMBER
Insertable pins	solderability: *"IEC 68-2-20"*, Part 2, Test Ta, method 1 material : copper-zinc alloy (CuZn), tin (Sn) plated	general	3	PIN-EC
		horizontal	4	PIN/H-EC
		vertical	5	PIN/V-EC70
Clamp	copper-zinc alloy (CuZn)		6	CLM/U-EC70
Base plate 4 holes	aluminium		7	BPL4-EC70

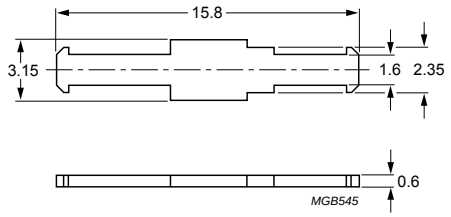

Dimensions in mm.

Fig.3 EC pin; general mount.

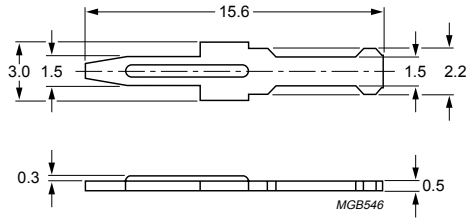

Dimensions in mm.

Fig.4 EC pin; horizontal mount.

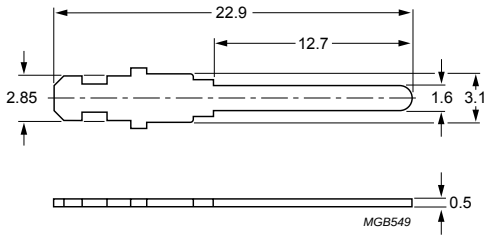

Dimensions in mm.

Fig.5 EC70 pin; vertical mount.

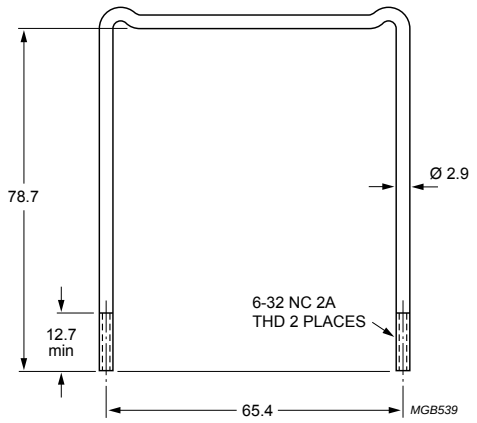

Dimensions in mm.

Fig.6 EC70 clamp.

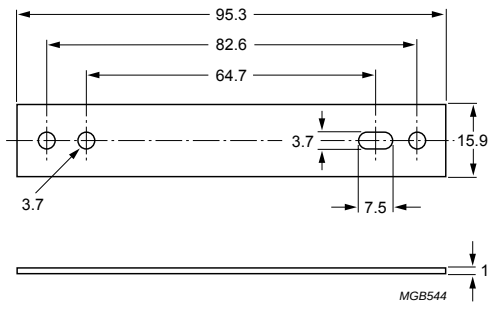

Dimensions in mm.

Fig.7 EC70 base plate; 4-holes.

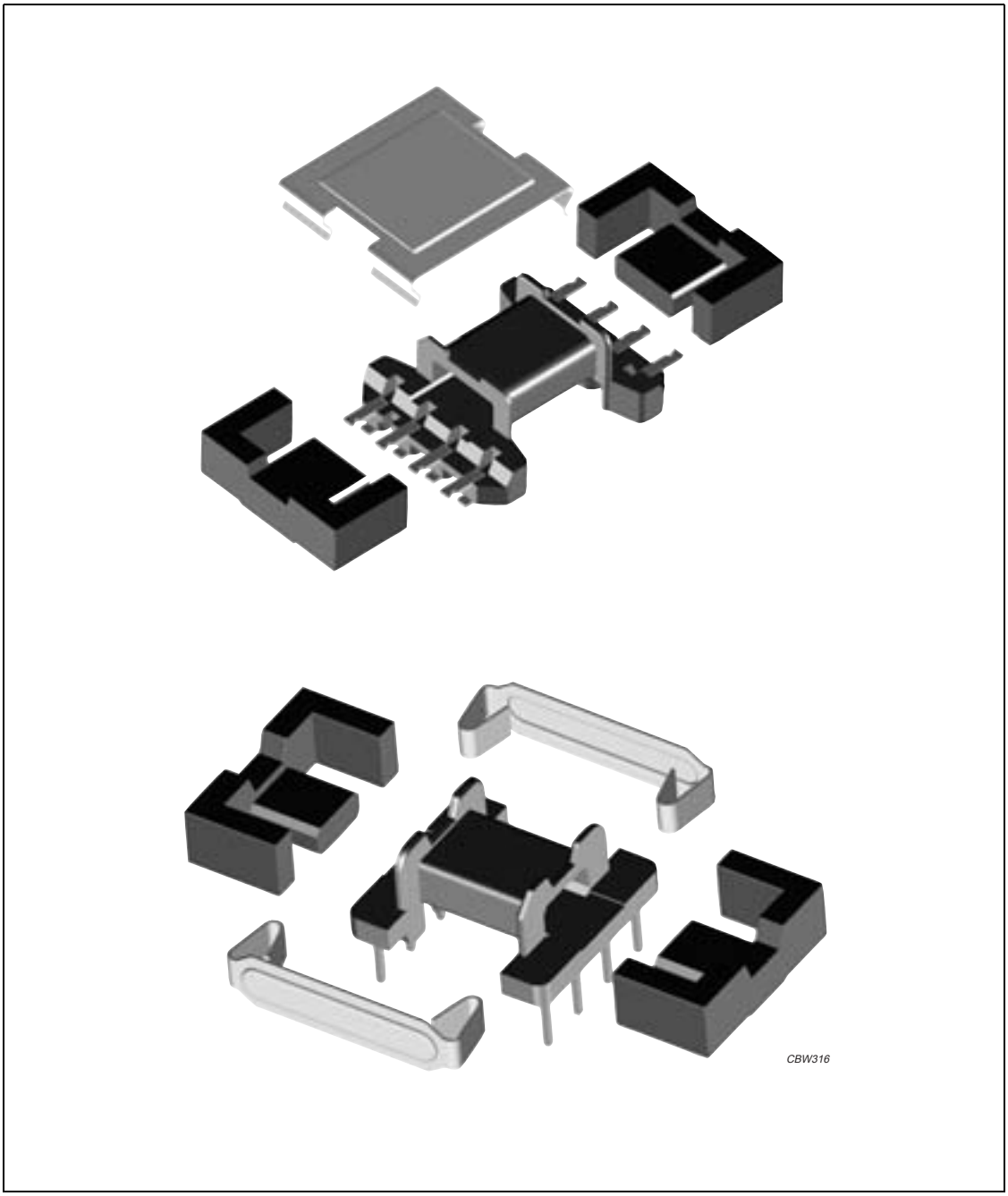
CBW316

PRODUCT OVERVIEW AND TYPE NUMBER STRUCTURE

Product overview EFD cores

CORE TYPE	V_e (mm^3)	A_e (mm^2)	MASS (g)
EFD10/5/3	171	7.2	0.45
EFD12/6/3.5	325	11.4	0.9
EFD15/8/5	510	15.0	1.4
EFD20/10/7	1460	31.0	3.5
EFD25/13/9	3300	58.0	8
EFD30/15/9	4700	69.0	12

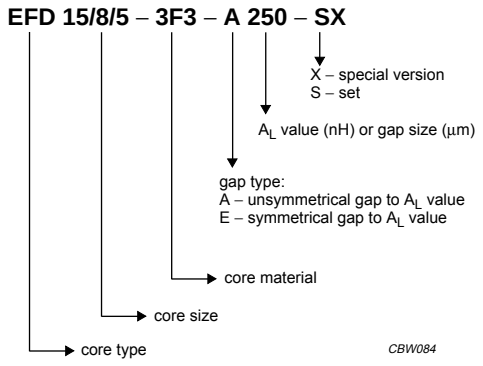

Fig.1 Type number structure for cores.

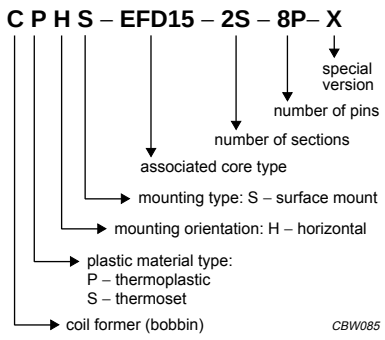

Fig.2 Type number structure for coil formers.

CORES

Effective core parameters

SYMBOL	PARAMETER	VALUE	UNIT
$\Sigma(l/A)$	core factor (C1)	3.29	mm^{-1}
V_e	effective volume	171	mm^3
l_e	effective length	23.7	mm
A_e	effective area	7.2	mm^2
A_{min}	minimum area	6.5	mm^2
m	mass of core half	≈ 0.45	g

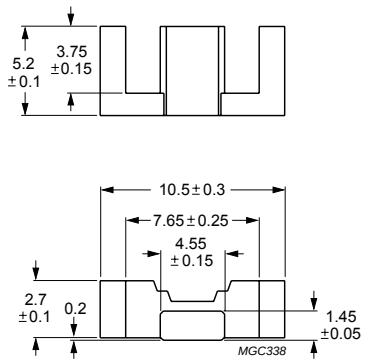

Dimensions in mm.

Fig.1 EFD10/5/3 core half.

Core sets

Clamping force for A_L measurements, 10 ± 5 N.

GRADE	A_L (nH)	μ_e	AIR GAP (μm)	TYPE NUMBER
3C90	25 ±5%	≈ 66	≈ 610	EFD10/5/3-3C90-A25-S
	40 ±8%	≈ 105	≈ 310	EFD10/5/3-3C90-A40-S
	63 ±10%	≈ 165	≈ 170	EFD10/5/3-3C90-A63-S
	585 ±25%	≈ 1510	≈ 0	EFD10/5/3-3C90-S
3C94	25 ±5%	≈ 66	≈ 610	EFD10/5/3-3C94-A25-S
	40 ±8%	≈ 105	≈ 310	EFD10/5/3-3C94-A40-S
	63 ±10%	≈ 165	≈ 170	EFD10/5/3-3C94-A63-S
	585 ±25%	≈ 1510	≈ 0	EFD10/5/3-3C94-S
3C96 des	525 ±25%	≈ 1360	≈ 0	EFD10/5/3-3C96-S
3F3	25 ±5%	≈ 66	≈ 610	EFD10/5/3-3F3-A25-S
	40 ±8%	≈ 105	≈ 310	EFD10/5/3-3F3-A40-S
	63 ±10%	≈ 165	≈ 170	EFD10/5/3-3F3-A63-S
	500 ±25%	≈ 1290	≈ 0	EFD10/5/3-3F3-S
3F35 des	400 ±25%	≈ 1030	≈ 0	EFD10/5/3-3F35-S
3F4 des	25 ±5%	≈ 66	≈ 570	EFD10/5/3-3F4-A25-S
	40 ±8%	≈ 105	≈ 280	EFD10/5/3-3F4-A40-S
	63 ±10%	≈ 165	≈ 150	EFD10/5/3-3F4-A63-S
	280 ±25%	≈ 730	≈ 0	EFD10/5/3-3F4-S
3F45 prot	280 ±25%	≈ 730	≈ 0	EFD10/5/3-3F45-S

Properties of core sets under power conditions

GRADE	B (mT) at	CORE LOSS (W) at			
	H = 250 A/m; f = 25 kHz; T = 100 °C	f = 100 kHz; $\hat{B}$ = 100 mT; T = 100 °C	f = 100 kHz; $\hat{B}$ = 200 mT; T = 100 °C	f = 400 kHz; $\hat{B}$ = 50 mT; T = 100 °C	f = 500 kHz; $\hat{B}$ = 50 mT; T = 100 °C
3C90	≥320	≤ 0.019	–	–	–
3C94	≥320	≤ 0.015	≤ 0.09	–	–
3C96	≥340	≤ 0.01	≤ 0.07	≤ 0.03	≤ 0.06
3F35	≥300	–	–	≤ 0.015	≤ 0.03
3F3	≥315	≤ 0.020	–	≤ 0.035	–
3F4	≥250	–	–	–	–

Properties of core sets under power conditions (continued)

GRADE	B (mT) at	CORE LOSS (W) at			
	H = 250 A/m; f = 25 kHz; T = 100 °C	f = 500 kHz; $\hat{B}$ = 100 mT; T = 100 °C	f = 1 MHz; $\hat{B}$ = 30 mT; T = 100 °C	f = 1 MHz; $\hat{B}$ = 50 mT; T = 100 °C	f = 3 MHz; $\hat{B}$ = 10 mT; T = 100 °C
3C90	≥320	–	–	–	–
3C94	≥320	–	–	–	–
3C96	≥320	–	–	–	–
3F35	≥300	≤ 0.2	–	–	–
3F3	≥315	–	–	–	–
3F4	≥250	–	≤ 0.05	–	≤ 0.08
3F45	≥250	–	≤ 0.04	≤ 0.15	≤ 0.065

COIL FORMERS

General data

PARAMETER	SPECIFICATION
Coil former material	liquid crystal polymer (LCP), glass reinforced, flame retardant in accordance with *"UL 94V-0"*; UL file number E54705(M)
Solder pad material	copper-tin alloy (CuSn), tin (Sn) plated
Maximum operating temperature	155 °C, *"IEC 60085"*, class F
Resistance to soldering heat	*"IEC 60068-2-20"*, Part 2, Test Tb, method 1B: 350 °C, 3.5 s
Solderability	*"IEC 60068-2-20"*, Part 2, Test Ta, method 1: 235 °C, 2 s

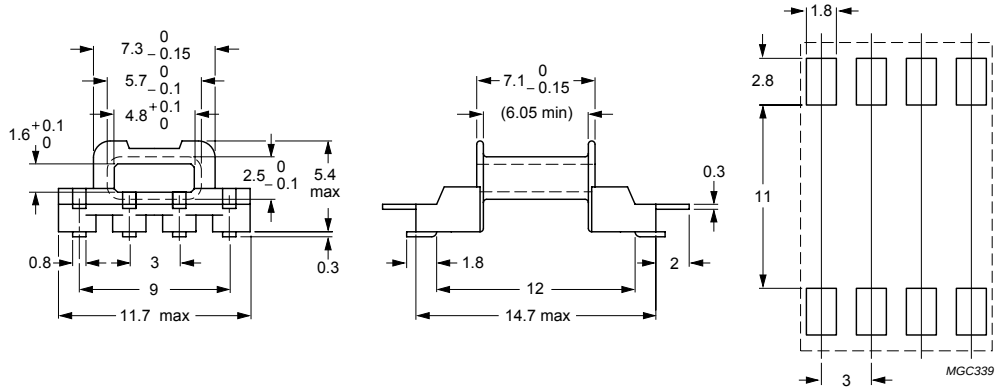

Dimensions in mm.

Fig.2 EFD10/5/3 coil former (SMD); 8-solder pads.

Winding data and area product for EFD10/5/3 coil former (SMD) with 8-solder pads

NUMBER OF SECTIONS	NUMBER OF SOLDER PADS	MINIMUM WINDING AREA (mm^2)	MINIMUM WINDING WIDTH (mm)	AVERAGE LENGTH OF TURN (mm)	AREA PRODUCT Ae x Aw (mm^4)	TYPE NUMBER
1	8	4.2	6.05	14.8	30.24	CPHS-EFD10-1S-8P

MOUNTING PARTS

General data

ITEM	REMARKS	FIGURE	TYPE NUMBER
Clamp	stainless steel (CrNi); clamping force ≈15 N	3	CLM-EFD10

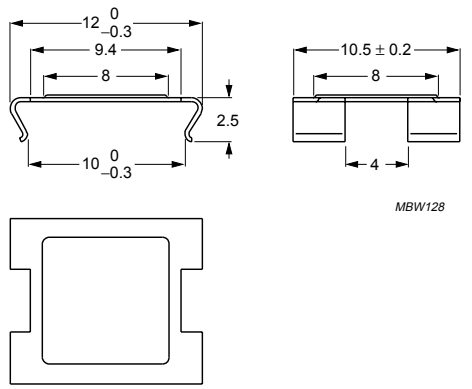

Dimensions in mm.

Fig.3 EFD10/5/3 mounting clamp.

CORES

Effective core parameters

SYMBOL	PARAMETER	VALUE	UNIT
$\Sigma(l/A)$	core factor (C1)	2.50	mm^{-1}
V_e	effective volume	325	mm^3
l_e	effective length	28.5	mm
A_e	effective area	11.4	mm^2
A_{min}	minimum area	10.7	mm^2
m	mass of core half	≈ 0.9	g

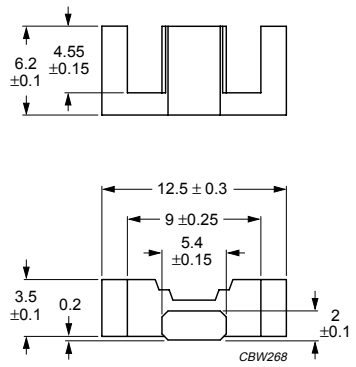

Dimensions in mm.

Fig.1 EFD12/6/3.5 core half.

Core sets

Clamping force for A_L measurements, 15 ±5 N.

GRADE	A_L (nH)	μ_e	AIR GAP (μm)	TYPE NUMBER
3C90	40 ±5%	≈ 80	≈ 540	EFD12/6/3.5-3C90-A40-S
	63 ±8%	≈ 125	≈ 290	EFD12/6/3.5-3C90-A63-S
	100 ±10%	≈ 200	≈ 160	EFD12/6/3.5-3C90-A100-S
	825 ±25%	≈ 1610	≈ 0	EFD12/6/3.5-3C90-S
3C94	40 ±5%	≈ 80	≈ 540	EFD12/6/3.5-3C94-A40-S
	63 ±8%	≈ 125	≈ 290	EFD12/6/3.5-3C94-A63-S
	100 ±10%	≈ 200	≈ 160	EFD12/6/3.5-3C94-A100-S
	825 ±25%	≈ 1610	≈ 0	EFD12/6/3.5-3C94-S
3C96 des	750 ±25%	≈ 1460	≈ 0	EFD12/6/3.5-3C96-S
3F3	40 ±5%	≈ 80	≈ 540	EFD12/6/3.5-3F3-A40-S
	63 ±8%	≈ 125	≈ 290	EFD12/6/3.5-3F3-A63-S
	100 ±10%	≈ 200	≈ 160	EFD12/6/3.5-3F3-A100-S
	700 ±25%	≈ 1370	≈ 0	EFD12/6/3.5-3F3-S
3F35 des	550 ±25%	≈ 1070	≈ 0	EFD12/6/3.5-3F35-S
3F4 des	40 ±5%	≈ 80	≈ 500	EFD12/6/3.5-3F4-A40-S
	63 ±8%	≈ 125	≈ 260	EFD12/6/3.5-3F4-A63-S
	100 ±10%	≈ 200	≈ 130	EFD12/6/3.5-3F4-A100-S
	380 ±25%	≈ 730	≈ 0	EFD12/6/3.5-3F4-S
3F45 prot	380 ±25%	≈ 730	≈ 0	EFD12/6/3.5-3F45-S

Properties of core sets under power conditions

GRADE	B (mT) at	CORE LOSS (W) at			
	H = 250 A/m; f = 25 kHz; T = 100 °C	f = 100 kHz; $\hat{B}$ = 100 mT; T = 100 °C	f = 100 kHz; $\hat{B}$ = 200 mT; T = 100 °C	f = 400 kHz; $\hat{B}$ = 50 mT; T = 100 °C	f = 500 kHz; $\hat{B}$ = 50 mT; T = 100 °C
3C90	≥320	≤ 0.036	–	–	–
3C94	≥320	≤ 0.029	≤ 0.2	–	–
3C96	≥340	≤ 0.022	≤ 0.15	≤ 0.06	≤ 0.12
3F35	≥300	–	–	≤ 0.03	≤ 0.045
3F3	≥315	≤ 0.04	–	≤ 0.065	–
3F4	≥250		–	–	–

Properties of core sets under power conditions (continued)

GRADE	B (mT) at	CORE LOSS (W) at			
	H = 250 A/m; f = 25 kHz; T = 100 °C	f = 500 kHz; $\hat{B}$ = 100 mT; T = 100 °C	f = 1 MHz; $\hat{B}$ = 30 mT; T = 100 °C	f = 1 MHz; $\hat{B}$ = 50 mT; T = 100 °C	f = 3 MHz; $\hat{B}$ = 10 mT; T = 100 °C
3C90	≥320	–	–	–	–
3C94	≥320	–	–	–	–
3C96	≥340	–	–	–	–
3F35	≥300	≤ 0.35	–	–	–
3F3	≥315	–	–	–	–
3F4	≥250	–	≤ 0.095	–	≤ 0.15
3F45	≥250	–	≤ 0.075	≤ 0.28	≤ 0.12

COIL FORMERS

General data

ITEM	SPECIFICATION
Coil former material	liquid crystal polymer (LCP), glass reinforced, flame retardant in accordance with *"UL 94V-0"*; UL file number E83005(M)
Solder pad material	copper-tin alloy (CuSn), tin (Sn) plated
Maximum operating temperature	155 °C, *"IEC 60085"*, class F
Resistance to soldering heat	*"IEC 60068-2-20"*, Part 2, Test Tb, method 1B, 350 °C, 3.5 s
Solderability	*"IEC 60068-2-20"*, Part 2, Test Ta, method 1: 235 °C, 2 s

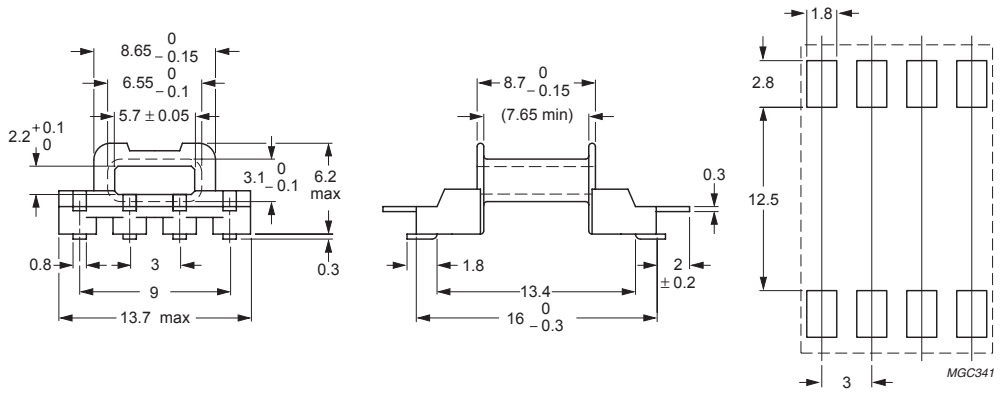

Dimensions in mm.

Fig.2 EFD12/6/3.5 coil former (SMD); 8-solder pads.

Winding data and area product for EFD12/6/3.5 coil former (SMD) with 8-solder pads

NUMBER OF SECTIONS	NUMBER OF SOLDER PADS	MINIMUM WINDING AREA (mm^2)	MINIMUM WINDING WIDTH (mm)	AVERAGE LENGTH OF TURN (mm)	AREA PRODUCT Ae x Aw (mm^4)	TYPE NUMBER
1	8	6.5	7.65	18.6	74.1	CPHS-EFD12-1S-8P-Z

MOUNTING PARTS

General data

ITEM	REMARKS	FIGURE	TYPE NUMBER
Clamp	stainless steel (CrNi); clamping force ≈20 N	3	CLM-EFD12

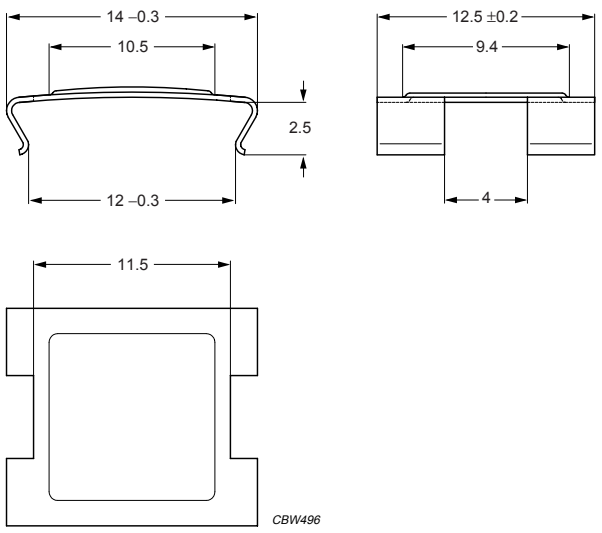

Dimensions in mm.

Fig.3 EFD12/6/3.5 mounting clamp.

CORES

Effective core parameters

SYMBOL	PARAMETER	VALUE	UNIT
Σ(l/A)	core factor (C1)	2.27	mm^{-1}
V_e	effective volume	510	mm^3
l_e	effective length	34.0	mm
A_e	effective area	15.0	mm^2
A_{min}	minimum area	12.2	mm^2
m	mass of core half	≈ 1.4	g

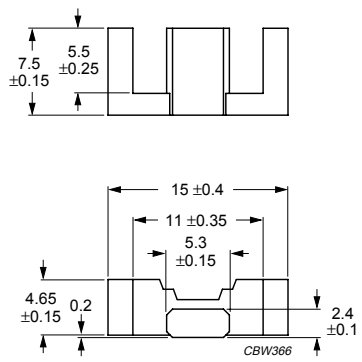

Dimensions in mm.

Fig.1 EFD15/8/5 core half.

Core sets

Clamping force for A_L measurements, 20 ±5 N.

GRADE	A_L (nH)	μ_e	AIR GAP (μm)	TYPE NUMBER
3C90	63 ±5%	≈ 115	≈ 400	EFD15/8/5-3C90-A63-S
	100 ±8%	≈ 180	≈ 220	EFD15/8/5-3C90-A100-S
	160 ±10%	≈ 290	≈ 120	EFD15/8/5-3C90-A160-S
	950 ±25%	≈ 1700	≈ 0	EFD15/8/5-3C90-S
3C94	63 ±5%	≈ 115	≈ 400	EFD15/8/5-3C94-A63-S
	100 ±8%	≈ 180	≈ 220	EFD15/8/5-3C94-A100-S
	160 ±10%	≈ 290	≈ 120	EFD15/8/5-3C94-A160-S
	950 ±25%	≈ 1700	≈ 0	EFD15/8/5-3C94-S
3C95 des	1140 ±25%	≈ 2070	≈ 0	EFD15/8/5-3C95-S
3C96 des	850 ±25%	≈ 1520	≈ 0	EFD15/8/5-3C96-S
3F3	63 ±5%	≈ 115	≈ 400	EFD15/8/5-3F3-A63-S
	100 ±8%	≈ 180	≈ 220	EFD15/8/5-3F3-A100-S
	160 ±10%	≈ 290	≈ 120	EFD15/8/5-3F3-A160-S
	780 ±25%	≈ 1400	≈ 0	EFD15/8/5-3F3-S
3F35 des	630 ±25%	≈ 1130	≈ 0	EFD15/8/5-3F35-S
3F4 des	63 ±5%	≈ 115	≈ 360	EFD15/8/5-3F4-A63-S
	100 ±8%	≈ 180	≈ 190	EFD15/8/5-3F4-A100-S
	160 ±10%	≈ 290	≈ 90	EFD15/8/5-3F4-A160-S
	400 ±25%	≈ 720	≈ 0	EFD15/8/5-3F4-S
3F45 prot	400 ±25%	≈ 720	≈ 0	EFD15/8/5-3F45-S

Properties of core sets under power conditions

GRADE	B (mT) at	CORE LOSS (W) at				
	H = 250 A/m; f = 25 kHz; T = 100 °C	f = 100 kHz; $\hat{B}$ = 100 mT; T = 100 °C	f = 100 kHz; $\hat{B}$ = 200 mT; T = 25 °C	f = 100 kHz; $\hat{B}$ = 200 mT; T = 100 °C	f = 400 kHz; $\hat{B}$ = 50 mT; T = 100 °C	f = 500 kHz; $\hat{B}$ = 50 mT; T = 100 °C
3C90	≥320	≤ 0.057	–	–	–	–
3C94	≥320	≤ 0.045	–	≤ 0.28	–	–
3C95	≥320	–	≤ 0.28	≤ 0.27	–	–
3C96	≥340	≤ 0.035	–	≤ 0.22	≤ 0.09	≤ 0.19
3F35	≥300	–	–	–	≤ 0.05	≤ 0.06
3F3	≥315	≤ 0.06	–	–	≤ 0.1	–
3F4	≥250		–	–	–	–

Properties of core sets under power conditions (continued)

GRADE	B (mT) at	CORE LOSS (W) at			
	H = 250 A/m; f = 25 kHz; T = 100 °C	f = 500 kHz; $\hat{B}$ = 100 mT; T = 100 °C	f = 1 MHz; $\hat{B}$ = 30 mT; T = 100 °C	f = 1 MHz; $\hat{B}$ = 50 mT; T = 100 °C	f = 3 MHz; $\hat{B}$ = 10 mT; T = 100 °C
3C90	≥320	–	–	–	–
3C94	≥320	–	–	–	–
3C95	≥320	–	–	–	–
3C96	≥340	–	–	–	–
3F35	≥300	≤ 0.5	–	–	–
3F3	≥315	–	–	–	–
3F4	≥250	–	≤ 0.15	–	≤ 0.24
3F45	≥250	–	≤ 0.12	≤ 0.45	≤ 0.2

COIL FORMERS

General data

PARAMETER	SPECIFICATION
Coil former material	phenolformaldehyde (PF), glass reinforced, flame retardant in accordance with *"UL 94V-0"*; UL file number E167521(M)
Pin material	copper-tin alloy (CuSn), Ni flash, tin (Sn) plated, see note 1
Maximum operating temperature	180 °C, *"IEC 60085"*, class H
Resistance to soldering heat	*"IEC 60068-2-20"*, Part 2, Test Tb, method 1B, 350 °C, 3.5 s
Solderability	*"IEC 60068-2-20"*, Part 2, Test Ta, method 1: 235 °C, 2 s

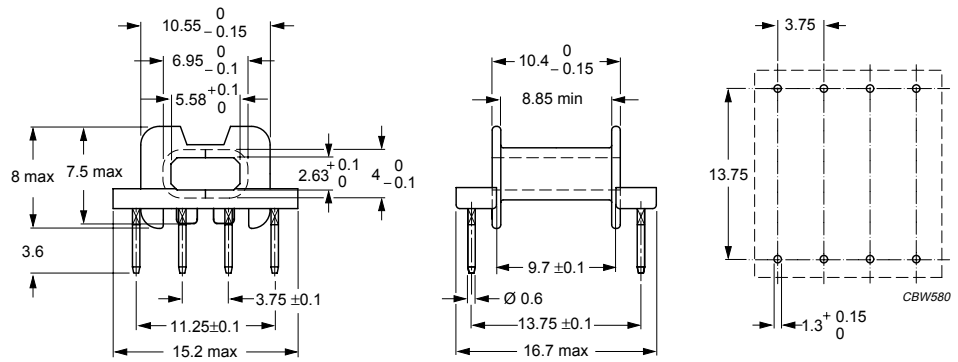

Dimensions in mm.

Fig.2 EFD15/8/5 coil former; 8-pins.

Winding data and area product for EFD15/8/5 coil former with 8-pins

NUMBER OF SECTIONS	WINDING AREA (mm^2)	MINIMUM WINDING WIDTH (mm)	AVERAGE LENGTH OF TURN (mm)	AREA PRODUCT Ae x Aw (mm^4)	TYPE NUMBER
1	14.8	8.85	26.3	222	CSH-EFD15-1S-8P(1)

Note

1. Also available with post-inserted pins.

COIL FORMERS

General data

PARAMETER	SPECIFICATION
Coil former material	liquid crystal polymer (LCP), glass reinforced, flame retardant in accordance with *"UL 94V-0"*; UL file number E54705(M)
Pin material	copper-tin alloy (CuSn), nickel flash, tin (Sn) plated
Maximum operating temperature	155 °C, *"IEC 60085"*, class F
Resistance to soldering heat	*"IEC 60068-2-20"*, Part 2, Test Tb, method 1B, 350 °C, 3.5 s
Solderability	*"IEC 60068-2-20"*, Part 2, Test Ta, method 1: 235 °C, 2 s

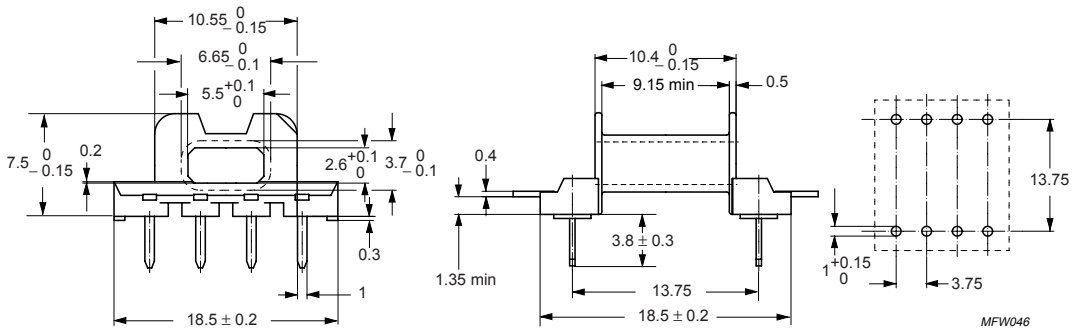

Dimensions in mm.

Fig.3 EFD15/8/5 coil former; 8-pins.

Winding data and area product for EFD15/8/5 coil former (PCB) with 8-pins

NUMBER OF SECTIONS	WINDING AREA (mm^2)	MINIMUM WINDING WIDTH (mm)	AVERAGE LENGTH OF TURN (mm)	AREA PRODUCT Ae x Aw (mm^4)	TYPE NUMBER
1	16.7	9.15	25.6	251	CPH-EFD15-1S-8PD-Z

COIL FORMERS

General data

PARAMETER	SPECIFICATION
Coil former material	liquid crystal polymer (LCP), glass reinforced, flame retardant in accordance with *"UL 94V-0"*; UL file number E54705 (M)
Solder pad material	copper-tin alloy (CuSn), tin (Sn) plated
Maximum operating temperature	155 °C, *"IEC 60085"*, class F
Resistance to soldering heat	*"IEC 60068-2-20"*, Part 2, Test Tb, method 1B, 350 °C, 3.5 s
Solderability	*"IEC 60068-2-20"*, Part 2, Test Ta, method 1: 235 °C, 2 s

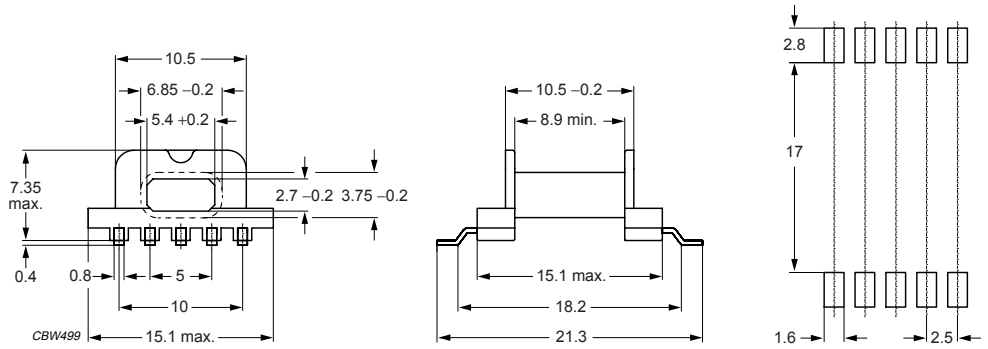

Dimensions in mm.

Fig.4 EFD15/8/5 coil former (SMD); 10-solder pads.

Winding data and area product for EFD15/8/5 coil former (SMD)

NUMBER OF SECTIONS	NUMBER OF SOLDER PADS	WINDING AREA (mm^2)	MINIMUM WINDING WIDTH (mm)	AVERAGE LENGTH OF TURN (mm)	AREA PRODUCT Ae x Aw (mm^4)	TYPE NUMBER
1	10	16.0	8.9	26	240	CPHS-EFD15-1S-10P

COIL FORMERS

General data

PARAMETER	SPECIFICATION
Coil former material	phenolformaldehyde (PF), glass reinforced, flame retardant in accordance with *"UL 94V-0"*; UL file number E41429 (M)
Pin material	copper-tin alloy (CuSn), tin (Sn) plated
Maximum operating temperature	180 °C, *"IEC 60085"*, class H
Resistance to soldering heat	*"IEC 60068-2-20"*, Part 2, Test Tb, method 1B, 350 °C, 3.5 s
Solderability	*"IEC 60068-2-20"*, Part 2, Test Ta, method 1: 235 °C, 2 s

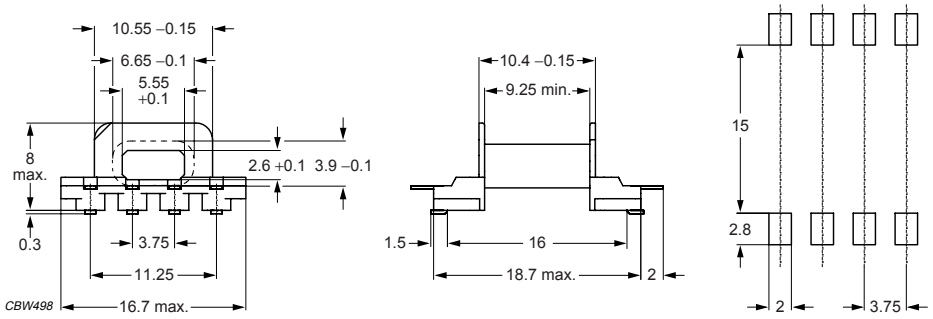

Dimensions in mm.

Fig.5 EFD15/8/5 coil former (SMD).

Winding data and area product for EFD15/8/5 (SMD) coil former

NUMBER OF SECTIONS	WINDING AREA (mm^2)	MINIMUM WINDING WIDTH (mm)	AVERAGE LENGTH OF TURN (mm)	AREA PRODUCT Ae x Aw (mm^4)	TYPE NUMBER
1	16.7	9.25	24.1	251	CSHS-EFD15-1S-8P-Z

MOUNTING PARTS

General data

ITEM	REMARKS	FIGURE	TYPE NUMBER
Clamp	stainless steel (CrNi); clamping force ≈25 N	6	CLM-EFD15
Clip	stainless steel (CrNi); clamping force ≈12.5 N	7	CLI-EFD15

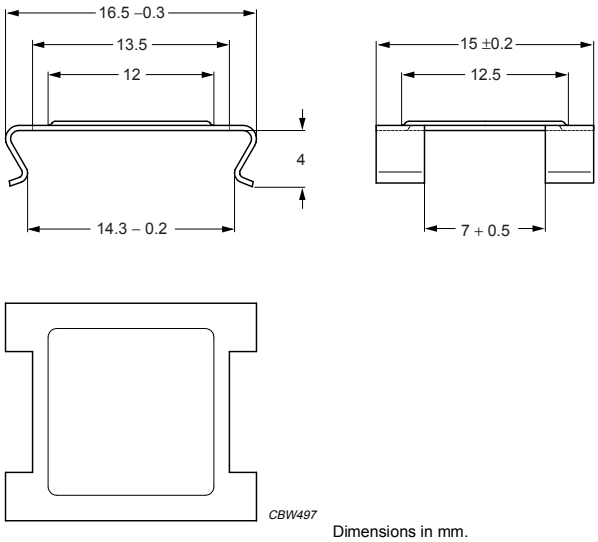

Dimensions in mm.

Fig.6 Clamp: CLM-EFD15.

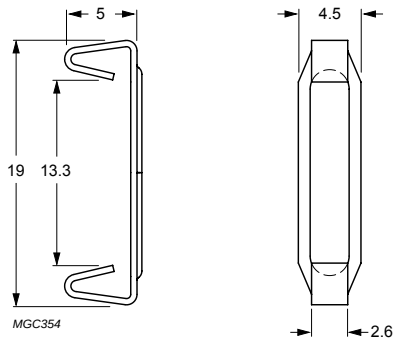

Dimensions in mm.

Fig.7 Clip: CLI-EFD15.

CORES

Effective core parameters

SYMBOL	PARAMETER	VALUE	UNIT
Σ(l/A)	core factor (C1)	1.52	mm^{-1}
V_e	effective volume	1460	mm^3
l_e	effective length	47.0	mm
A_e	effective area	31.0	mm^2
A_{min}	minimum area	29	mm^2
m	mass of core half	≈ 3.5	g

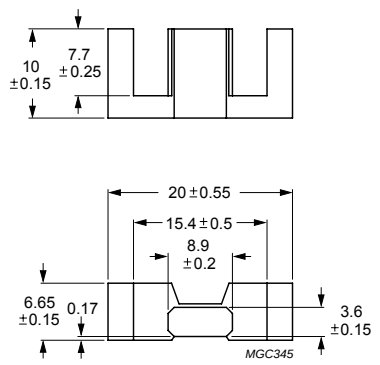

Dimensions in mm.

Fig.1 EFD20/10/7 core half.

Core halves

A_L measured in combination with a non-gapped core half, clamping force for A_L measurements 20 ±10 N, unless stated otherwise.

GRADE	A_L (nH)	μ_e	TOTAL AIR GAP (μm)	TYPE NUMBER
3C90	63 ±3%(1)	≈ 76	≈ 960	EFD20/10/7-3C90-E63
	100 ±3%	≈ 121	≈ 510	EFD20/10/7-3C90-A100
	160 ±5%	≈ 193	≈ 280	EFD20/10/7-3C90-A160
	250 ±8%	≈ 302	≈ 160	EFD20/10/7-3C90-A250
	315 ±10%	≈ 380	≈ 120	EFD20/10/7-3C90-A315
	1300 ±25%	≈ 1570	≈ 0	EFD20/10/7-3C90
3C94	63 ±3%(1)	≈ 76	≈ 960	EFD20/10/7-3C94-E63
	100 ±3%	≈ 121	≈ 510	EFD20/10/7-3C94-A100
	160 ±5%	≈ 193	≈ 280	EFD20/10/7-3C94-A160
	250 ±8%	≈ 302	≈ 160	EFD20/10/7-3C94-A250
	315 ±10%	≈ 380	≈ 120	EFD20/10/7-3C94-A315
	1300 ±25%	≈ 1570	≈ 0	EFD20/10/7-3C94
3C95 des	1540 ±25%	≈ 1865	≈ 0	EFD20/10/7-3C95
3C96 des	1200 ±25%	≈ 1450	≈ 0	EFD20/10/7-3C96
3F3	63 ±3%(1)	≈ 76	≈ 960	EFD20/10/7-3F3-E63
	100 ±3%	≈ 121	≈ 510	EFD20/10/7-3F3-A100
	160 ±5%	≈ 193	≈ 280	EFD20/10/7-3F3-A160
	250 ±8%	≈ 302	≈ 160	EFD20/10/7-3F3-A250
	315 ±10%	≈ 380	≈ 120	EFD20/10/7-3F3-A315
	1200 ±25%	≈ 1450	≈ 0	EFD20/10/7-3F3

GRADE	A_L (nH)	μ_e	TOTAL AIR GAP (μm)	TYPE NUMBER
3F35 des	920 ±25%	≈ 1110	≈ 0	EFD20/10/7-3F35
3F4 des	63 ±3%[1]	≈ 76	≈ 900	EFD20/10/7-3F4-E63
	100 ±3%	≈ 121	≈ 450	EFD20/10/7-3F4-A100
	160 ±5%	≈ 193	≈ 230	EFD20/10/7-3F4-A160
	250 ±8%	≈ 302	≈ 120	EFD20/10/7-3F4-A250
	315 ±10%	≈ 380	≈ 80	EFD20/10/7-3F4-A315
	650 ±25%	≈ 780	≈ 0	EFD20/10/7-3F4
3F45 prot	650 ±25%	≈ 780	≈ 0	EFD20/10/7-3F45

Note

1. Measured in combination with an equal gapped core half, clamping force for A_L measurements, 20 ±10 N.

Properties of core sets under power conditions

GRADE	B (mT) at	CORE LOSS (W) at				
	H = 250 A/m;f = 25 kHz; T = 100 °C	f = 25 kHz; $\hat{B}$ = 200 mT; T = 100 °C	f = 100 kHz; $\hat{B}$ = 100 mT; T = 100 °C	f = 100 kHz; $\hat{B}$ = 200 mT; T = 25 °C	f = 100 kHz; $\hat{B}$ = 200 mT; T = 100 °C	f = 400 kHz; $\hat{B}$ = 50 mT; T = 100 °C
3C90	≥330	≤ 0.16	≤ 0.17	–	–	–
3C94	≥330	–	≤ 0.13	–	≤ 0.8	–
3C95	≥330	–	–	≤ 0.86	≤ 0.82	–
3C96	≥330	–	≤ 0.1	–	≤ 0.6	≤ 0.26
3F35	≥300	–	–	–	–	≤ 0.13
3F3	≥315	–	≤ 0.17	–	–	≤ 0.28
3F4	≥300	–	–	–	–	–

Properties of core sets under power conditions (continued)

GRADE	B (mT) at	CORE LOSS (W) at				
	H = 250 A/m; f = 25 kHz; T = 100 °C	f = 500 kHz; $\hat{B}$ = 50 mT; T = 100 °C	f = 500 kHz; $\hat{B}$ = 100 mT; T = 100 °C	f = 1 MHz; $\hat{B}$ = 30 mT; T = 100 °C	f = 1 MHz; $\hat{B}$ = 50 mT; T = 100 °C	f = 3 MHz; $\hat{B}$ = 10 mT; T = 100 °C
3C90	≥330	–	–	–	–	–
3C94	≥330	–	–	–	–	–
3C95	≥330	–	–	–	–	–
3C96	≥330	≤ 0.5	–	–	–	–
3F35	≥300	≤ 0.2	≤ 1.5	–	–	–
3F3	≥315	–	–	–	–	–
3F4	≥300	–	–	≤ 0.43	–	≤ 0.7
3F45	≥300	–	–	≤ 0.34	≤ 1.25	≤ 0.55

COIL FORMERS

General data

PARAMETER	SPECIFICATION
Coil former material	phenolformaldehyde (PF), glass-reinforced, flame retardant in accordance with *"UL94 V-0"*; UL file number E167521(M)
Pin material	copper-tin alloy (CuSn), Ni flash, tin (Sn) plated, see note 1
Maximum operating temperature	180 °C, *"IEC 60085"*, class H
Resistance to soldering heat	*"IEC 60068-2-20"*, Part 2, Test Tb, method 1B, 350 °C, 3.5 s
Solderability	*"IEC 60068-2-20"*, Part 2, Test Ta, method 1: 235 °C, 2 s

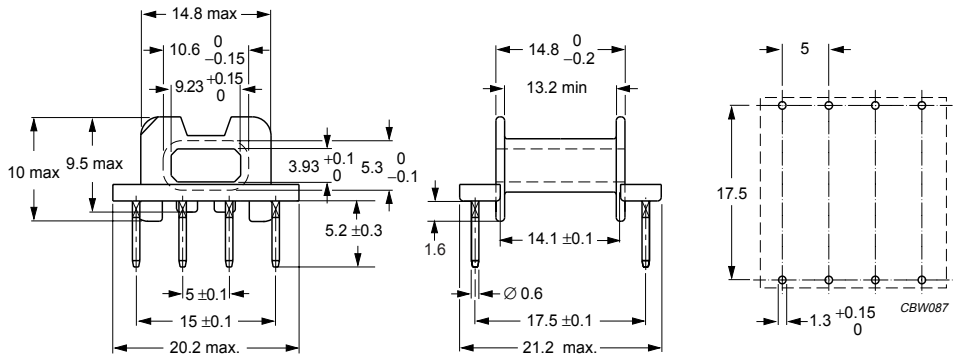

Dimensions in mm.

Fig.2 EFD20/10/7 coil former; 8-pins.

Winding data and area product for EFD20 coil former with 8-pins

NUMBER OF SECTIONS	WINDING AREA (mm^2)	MINIMUM WINDING WIDTH (mm)	AVERAGE LENGTH OF TURN (mm)	AREA PRODUCT Ae x Aw (mm^4)	TYPE NUMBER
1	26.4	13.2	36.5	818	CSH-EFD20-1S-8P[1]

Note

1. Also available with post-inserted pins.

COIL FORMERS

General data

PARAMETER	SPECIFICATION
Coil former material	liquid crystal polymer (LCP), glass reinforced, flame retardant in accordance with *"UL94 V-0"*; UL file number E54705 (M)
Pin material	copper-tin alloy (CuSn), Ni flash, tin (Sn) plated
Maximum operating temperature	155 °C, *"IEC 60085"*, class F
Resistance to soldering heat	*"IEC 60068-2-20"*, Part 2, Test Tb, method 1B, 350 °C, 3.5 s
Solderability	*"IEC 60068-2-20"*, Part 2, Test Ta, method 1: 235 °C, 2 s

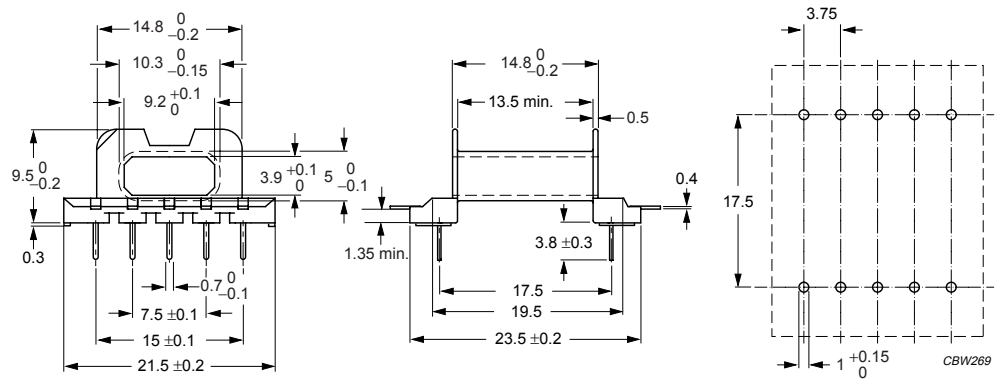

Dimensions in mm.

Fig.3 EFD20/10/7 coil former (PCB); 10-pins.

Winding data and area product for EFD20/10/7 coil former (PCB) with 10-pins

NUMBER OF SECTIONS	WINDING AREA (mm^2)	MINIMUM WINDING WIDTH (mm)	AVERAGE LENGTH OF TURN (mm)	AREA PRODUCT Ae x Aw (mm^4)	TYPE NUMBER
1	27.7	13.5	34.1	859	CPH-EFD20-1S-10PD-Z

COIL FORMERS

General data

PARAMETER	SPECIFICATION
Coil former material	liquid crystal polymer (LCP), glass reinforced, flame retardant in accordance with *"UL94 V-0"*; UL file number E83005 (M)
Pin material	copper-tin alloy (CuSn), tin (Sn) plated
Maximum operating temperature	155 °C, *"IEC 60085"*, class F
Resistance to soldering heat	*"IEC 60068-2-20"*, Part 2, Test Tb, method 1B, 350 °C, 3.5 s
Solderability	*"IEC 60068-2-20"*, Part 2, Test Ta, method 1: 235 °C, 2 s

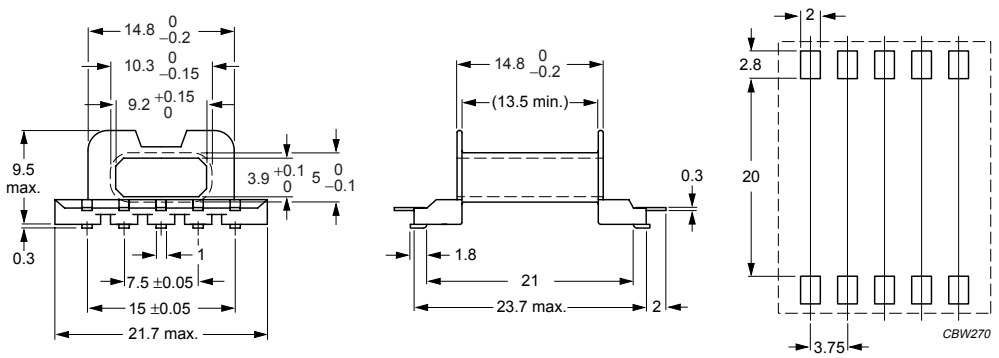

Dimensions in mm.

Fig.4 EFD20/10/7 coil former (SMD); 10-solder pads.

Winding data and area product for EFD20/10/7 coil former (SMD) with 10-solder pads

NUMBER OF SECTIONS	WINDING AREA (mm^2)	MINIMUM WINDING WIDTH (mm)	AVERAGE LENGTH OF TURN (mm)	AREA PRODUCT Ae x Aw (mm^4)	TYPE NUMBER
1	27.7	13.5	34.1	859	CPHS-EFD20-1S-10P

COIL FORMERS

General data

PARAMETER	SPECIFICATION
Coil former material	phenolformaldehyde (PF), glass reinforced, flame retardant in accordance with *"UL94 V-0"*; UL file number E41429 (M)
Solder pad material	copper-tin alloy (CuSn), tin (Sn) plated
Maximum operating temperature	180 °C, *"IEC 60085"*, class H
Resistance to soldering heat	*"IEC 60068-2-20"*, Part 2, Test Tb, method 1B, 350 °C, 3.5 s
Solderability	*"IEC 60068-2-20"*, Part 2, Test Ta, method 1: 235 °C, 2 s

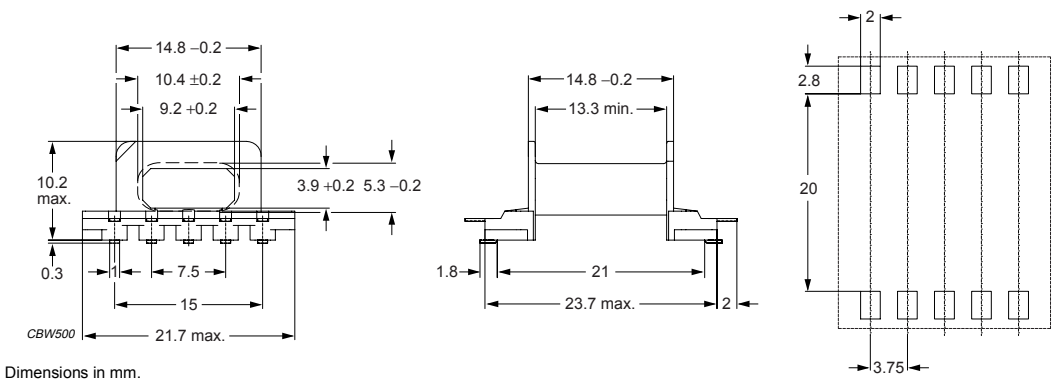

Dimensions in mm.

Fig.5 EFD20/10/7 coil former (SMD); 10-solder pads.

Winding data and area product for EFD20/10/7 coil former (SMD) with 10-solder pads

NUMBER OF SECTIONS	NUMBER OF SOLDER PADS	WINDING AREA (mm^2)	MINIMUM WINDING WIDTH (mm)	AVERAGE LENGTH OF TURN (mm)	AREA PRODUCT Ae x Aw (mm^4)	TYPE NUMBER
1	10	27.2	13.3	34.9	843	CSHS-EFD20-1S-10P-Z

MOUNTING PARTS

General data

ITEM	REMARKS	FIGURE	TYPE NUMBER
Clamp	stainless steel (CrNi); clamping force ≈ 30 N	6	CLM-EFD20
Clip	stainless steel (CrNi); clamping force ≈ 20 N	7	CLI-EFD20

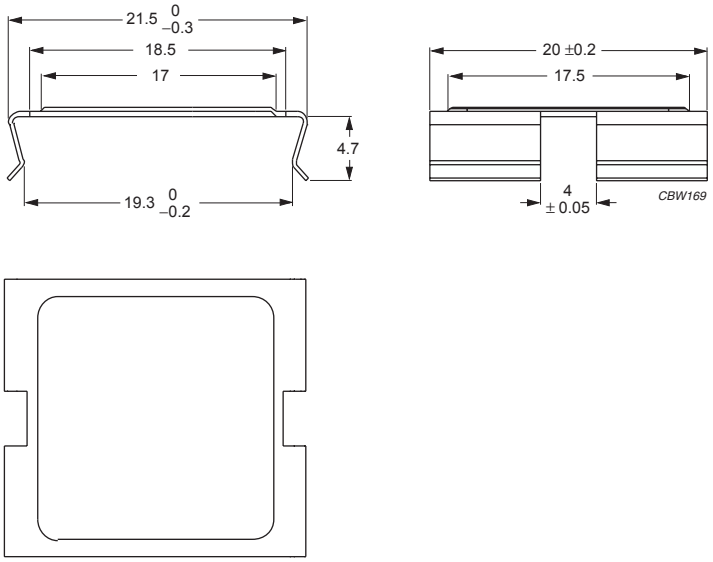

Dimensions in mm.

Fig.6 Clamp CLM-EFD20

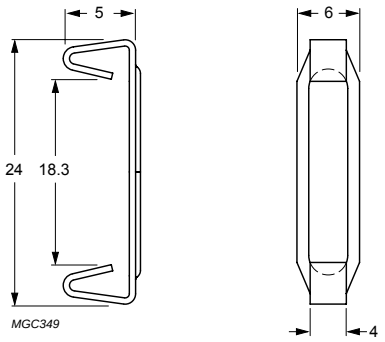

Dimensions in mm.

Fig.7 Clip CLI-EFD20.

CORES

Effective core parameters

SYMBOL	PARAMETER	VALUE	UNIT
$\Sigma(l/A)$	core factor (C1)	1.00	mm^{-1}
V_e	effective volume	3300	mm^3
l_e	effective length	57.0	mm
A_e	effective area	58.0	mm^2
A_{min}	minimum area	55.0	mm^2
m	mass of core half	≈ 8	g

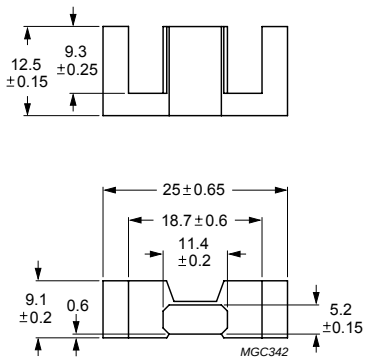

Dimensions in mm.

Fig.1 EFD25/13/9 core half.

Core halves and sets

A_L measured as a set or in combination with a non-gapped core half, clamping force for A_L measurements, 40 ±20 N.

GRADE	A_L (nH)	μ_e	AIR GAP (μm)	TYPE NUMBER
3C90	160 ±3%	≈ 125	≈ 570	EFD25/13/9-3C90-A160
	250 ±3%	≈ 196	≈ 320	EFD25/13/9-3C90-A250
	315 ±5%	≈ 246	≈ 240	EFD25/13/9-3C90-A315
	400 ±8%	≈ 313	≈ 180	EFD25/13/9-3C90-A400
	630 ±10%	≈ 493	≈ 100	EFD25/13/9-3C90-A630
	2200 ±25%	≈ 1720	≈ 0	EFD25/13/9-3C90
3C94	160 ±3%	≈ 125	≈ 570	EFD25/13/9-3C94-A160
	250 ±3%	≈ 196	≈ 320	EFD25/13/9-3C94-A250
	315 ±5%	≈ 246	≈ 240	EFD25/13/9-3C94-A315
	400 ±8%	≈ 313	≈ 180	EFD25/13/9-3C94-A400
	630 ±10%	≈ 493	≈ 100	EFD25/13/9-3C94-A630
	2200 ±25%	≈ 1720	≈ 0	EFD25/13/9-3C94
3C95 des	2660 ±25%	≈ 2085	≈ 0	EFD25/13/9-3C95
3C96 des	2000 ±25%	≈ 1560	≈ 0	EFD25/13/9-3C96

GRADE	A_L (nH)	μ_e	AIR GAP (μm)	TYPE NUMBER
3F3	160 ±3%	≈ 125	≈ 570	EFD25/13/9-3F3-A160
	250 ±3%	≈ 196	≈ 320	EFD25/13/9-3F3-A250
	315 ±5%	≈ 246	≈ 240	EFD25/13/9-3F3-A315
	400 ±8%	≈ 313	≈ 180	EFD25/13/9-3F3-A400
	630 ±10%	≈ 493	≈ 100	EFD25/13/9-3F3-A630
	2000 ±25%	≈ 1560	≈ 0	EFD25/13/9-3F3
3F35 des	1500 ±25%	≈ 1170	≈ 0	EFD25/13/9-3F35
3F4 des	160 ±3%	≈ 125	≈ 500	EFD25/13/9-3F4-A160
	250 ±3%	≈ 196	≈ 270	EFD25/13/9-3F4-A250
	315 ±5%	≈ 246	≈ 290	EFD25/13/9-3F4-A315
	400 ±8%	≈ 313	≈ 130	EFD25/13/9-3F4-A400
	630 ±10%	≈ 493	≈ 60	EFD25/13/9-3F4-A630
	1000 ±25%	≈ 780	≈ 0	EFD25/13/9-3F4
3F45 prot	1000 ±25%	≈ 780	≈ 0	EFD25/13/9-3F45

Properties of core sets under power conditions

GRADE	B (mT) at	CORE LOSS (W) at				
	H = 250 A/m; f = 25 kHz; T = 100 °C	f = 25 kHz; $\hat{B}$ = 200 mT; T = 100 °C	f = 100 kHz; $\hat{B}$ = 100 mT; T = 100 °C	f = 100 kHz; $\hat{B}$ = 200 mT; T = 25 °C	f = 100 kHz; $\hat{B}$ = 200 mT; T = 100 °C	f = 400 kHz; $\hat{B}$ = 50 mT; T = 100 °C
3C90	≥330	≤ 0.35	≤ 0.38	–	–	–
3C94	≥330	–	≤ 0.30	–	≤ 1.8	–
3C95	≥330	–	–	≤ 1.95	≤ 1.85	–
3C96	≥330	–	≤ 0.22	–	≤ 1.4	≤ 0.6
3F35	≥300	–	–	–	–	≤ 0.28
3F3	≥315	–	≤ 0.38	–	–	≤ 0.66
3F4	≥300	–	–	–	–	–

Properties of core sets under power conditions (continued)

GRADE	B (mT) at	CORE LOSS (W) at				
	H = 250 A/m; f = 25 kHz; T = 100 °C	f = 500 kHz; $\hat{B}$ = 50 mT; T = 100 °C	f = 500 kHz; $\hat{B}$ = 100 mT; T = 100 °C	f = 1 MHz; $\hat{B}$ = 30 mT; T = 100 °C	f = 1 MHz; $\hat{B}$ = 50 mT; T = 100 °C	f = 3 MHz; $\hat{B}$ = 10 mT; T = 100 °C
3C90	≥330	–	–	–	–	–
3C94	≥330	–	–	–	–	–
3C95	≥330	–	–	–	–	–
3C96	≥330	≤ 1.2	–	–	–	–
3F35	≥300	≤ 0.42	≤ 3.4	–	–	–
3F3	≥315	–	–	–	–	–
3F4	≥300	–	–	≤ 1.0	–	≤ 1.6
3F45	≥300	–	–	≤ 0.75	≤ 2.8	≤ 1.25

COIL FORMERS

General data

PARAMETER	SPECIFICATION
Coil former material	phenolformaldehyde (PF), glass-reinforced, flame retardant in accordance with *"UL 94V-0"*; UL file number E167521(M)
Pin material	copper-tin alloy (CuSn), tin (Sn) plated, see note 1
Maximum operating temperature	180 °C, *"IEC 60085"*, class H
Resistance to soldering heat	*"IEC 60068-2-20"*, Part 2, Test Tb, method 1B, 350 °C, 3.5 s
Solderability	*"IEC 60068-2-20"*, Part 2, Test Ta, method 1: 235 °C, 2 s

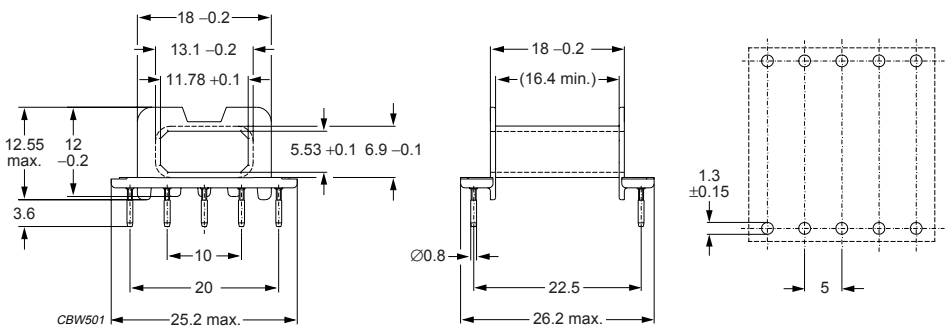

Dimensions in mm.

Fig.2 EFD25/13/9 coil former; 10-pins.

Winding data and area product for EFD25/13/9 coil former with 10-pins

NUMBER OF SECTIONS	WINDING AREA (mm^2)	MINIMUM WINDING WIDTH (mm)	AVERAGE LENGTH OF TURN (mm)	AREA PRODUCT Ae x Aw (mm^4)	TYPE NUMBER
1	40.2	16.4	46.4	2330	CSH-EFD25-1S-10P[1]

1. Also available with post-inserted pins.

COIL FORMERS

General data

PARAMETER	SPECIFICATION
Coil former material	Sumikon PM-9630 (PF), glass-reinforced, flame retardant in accordance with *"UL 94V-0"*; UL file number E41429
Pin material	copper-tin alloy (CuSn), Gold (Au) plated
Maximum operating temperature	180 °C, *"IEC 60085"*, class H
Resistance to soldering heat	*"IEC 60068-2-20"*, Part 2, Test Tb, method 1B, 350 °C, 3.5 s
Solderability	*"IEC 60068-2-20"*, Part 2, Test Ta, method 1: 235 °C, 2 s

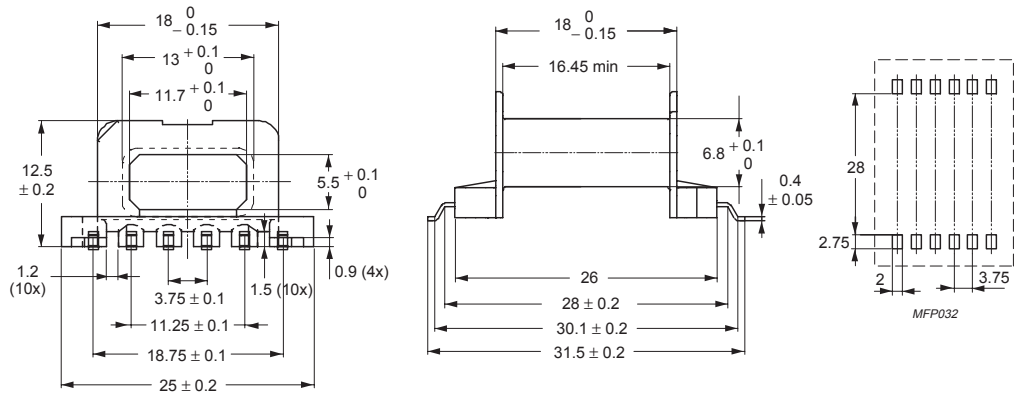

Dimensions in mm.

Fig.3 EFD25/13/9 coil former (SMD) ; 12-pins.

Winding data and area product for EFD25/13/9 coil former with 12-pins

NUMBER OF SECTIONS	WINDING AREA (mm^2)	MINIMUM WINDING WIDTH (mm)	AVERAGE LENGTH OF TURN (mm)	AREA PRODUCT Ae x Aw (mm^4)	TYPE NUMBER
1	39.0	16.45	46.4	2260	CSHS-EFD25-1S-12P

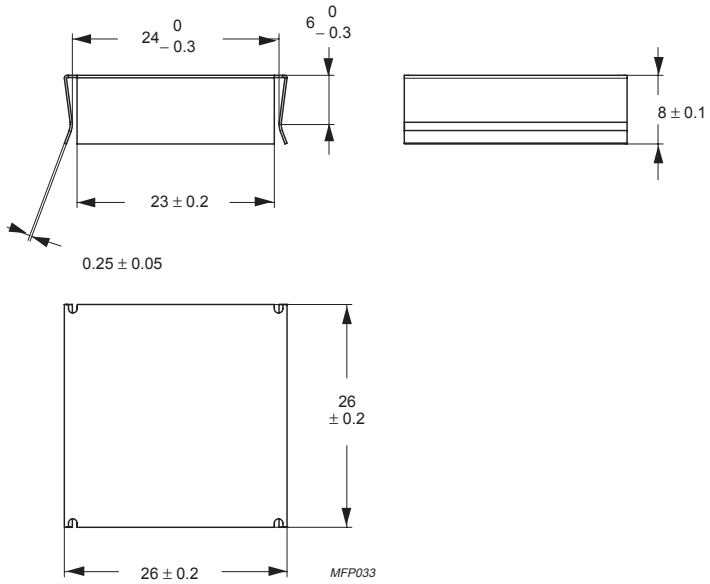

Dimensions in mm.

Fig.4 CLM-EFD25 mounting clamp.

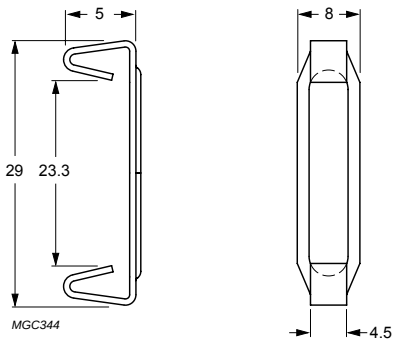

Dimensions in mm.

Fig.5 CLI-EFD25 mounting clip.

MOUNTING PARTS

General data

ITEM	REMARKS	FIGURE	TYPE NUMBER
Clip	stainless steel (CrNi); clamping force ≈ 30 N	4	CLI-EFD25
Clamp	stainless steel (CrNi); clamping force ≈ 30 N	5	CLM-EFD25

CORES

Effective core parameters

SYMBOL	PARAMETER	VALUE	UNIT
$\Sigma(l/A)$	core factor (C1)	0.98	mm^{-1}
V_e	effective volume	4700	mm^3
l_e	effective length	68.0	mm
A_e	effective area	69.0	mm^2
A_{min}	minimum area	66.0	mm^2
m	mass of core half	≈ 12	g

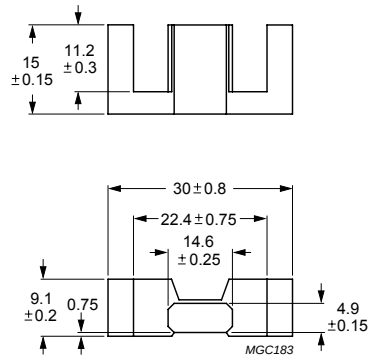

Dimensions in mm.

Fig.1 EFD30/15/9 core half.

Core halves

A_L measured in combination with a non-gapped core half, clamping force for A_L measurements 70 ±20 N.

GRADE	A_L (nH)	μ_e	AIR GAP (μm)	TYPE NUMBER
3C90	160 ±3%	≈ 125	≈ 690	EFD30/15/9-3C90-A160
	250 ±3%	≈ 196	≈ 390	EFD30/15/9-3C90-A250
	315 ±5%	≈ 247	≈ 290	EFD30/15/9-3C90-A315
	400 ±8%	≈ 314	≈ 210	EFD30/15/9-3C90-A400
	630 ±10%	≈ 494	≈ 120	EFD30/15/9-3C90-A630
	2100 ±25%	≈ 1720	≈ 0	EFD30/15/9-3C90
3C94	160 ±3%	≈ 125	≈ 690	EFD30/15/9-3C94-A160
	250 ±3%	≈ 196	≈ 390	EFD30/15/9-3C94-A250
	315 ±5%	≈ 247	≈ 290	EFD30/15/9-3C94-A315
	400 ±8%	≈ 314	≈ 210	EFD30/15/9-3C94-A400
	630 ±10%	≈ 494	≈ 120	EFD30/15/9-3C94-A630
	2100 ±25%	≈ 1720	≈ 0	EFD30/15/9-3C94
3C95 des	2520 ±25%	≈ 1980	≈ 0	EFD30/15/9-3C95
3C96 des	1900 ±25%	≈ 1560	≈ 0	EFD30/15/9-3C96

GRADE	A_L (nH)	μ_e	AIR GAP (μm)	TYPE NUMBER
3F3	160 ±3%	≈ 125	≈ 690	EFD30/15/9-3F3-A160
	250 ±3%	≈ 196	≈ 390	EFD30/15/9-3F3-A250
	315 ±5%	≈ 247	≈ 290	EFD30/15/9-3F3-A315
	400 ±8%	≈ 314	≈ 210	EFD30/15/9-3F3-A400
	630 ±10%	≈ 494	≈ 120	EFD30/15/9-3F3-A630
	1900 ±25%	≈ 1560	≈ 0	EFD30/15/9-3F3
3F35 des	1450 ±25%	≈ 1170	≈ 0	EFD30/15/9-3F35
3F4 des	160 ±3%	≈ 125	≈ 620	EFD30/15/9-3F4-A160
	250 ±3%	≈ 196	≈ 320	EFD30/15/9-3F4-A250
	315 ±5%	≈ 247	≈ 230	EFD30/15/9-3F4-A315
	400 ±8%	≈ 314	≈ 160	EFD30/15/9-3F4-A400
	630 ±10%	≈ 494	≈ 65	EFD30/15/9-3F4-A630
	1000 ±25%	≈ 780	≈ 0	EFD30/15/9-3F4
3F45 prot	1000 ±25%	≈ 780	≈ 0	EFD30/15/9-3F45

Properties of core sets under power conditions

GRADE	B (mT) at	CORE LOSS (W) at				
	H = 250 A/m; f = 25 kHz; T = 100 °C	f = 25 kHz; $\hat{B}$ = 200 mT; T = 100 °C	f = 100 kHz; $\hat{B}$ = 100 mT; T = 100 °C	f = 100 kHz; $\hat{B}$ = 200 mT; T = 25 °C	f = 100 kHz; $\hat{B}$ = 200 mT; T = 100 °C	f = 400 kHz; $\hat{B}$ = 50 mT; T = 100 °C
3C90	≥330	≤ 0.50	≤ 0.54	–	–	–
3C94	≥330	–	≤ 0.43	–	≤ 2.6	–
3C95	≥330	–	–	≤ 2.77	≤ 2.63	–
3C96	≥340	–	≤ 0.32	–	≤ 2.0	≤ 0.82
3F35	≥300	–	–	–	–	≤ 0.4
3F3	≥315	–	≤ 0.54	–	–	≤ 0.91
3F4	≥300	–	–	–	–	–

Properties of core sets under power conditions (continued)

GRADE	B (mT) at	CORE LOSS (W) at				
	H = 250 A/m; f = 25 kHz; T = 100 °C	f = 500 kHz; $\hat{B}$ = 50 mT; T = 100 °C	f = 500 kHz; $\hat{B}$ = 100 mT; T = 100 °C	f = 1 MHz; $\hat{B}$ = 30 mT; T = 100 °C	f = 1 MHz; $\hat{B}$ = 50 mT; T = 100 °C	f = 3 MHz; $\hat{B}$ = 10 mT; T = 100 °C
3C90	≥330	–	–	–	–	–
3C94	≥330	–	–	–	–	–
3C95	≥330	–	–	–	–	–
3C96	≥340	≤ 1.7	–	–	–	–
3F35	≥300	≤ 0.6	≤ 4.5	–	–	–
3F3	≥315	–	–	–	–	–
3F4	≥300	–	–	≤ 1.4	–	≤ 2.2
3F45	≥300	–	–	≤ 1.1	≤ 4.0	≤ 1.8

COIL FORMERS

General data

PARAMETER	SPECIFICATION
Coil former material	phenolformaldehyde (PF), glass-reinforced, flame retardant in accordance with *"UL 94V-0"*; UL file number E167521 (M)
Pin material	copper-tin alloy (CuSn), tin (Sn) plated, see note 1
Maximum operating temperature	180 °C, *"IEC 60085"*, class H
Resistance to soldering heat	*"IEC 60068-2-20"*, Part 2, Test Tb, method 1B, 350 °C, 3.5 s
Solderability	*"IEC 60068-2-20"*, Part 2, Test Ta, method 1: 235 °C, 2 s

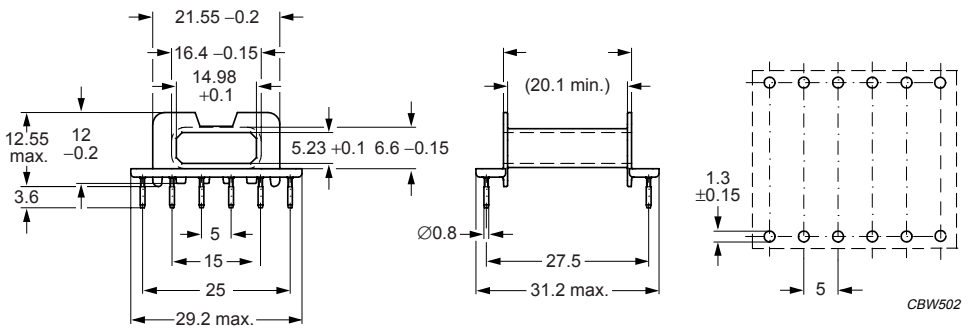

Dimensions in mm.

Fig.2 EFD30/15/9 coil former; 12-pins.

Winding data and area product for EFD30/15/9 coil former with 12-pins

NUMBER OF SECTIONS	WINDING AREA (mm^2)	MINIMUM WINDING WIDTH (mm)	AVERAGE LENGTH OF TURN (mm)	AREA PRODUCT Ae x Aw (mm^4)	TYPE NUMBER
1	52.3	20.1	52.9	3610	CSH-EFD30-1S-12P[1]

Note

1. Also available with post-inserted pins.

MOUNTING PARTS

General data

ITEM	REMARKS	FIGURE	TYPE NUMBER
Clip	stainless steel (CrNi); clamping force ≈35 N	3	CLI-EFD30

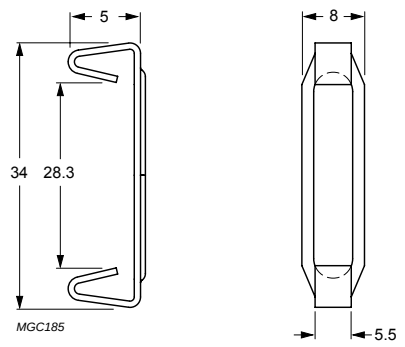

Dimensions in mm.

Fig.3 CLI-EFD30 mounting clip.

Soft Ferrites

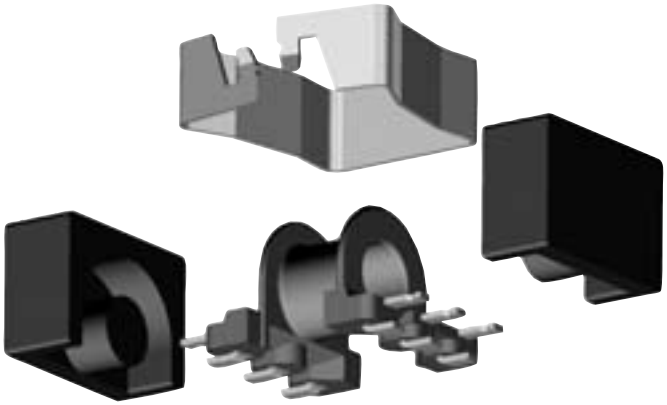

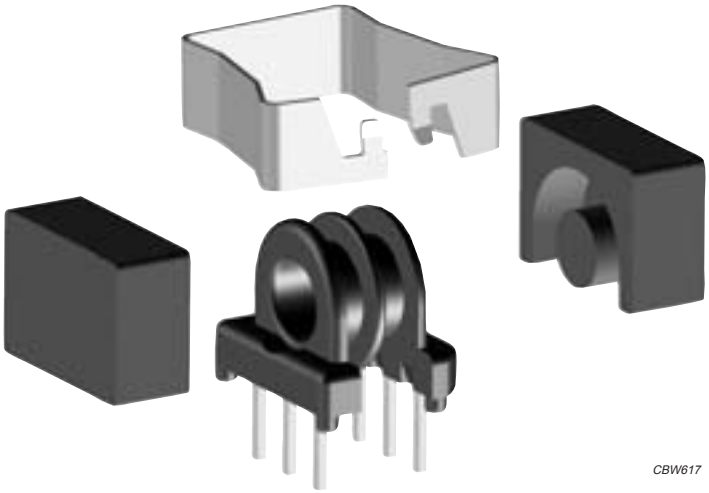
CBW617

PRODUCT OVERVIEW AND TYPE NUMBER STRUCTURE

Product overview EP cores

CORE TYPE	V_e (mm^3)	A_e (mm^2)	MASS (g)
EP5	28.7	3.0	0.5
EP7	165	10.7	1.4
EP10	215	11.3	2.8
EP13	472	19.5	4.7
EP17	999	33.7	12
EP20	3230	78.7	27

- In accordance with IEC 62317, part 5.

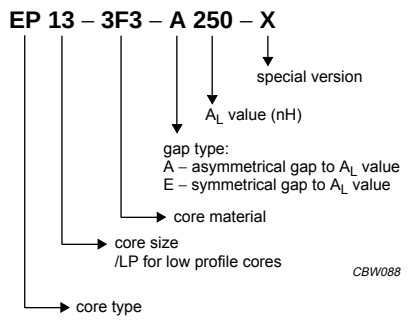

Fig.1 Type number structure for cores.

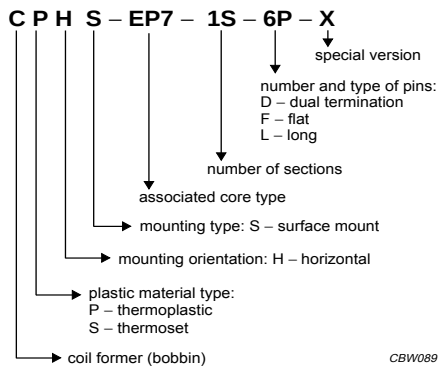

Fig.2 Type number structure for coil formers.

CORE SETS

Effective core parameters

SYMBOL	PARAMETER	VALUE	UNIT
$\Sigma(l/A)$	core factor (C1)	3.20	mm^{-1}
V_e	effective volume	28.7	mm^3
l_e	effective length	9.70	mm
A_e	effective area	3.00	mm^2
A_{min}	minimum area	2.27	mm^2
m	mass of core set	≈ 0.5	g

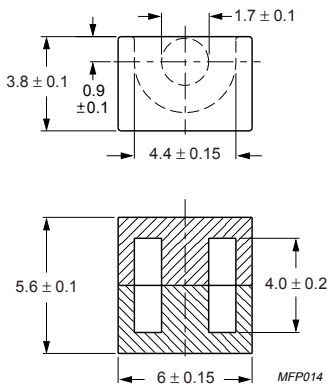

Dimensions in mm.

Fig. 1 EP5 core set.

Core sets for general purpose transformers and power applications

Clamping force for A_L measurements, 10 ± 5 N.

GRADE	A_L (nH)	μ_e	AIR GAP (μm)	TYPE NUMBER
3C94	16 ± 3 %	≈ 41	≈ 320	EP5-3C94-A16
	25 ± 3 %	≈ 64	≈ 170	EP5-3C94-A25
	40 ± 5 %	≈ 102	≈ 90	EP5-3C94-A40
	63 ± 8 %	≈ 160	≈ 50	EP5-3C94-A63
	400 ± 25 %	≈ 1020	≈0	EP5-3C94
3C96 des	380 ± 25 %	≈ 970	≈0	EP5-3C96
3F35 des	16 ± 3 %	≈ 41	≈ 320	EP5-3F35-A16
	25 ± 3 %	≈ 64	≈ 170	EP5-3F35-A25
	40 ± 5 %	≈ 102	≈ 90	EP5-3F35-A40
	63 ± 8 %	≈ 160	≈ 50	EP5-3F35-A63
	320 ± 25 %	≈ 815	≈0	EP5-3F35

Core sets for filter applications
Clamping force for A_L measurements, 10 ± 5 N.

GRADE	A_L (nH)	μ_e	AIR GAP (μm)	TYPE NUMBER
3B46 des	500 ± 25 %	≈ 1280	≈ 0	EP5-3B46

Core sets of high permeability grades
Clamping force for A_L measurements, 10 ± 5 N.

GRADE	A_L (nH)	μ_e	AIR GAP (μm)	TYPE NUMBER
3E55 des	16 ± 3 %	≈ 41	≈ 320	EP5-3E55-A16
	25 ± 3 %	≈ 64	≈ 170	EP5-3E55-A25
	40 ± 5 %	≈ 102	≈ 90	EP5-3E55-A40
	63 ± 8 %	≈ 160	≈ 50	EP5-3E55-A63
	2000 + 40 / – 30 %	≈ 5100	≈ 0	EP5-3E55
3E6	2200 + 40 / – 30 %	≈ 5600	≈ 0	EP5-3E6

Properties of core sets under power conditions

GRADE	B (mT) at	CORE LOSS (W) at			
	H = 250 A/m; f = 10 kHz; T = 100 °C	f = 100 kHz; $\hat{B}$ = 100 mT; T = 100 °C	f = 100 kHz; $\hat{B}$ = 200 mT; T = 100 °C	f = 500 kHz; $\hat{B}$ = 50 mT; T = 100 °C	f = 500 kHz; $\hat{B}$ = 100 mT; T = 100 °C
3C94	≥ 320	≤ 0.002	≤ 0.014	–	–
3C96	≥ 340	–	≤ 0.011	≤ 0.009	–
3F35	≥ 300	–	–	≤ 0.003	≤ 0.025

COIL FORMERS

General data

PARAMETER	SPECIFICATION
Coil former material	Liquid crystal polymer (LCP), glass-reinforced, flame retardant in accordance with *"UL 94V-0";* UL file number E54705(M)
Pin material	copper-tin alloy (CuSn), tin (Sn) plated
Maximum operating temperature	155 °C, *"IEC 60085"*, class F
Resistance to soldering heat	*"IEC 60068-2-20"*, Part 2, Test Tb, method 1B, 350 °C, 3.5 s
Solderability	*"IEC 60068-2-20"*, Part 2, Test Ta, method 1, 235 °C, 2 s

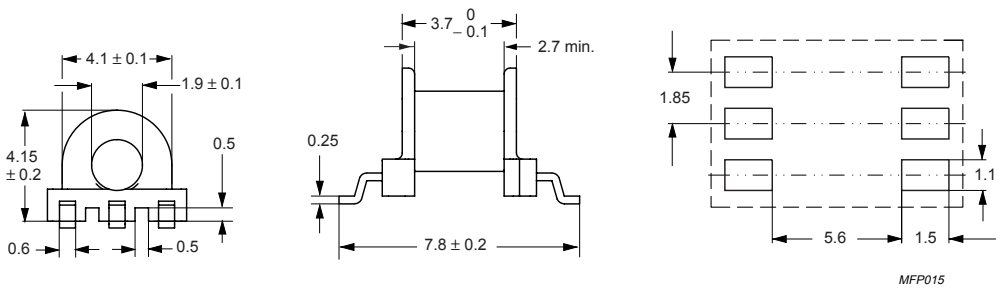

Dimensions in mm.

Fig. 2 EP5 coil former: 6-pads.

Winding data and area product for 6-pads EP5 coil former

NUMBER OF SECTIONS	WINDING AREA (mm^2)	NOMINAL WINDING WIDTH (mm)	AVERAGE LENGTH OF TURN (mm)	AREA PRODUCT Ae x Aw (mm^4)	TYPE NUMBER
1	1.89	2.7	10.5	5.67	CPHS-EP5-1S-6P

MOUNTING PARTS

General data

ITEM	REMARKS	FIGURE	TYPE NUMBER
Mounting clip	stainless steel (CrNi); to be used in combination with CPHS-EP5-1S-6P	3	CLI-EP5/6

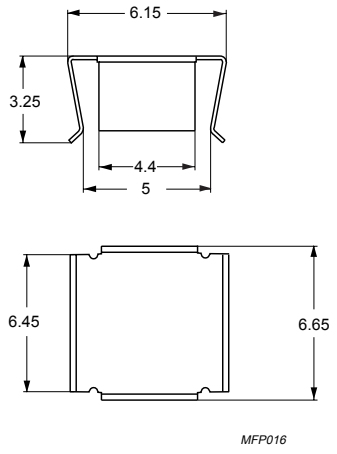

Dimensions in mm.

Fig. 3 Mounting clip CLI-EP5/6.

CORE SETS

Effective core parameters

SYMBOL	PARAMETER	VALUE	UNIT
$\Sigma(l/A)$	core factor (C1)	1.45	mm^{-1}
V_e	effective volume	165	mm^3
l_e	effective length	15.5	mm
A_e	effective area	10.7	mm^2
A_{min}	minimum area	8.55	mm^2
m	mass of core set	≈ 1.4	g

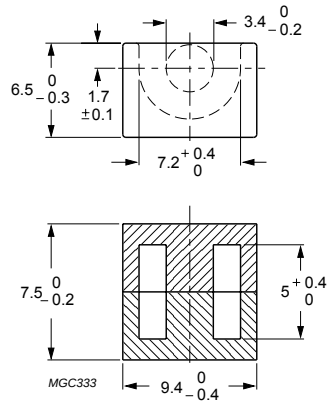

Dimensions in mm.

Fig.1 EP7 core set.

Core sets for filter applications

Clamping force for A_L measurements, 20 ±10 N.

GRADE	A_L (nH)	μ_e	AIR GAP (μm)	TYPE NUMBER
3B46 des	1500 ±25%	≈ 1730	≈ 0	EP7-3B46

Core sets for general purpose transformers and power applications

Clamping force for A_L measurements, 20 ±10 N.

GRADE	A_L (nH)	μ_e	TOTAL AIR GAP (μm)	TYPE NUMBER
3C81	25 ±3%	≈ 29	≈ 880	EP7-3C81-E25
	40 ±3%	≈ 46	≈ 480	EP7-3C81-A40
	63 ±3%	≈ 73	≈ 270	EP7-3C81-A63
	100 ±3%	≈115	≈150	EP7-3C81-A100
	160 ±5%	≈184	≈ 90	EP7-3C81-A160
	1300 ±25%	≈ 1500	≈ 0	EP7-3C81
3C91 des	1300 ±25%	≈ 1500	≈ 0	EP7-3C91
3C94	25 ±3%	≈ 29	≈ 880	EP7-3C94-E25
	40 ±3%	≈ 46	≈ 480	EP7-3C94-A40
	63 ±3%	≈ 73	≈ 270	EP7-3C94-A63
	100 ±3%	≈115	≈150	EP7-3C94-A100
	160 ±5%	≈184	≈ 90	EP7-3C94-A160
	1200 ±25%	≈ 1380	≈ 0	EP7-3C94

GRADE	A_L (nH)	μ_e	TOTAL AIR GAP (μm)	TYPE NUMBER
3C96 des	1120 ±25%	≈ 1290	≈ 0	EP7-3C96
3F3	25 ±3%	≈ 29	≈ 880	EP7-3F3-E25
	40 ±3%	≈ 46	≈ 480	EP7-3F3-A40
	63 ±3%	≈ 73	≈ 270	EP7-3F3-A63
	100 ±3%	≈ 115	≈150	EP7-3F3-A100
	160 ±5%	≈ 184	≈ 90	EP7-3F3-A160
	1000 ±25%	≈ 1150	≈ 0	EP7-3F3
3F35 des	850 ±25%	≈ 980	≈ 0	EP7-3F35

Core sets of high permeability grades

Clamping force for A_L measurements, 20 ±10 N.

GRADE	A_L (nH)	μ_e	TYPE NUMBER
3E27	3400 ± 25%	≈ 3920	EP7-3E27
3E5	5200 +40/–30%	≈ 5990	EP7-3E5
3E55 des	5200 +40/–30%	≈ 5990	EP7-3E55
3E6	5800 +40/–30%	≈ 6680	EP7-3E6

Properties of core sets under power conditions

GRADE	B (mT) at	CORE LOSS (W) at			
	H = 250 A/m; f = 25 kHz; T = 100 °C	f = 25 kHz; $\hat{B}$ = 200 mT; T = 100 °C	f = 100 kHz; $\hat{B}$ = 100 mT; T = 100 °C	f = 100 kHz; $\hat{B}$ = 200 mT; T = 100 °C	f = 400 kHz; $\hat{B}$ = 50 mT; T = 100 °C
3C81	≥320	≤ 0.04	–	–	–
3C91	≥320	–	≤ 0.11[1]	≤ 0.06[1]	–
3C94	≥320	–	≤ 0.014	≤ 0.08	–
3C96	≥340	–	≤ 0.011	≤ 0.06	≤ 0.025
3F35	≥320	–	–	–	≤ 0.015
3F3	≥315	–	≤ 0.02	–	≤ 0.035

Properties of core sets under power conditions (continued)

GRADE	B (mT) at	CORE LOSS (W) at			
	H = 250 A/m; f = 25 kHz; T = 100 °C	f = 500 kHz; $\hat{B}$ = 50 mT; T = 100 °C	f = 500 kHz; $\hat{B}$ = 100 mT; T = 100 °C	f = 1 MHz; $\hat{B}$ = 30 mT; T = 100 °C	f = 3 MHz; $\hat{B}$ = 10 mT; T = 100 °C
3C81	≥320	–	–	–	–
3C91	≥320	–	–	–	–
3C94	≥320	–	–	–	–
3C96	≥340	≤ 0.055	–	–	–
3F35	≥320	≤ 0.02	≤ 0.15	–	–
3F3	≥315	–	–	–	–

Note

1. Measured at 60 °C.

COIL FORMERS

General data

PARAMETER	SPECIFICATION
Coil former material	phenolformaldehyde (PF), glass-reinforced, flame retardant in accordance with *"UL 94V-0";* UL file number E41429(M)
Pin material	copper clad steel, tin (Sn) plated
Maximum operating temperature	180 °C, *"IEC 60085"*, class H
Resistance to soldering heat	*"IEC 60068-2-20"*, Part 2, Test Tb, method 1B, 350 °C, 3.5 s
Solderability	*"IEC 60068-2-20"*, Part 2, Test Ta, method 1, 235 °C, 2 s

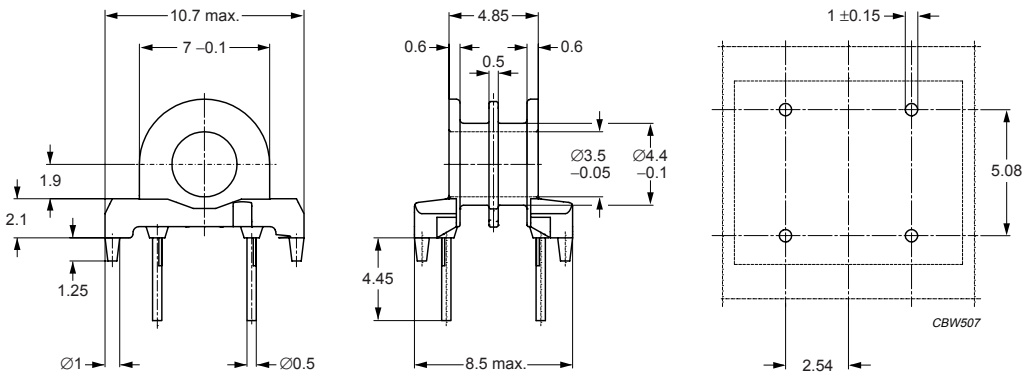

Dimensions in mm.

Fig.2 EP7 coil former: 4-pins.

Winding data and area product for 4-pins EP7 coil former

NUMBER OF SECTIONS	WINDING AREA (mm^2)	NOMINAL WINDING WIDTH (mm)	AVERAGE LENGTH OF TURN (mm)	AREA PRODUCT Ae x Aw (mm^4)	TYPE NUMBER
2	2×1.75	2×1.45	17.9	2 x 18.7	CSH-EP7-2S-4P-TA

General data CSH-EP7-1S-6P-B

PARMETER	SPECIFICATION
Coil former material	phenolformaldehyde (PF), glass-reinforced, flame retardant in accordance with *"UL 94V-0"*; UL file number E41429(M)
Pin material	copper clad steel, tin (Sn) plated
Maximum operating temperature	180 °C, *"IEC 60085"*, class H
Resistance to soldering heat	*"IEC 60068-2-20"*, Part 2, Test Tb, method 1B, 350 °C, 3.5 s
Solderability	*"IEC 60068-2-20"*, Part 2, Test Ta, method 1, 235 °C, 2 s

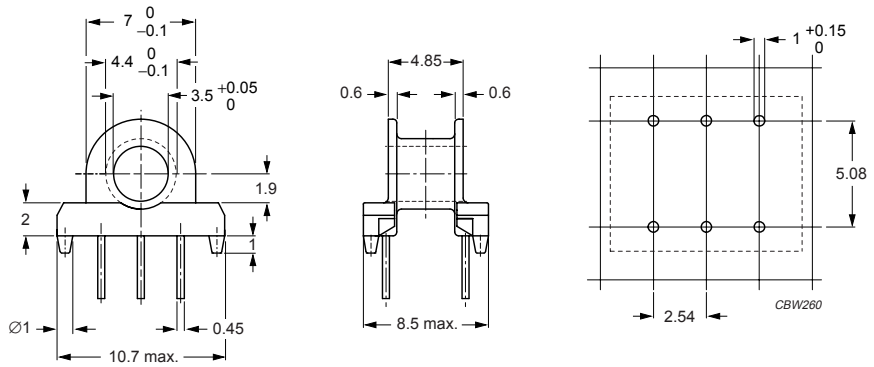

Dimensions in mm.

Fig.3 EP7 coil former: 6-pins.

Winding data and area product for 4 and 6-pins EP7 coil former

NUMBER OF SECTIONS	MINIMUM WINDING AREA (mm^2)	NOMINAL WINDING WIDTH (mm)	AVERAGE LENGTH OF TURN (mm)	AREA PRODUCT Ae x Aw (mm^4)	TYPE NUMBER
1	4.3	3.4	17.7	46.0	CSH-EP7-1S-6P-BZ
1	4.3	3.4	17.7	46.0	CSH-EP7-1S-4P-BZ

General data for 6-pads EP7 SMD coil former

PARAMETER	SPECIFICATION
Coil former material	phenolformaldehyde (PF), glass reinforced, flame retardant in accordance with *"UL 94V-0"*; UL file number: E41429 (M)
Solder pad material	copper-clad steel , tin (Sn) plated
Maximum operating temperature	155 °C, *"IEC 60085"*, class F
Resistance to soldering heat	*"IEC 60068-2-20"*, Part 2, Test Tb, method 1B, 350 °C, 3.5 s
Solderability	*"IEC 60068-2-20"*, Part 2, Test Ta, method 1: 235 °C, 2 s

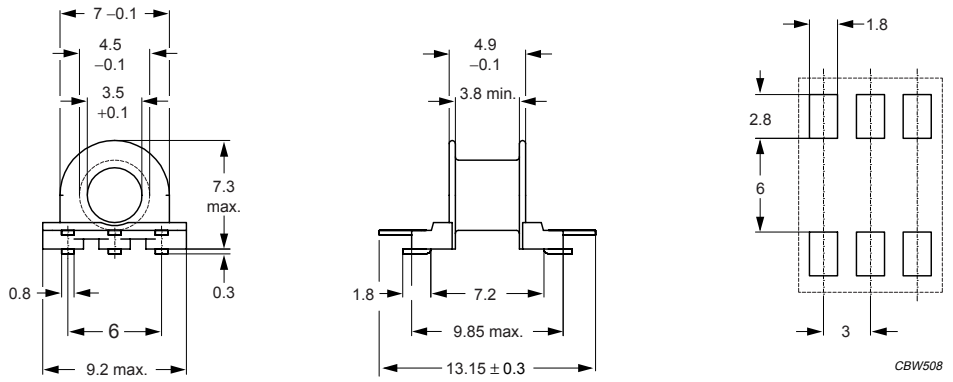

Dimensions in mm.

Fig.4 Coil former CSHS-EP7-1S-6P: 6-pads.

Winding data and area product for 6-pads EP7 SMD coil former

NUMBER OF SECTIONS	WINDING AREA (mm^2)	MINIMUM WINDING WIDTH (mm)	AVERAGE LENGTH OF TURN (mm)	AREA PRODUCT Ae x Aw (mm^4)	TYPE NUMBER
1	4.7	3.9	17.9	50.3	CSHS-EP7-1S-6P-Z
1	4.7	3.9	17.9	50.3	CSHS-EP7-1S-5P-Z

MOUNTING PARTS

General data

ITEM	REMARKS	FIGURE	TYPE NUMBER
Mounting clip	stainless steel (CrNi), tin (Sn) plated ; to be used in combination with CSH-EP7-1S-6P-BZ	5	CLI/P-EP7
Mounting clip	stainless steel (CrNi); clamping force ≈22 N	6	CLI-EP7

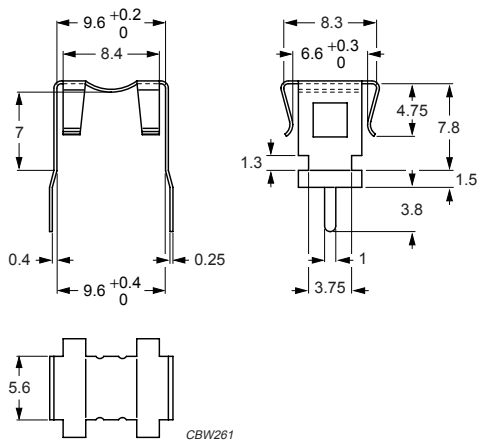

Dimensions in mm.

Fig.5 Mounting clip CLI/P-EP7.

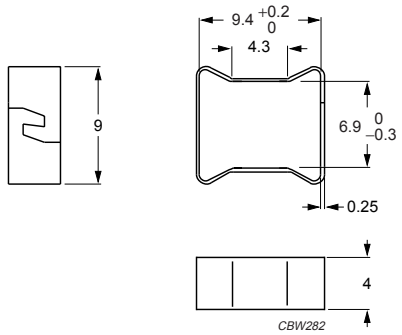

Dimensions in mm.

Fig.6 Mounting clip CLI-EP7.

CORE SETS

Effective core parameters

SYMBOL	PARAMETER	VALUE	UNIT
$\Sigma(l/A)$	core factor (C1)	1.70	mm^{-1}
V_e	effective volume	215	mm^3
l_e	effective length	19.3	mm
A_e	effective area	11.3	mm^2
A_{min}	minimum area	8.55	mm^2
m	mass of core set	≈ 2.8	g

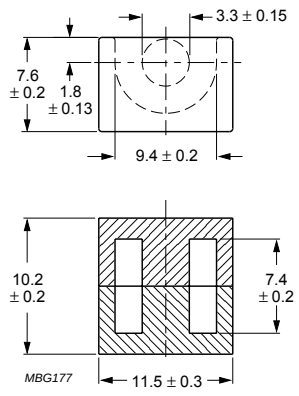

Dimensions in mm.

Fig.1 EP10 core set.

Core sets for filter applications

Clamping force for A_L measurements, 30 ±10 N.

GRADE	A_L (nH)	μ_e	AIR GAP (μm)	TYPE NUMBER
3B46 des	1400 ±25%	≈ 1890	≈ 0	EP10-3B46

Core sets for general purpose transformers and power applications

Clamping force for A_L measurements, 30 ±10 N.

GRADE	A_L (nH)	μ_e	TOTAL AIR GAP (μm)	TYPE NUMBER
3C81	25 ±3%	≈ 34	≈1010	EP10-3C81-E25
	40 ±3%	≈ 54	≈ 530	EP10-3C81-A40
	63 ±3%	≈ 86	≈ 290	EP10-3C81-A63
	100 ±3%	≈ 136	≈ 160	EP10-3C81-A100
	160 ±5%	≈ 217	≈ 90	EP10-3C81-A160
	1200 ±25%	≈ 1630	≈ 0	EP10-3C81
3C91 des	1200 ±25%	≈ 1630	≈0	EP10-3C91
3C94	25 ±3%	≈ 34	≈1010	EP10-3C94-E25
	40 ±3%	≈ 54	≈ 530	EP10-3C94-A40
	63 ±3%	≈ 86	≈ 290	EP10-3C94-A63
	100 ±3%	≈ 136	≈ 160	EP10-3C94-A100
	160 ±5%	≈ 217	≈ 90	EP10-3C94-A160
	1140 ±25%	≈ 1550	≈ 0	EP10-3C94

GRADE	A_L (nH)	μ_e	TOTAL AIR GAP (μm)	TYPE NUMBER
3C96 des	1000 ±25%	≈ 1350	≈ 0	EP10-3C96
3F3	25 ±3%	≈ 34	≈1010	EP10-3F3-E25
	40 ±3%	≈ 54	≈ 530	EP10-3F3-A40
	63 ±3%	≈ 86	≈ 290	EP10-3F3-A63
	100 ±3%	≈ 136	≈ 160	EP10-3F3-A100
	160 ±5%	≈ 217	≈ 90	EP10-3F3-A160
	1000 ±25%	≈1360	≈ 0	EP10-3F3
3F35 des	800 ±25%	≈1090	≈ 0	EP10-3F35

Core sets of high permeability grades

Clamping force for A_L measurements, 30 ±10 N.

GRADE	A_L (nH)	μ_e	AIR GAP (μm)	TYPE NUMBER
3E27	3400 ± 25%	≈ 4630	≈ 0	EP10-3E27
3E5	4800 +40/–30%	≈ 6530	≈ 0	EP10-3E5
3E55 des	4800 +40/–30%	≈ 6530	≈ 0	EP10-3E55
3E6	5400 +40/–30%	≈ 7340	≈ 0	EP10-3E6

Properties of core sets under power conditions

GRADE	B (mT) at	CORE LOSS (W) at			
	H = 250 A/m; f = 25 kHz; T = 100 °C	f = 25 kHz; $\hat{B}$ = 200 mT; T = 100 °C	f = 100 kHz; $\hat{B}$ = 100 mT; T = 100 °C	f = 100 kHz; $\hat{B}$ = 200 mT; T = 100 °C	f = 400 kHz; $\hat{B}$ = 50 mT; T = 100 °C
3C81	≥315	≤ 0.043	–	–	–
3C91	≥315	–	≤ 0.014(1)	≤ 0.08(1)	–
3C94	≥320	–	≤ 0.019	≤ 0.1	–
3C96	≥340	–	≤ 0.014	≤ 0.08	≤ 0.035
3F3	≥315	–	≤ 0.025	–	≤ 0.045
3F35	≥300	–	–	–	≤ 0.02

Properties of core sets under power conditions (continued)

GRADE	B (mT) at	CORE LOSS (W) at			
	H = 250 A/m; f = 25 kHz; T = 100 °C	f = 500 kHz; $\hat{B}$ = 50 mT; T = 100 °C	f = 500 kHz; $\hat{B}$ = 100 mT; T = 100 °C	f = 1 MHz; $\hat{B}$ = 30 mT; T = 100 °C	f = 3 MHz; $\hat{B}$ = 10 mT; T = 100 °C
3C81	≥315	–	–	–	–
3C91	≥315	–	–	–	–
3C94	≥320	–	–	–	–

GRADE	B (mT) at	CORE LOSS (W) at			
	H = 250 A/m; f = 25 kHz; T = 100 °C	f = 500 kHz; $\hat{B}$ = 50 mT; T = 100 °C	f = 500 kHz; $\hat{B}$ = 100 mT; T = 100 °C	f = 1 MHz; $\hat{B}$ = 30 mT; T = 100 °C	f = 3 MHz; $\hat{B}$ = 10 mT; T = 100 °C
3C96	≥340	≤ 0.07	–	–	–
3F35	≥300	≤ 0.025	≤ 0.2	–	–
3F3	≥315	–	–	–	–

Note

1. Measured at 60 °C.

COIL FORMER

General data CSH-EP10-1S-8P

PARAMETER	SPECIFICATION
Coil former material	phenolformaldehyde (PF), glass-reinforced, flame retardant in accordance with *"UL 94V-0"*; UL file number E41429(M)
Pin material	copper clad steel, tin (Sn) plated
Maximum operating temperature	180 °C, *"IEC 60085"*, class H
Resistance to soldering heat	*"IEC 60068-2-20"*, Part 2, Test Tb, method 1B, 350 °C, 3.5 s
Solderability	*"IEC 60068-2-20"*, Part 2, Test Ta, method 1, 235 °C, 2 s

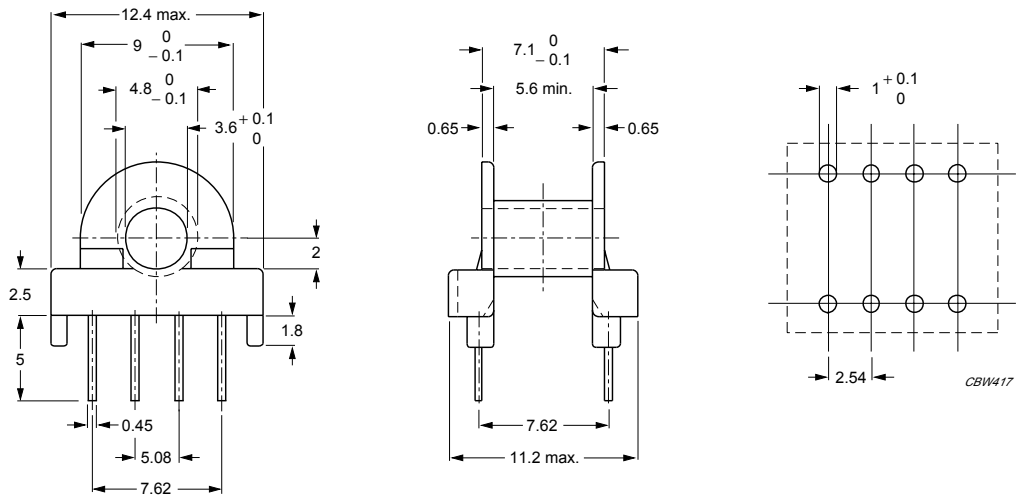

Dimensions in mm.

Fig.2 EP10 coil former: 8-pins.

Winding data and area product for 8-pins EP10 coil former

NUMBER OF SECTIONS	WINDING AREA (mm^2)	MINIMUM WINDING WIDTH (mm)	AVERAGE LENGTH OF TURN (mm)	AREA PRODUCT Ae x Aw (mm^4)	TYPE NUMBER
1	11.4	5.6	21.5	129	CSH-EP10-1S-8P

General data CSH-EP10-2S-8P

PARAMETER	SPECIFICATION
Coil former material	phenolformaldehyde (PF), glass-reinforced, flame retardant in accordance with *"UL 94V-0"*; UL file number E41429 (M)
Pin material	copper-clad steel, tin (Sn) plated
Maximum operating temperature	155 °C, *"IEC 60085"*, class F
Resistance to soldering heat	*"IEC 60068-2-20"*, Part 2, Test Tb, method 1B, 350 °C, 3.5 s
Solderability	*"IEC 60068-2-20"*, Part 2, Test Ta, method 1, 235 °C, 2 s

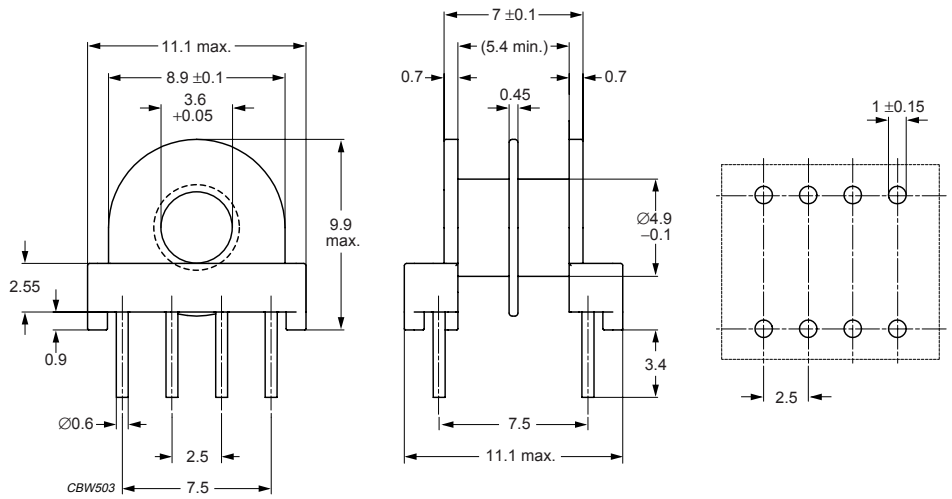

Dimensions in mm.

Fig.3 EP10 coil former.

Winding data and area product for EP10 coil former

NUMBER OF SECTIONS	MINIMUM WINDING AREA (mm^2)	NOMINAL WINDING WIDTH (mm)	AVERAGE LENGTH OF TURN (mm)	AREA PRODUCT Ae x Aw (mm^4)	TYPE NUMBER
2	2 × 4.8	2 × 2.6	21.6	2 x 54.2	CSH-EP10-2S-8P

General data CSHS-EP10-1S-8P-T

PARAMETER	SPECIFICATION
Coil former material	phenolformaldehyde (PF), glass-reinforced, flame retardant in accordance with *"UL 94V-0"*; UL file number E41429 (M)
Pin material	copper-clad steel, tin (Sn) plated
Maximum operating temperature	155 °C, *"IEC 60085"*, class F
Resistance to soldering heat	*"IEC 60068-2-20"*, Part 2, Test Tb, method 1B, 350 °C, 3.5 s
Solderability	*"IEC 60068-2-20"*, Part 2, Test Ta, method 1, 235 °C, 2 s

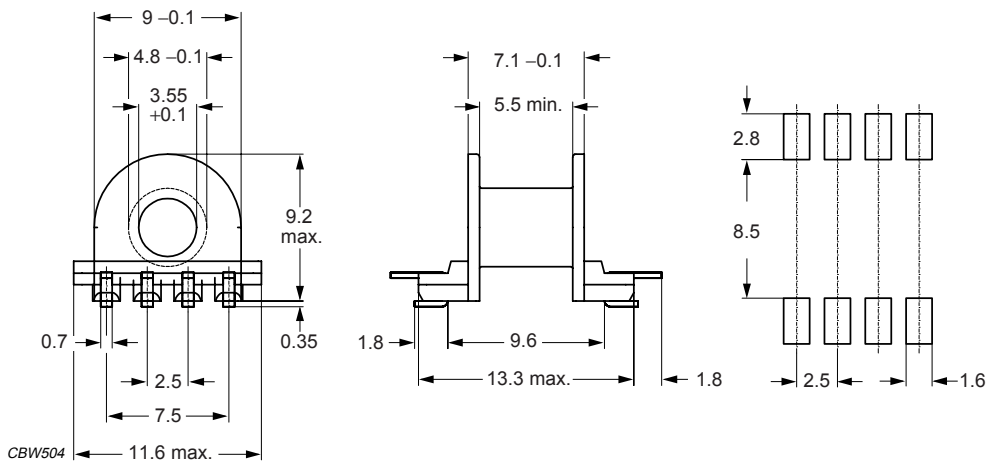

Dimensions in mm.

Fig.4 EP10 coil former.

Winding data and area product for EP10 coil former

NUMBER OF SECTIONS	MINIMUM WINDING AREA (mm^2)	NOMINAL WINDING WIDTH (mm)	AVERAGE LENGTH OF TURN (mm)	AREA PRODUCT Ae x Aw (mm^4)	TYPE NUMBER
1	11.3	5.5	21.5	128	CSHS-EP10-1S-8P-T

MOUNTING PARTS

General data

ITEM	REMARKS	FIGURE	TYPE NUMBER
Clasp	copper-nickel-zinc alloy (nickel silver)	5	CLA-EP10
Spring	copper-nickel-zinc alloy (nickel silver)	6	SPR-EP10
Clip	stainless steel (CrNi); clamping force ≈27 N	7	CLI-EP10

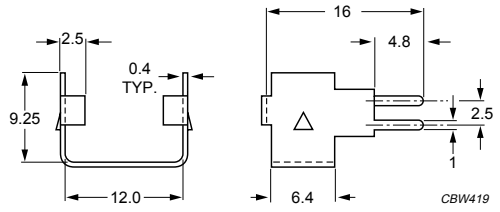

Dimensions in mm.

Fig.5 Mounting clasp CLA-EP10.

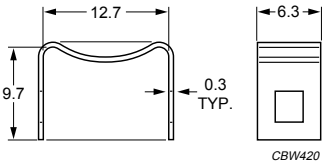

Dimensions in mm.

Fig.6 Mounting spring SPR-EP10.

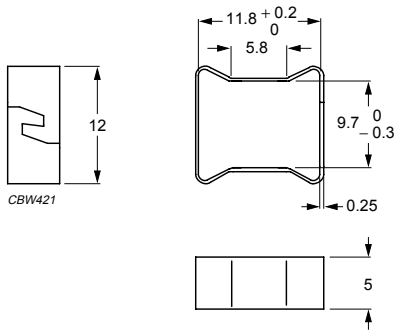

Dimensions in mm.

Fig.7 Mounting clip CLI-EP10.

CORE SETS

Effective core parameters

SYMBOL	PARAMETER	VALUE	UNIT
$\Sigma(l/A)$	core factor (C1)	1.24	mm^{-1}
V_e	effective volume	472	mm^3
l_e	effective length	24.2	mm
A_e	effective area	19.5	mm^2
A_{min}	minimum area	14.9	mm^2
m	mass of core set	≈ 4.7	g

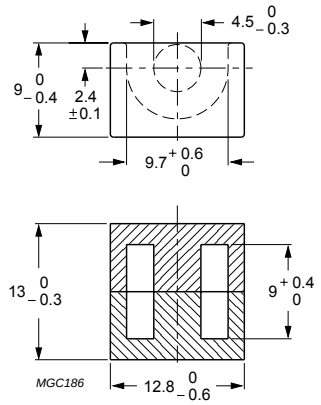

Dimensions in mm.

Fig.1 EP13 core set.

Core sets for filter applications

Clamping force for A_L measurements, 30 ±10 N.

GRADE	A_L (nH)	μ_e	AIR GAP (μm)	TYPE NUMBER
3B46 des	2150 ±25%	≈ 2090	≈ 0	EP13-3B46

Core sets for general purpose transformers and power applications

Clamping force for A_L measurements, 30 ±10 N.

GRADE	A_L (nH)	μ_e	TOTAL AIR GAP (μm)	TYPE NUMBER
3C81	40 ±3%	≈ 40	≈ 1000	EP13-3C81-E40
	63 ±3%	≈ 62	≈ 540	EP13-3C81-A63
	100 ±3%	≈ 99	≈ 300	EP13-3C81-A100
	160 ±3%	≈ 158	≈ 170	EP13-3C81-A160
	250 ±5%	≈ 247	≈ 100	EP13-3C81-A250
	1700 ±25%	≈ 1680	≈ 0	EP13-3C81
3C91 des	1700 ±25%	≈ 1680	≈0	EP13-3C91
3C94	40 ±3%	≈ 40	≈ 1000	EP13-3C94-E40
	63 ±3%	≈ 62	≈ 540	EP13-3C94-A63
	100 ±3%	≈ 99	≈ 300	EP13-3C94-A100
	160 ±3%	≈ 158	≈ 170	EP13-3C94-A160
	250 ±5%	≈ 247	≈ 100	EP13-3C94-A250
	1650 ±25%	≈ 1630	≈ 0	EP13-3C94

GRADE	A_L (nH)	μ_e	TOTAL AIR GAP (μm)	TYPE NUMBER
3C96 des	1500 ±25%	≈ 1480	≈ 0	EP13-3C96
3F3	40 ±3%	≈ 40	≈ 1000	EP13-3F3-E40
	63 ±3%	≈ 62	≈ 540	EP13-3F3-A63
	100 ±3%	≈ 99	≈ 300	EP13-3F3-A100
	160 ±3%	≈ 158	≈ 170	EP13-3F3-A160
	250 ±5%	≈ 247	≈ 100	EP13-3F3-A250
	1325 ±25%	≈ 1310	≈ 0	EP13-3F3
3F35 des	1100 ±25%	≈ 1090	≈ 0	EP13-3F35

Core sets of high permeability grades

Clamping force for A_L measurements, 30 ±10 N.

GRADE	A_L (nH)	μ_e	AIR GAP (μm)	TYPE NUMBER
3E27	4600 ± 25%	≈ 4540	≈ 0	EP13-3E27
3E5	7000 +40/-30%	≈ 6900	≈ 0	EP13-3E5
3E55 des	100 ±3%	≈ 99	≈ 310	EP13-3E55-A100
	160 ±3%	≈ 158	≈ 180	EP13-3E55-A160
	250 ±5%	≈ 247	≈ 110	EP13-3E55-A250
	315 ±5%	≈ 311	≈ 80	EP13-3E55-A315
	400 ±8%	≈ 395	≈ 65	EP13-3E55-A400
	630 ±15%	≈ 622	≈ 40	EP13-3E55-A630
	7000 +40/-30%	≈ 6900	≈ 0	EP13-3E55
3E6	8500 +40/-30%	≈ 8400	≈ 0	EP13-3E6

Properties of core sets under power conditions

GRADE	B (mT) at	CORE LOSS (W) at			
	H = 250 A/m; f = 25 kHz; T = 100 °C	f = 25 kHz; $\hat{B}$ = 200 mT; T = 100 °C	f = 100 kHz; $\hat{B}$ = 100 mT; T = 100 °C	f = 100 kHz; $\hat{B}$ = 200 mT; T = 100 °C	f = 400 kHz; $\hat{B}$ = 50 mT; T = 100 °C
3C81	≥315	≤ 0.1	–	–	–
3C91	≥315	–	≤ 0.03(1)	≤ 0.17(1)	–
3C94	≥320	–	≤ 0.04	≤ 0.22	–
3C96	≥340	–	≤ 0.03	≤ 0.17	≤ 0.075
3F35	≥300	–	–	–	≤ 0.04
3F3	≥315	–	≤ 0.05	–	≤ 0.1

Properties of core sets under power conditions (continued)

GRADE	B (mT) at	CORE LOSS (W) at			
	H = 250 A/m; f = 25 kHz; T = 100 °C	f = 500 kHz; $\hat{B}$ = 50 mT; T = 100 °C	f = 500 kHz; $\hat{B}$ = 100 mT; T = 100 °C	f = 1 MHz; $\hat{B}$ = 30 mT; T = 100 °C	f = 3 MHz; $\hat{B}$ = 10 mT; T = 100 °C
3C81	≥315	–	–	–	–
3C91	≥315	–	–	–	–
3C94	≥320	–	–	–	–
3C96	≥340	≤ 0.15	–	–	–
3F35	≥300	≤ 0.06	≤ 0.45	–	–
3F3	≥315	–	–	–	–

Note

1. Measured at 60 °C.

COIL FORMERS

General data

PARAMETER	SPECIFICATION
Coil former material	phenolformaldehyde (PF), glass-reinforced, flame retardant in accordance with *"UL 94V-0"*; UL file number: E41429(M)
Pin material	copper clad steel, tin (Sn) plated
Maximum operating temperature	180 °C, *"IEC 60085"*, class H
Resistance to soldering heat	*"IEC 60068-2-20"*, Part 2, Test Tb, method 1B: 350 °C, 3.5 s
Solderability	*"IEC 60068-2-20"*, Part 2, Test Ta, method 1: 235 °C, 2 s

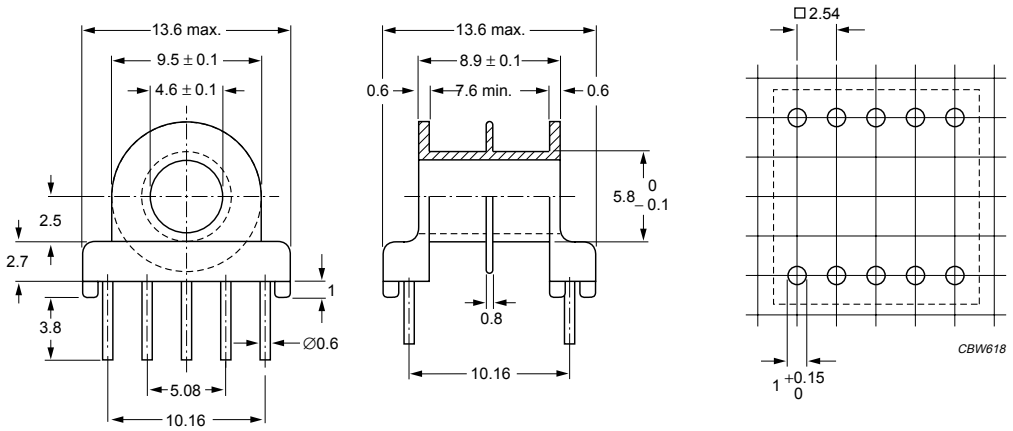

Dimensions in mm.

Fig.2 EP13 coil former; 10-pins.

Winding data and area product for 10-pins EP13 coil former

NUMBER OF SECTIONS	WINDING AREA (mm^2)	MINIMUM WINDING WIDTH (mm)	AVERAGE LENGTH OF TURN (mm)	AREA PRODUCT Ae x Aw (mm^4)	TYPE NUMBER
1	13.6	7.6	23.8	265	CSH-EP13-1S-10P
2	2 × 6.1	2 × 3.4	23.8	2 x 119	CSH-EP13-2S-10P

General data CSHS-EP13-1S-10P-T

PARAMETER	SPECIFICATION
Coil former material	phenolformaldehyde (PF), glass-reinforced, flame retardant in accordance with *"UL 94V-0"*; UL file number E41429 (M)
Pin material	copper-clad steel, tin (Sn) plated
Maximum operating temperature	155 °C, *"IEC 60085"*, class F
Resistance to soldering heat	*"IEC 60068-2-20"*, Part 2, Test Tb, method 1B, 350 °C, 3.5 s
Solderability	*"IEC 60068-2-20"*, Part 2, Test Ta, method 1, 235 °C, 2 s

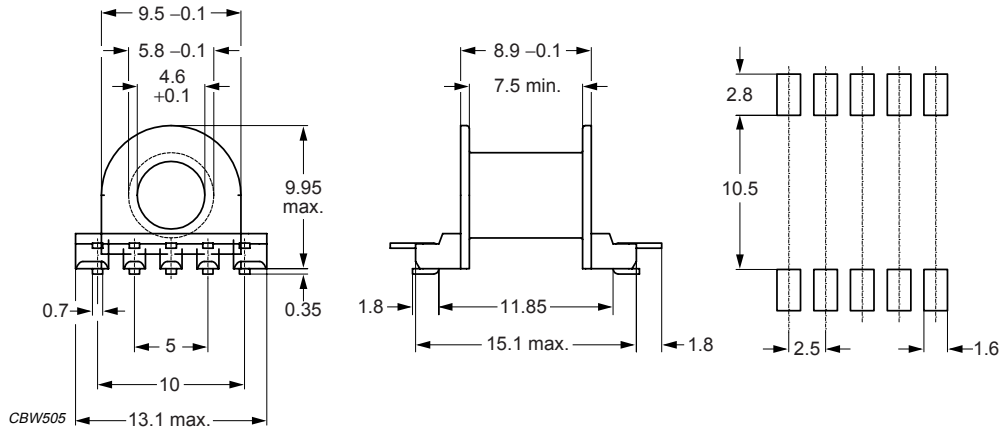

Dimensions in mm.

Fig.3 EP13 coil former.

Winding data and area product for EP13 coil former

NUMBER OF SECTIONS	MINIMUM WINDING AREA (mm^2)	NOMINAL WINDING WIDTH (mm)	AVERAGE LENGTH OF TURN (mm)	AREA PRODUCT Ae x Aw (mm^4)	TYPE NUMBER
1	13.5	7.5	23.8	263	CSHS-EP13-1S-10P-T

MOUNTING PARTS

General data

ITEM	REMARKS	FIGURE	TYPE NUMBER
Clasp	copper-nickel-zinc alloy (nickel silver), tin (Sb) plated	4	CLA-EP13
Spring	copper-nickel-zinc alloy (nickel silver)	5	SPR-EP13
Clip	stainless steel (CrNi); clamping force ≈32 N	6	CLI-EP13

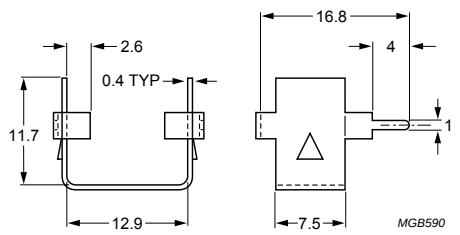

Dimensions in mm.

Fig.4 Mounting clasp CLA-EP13.

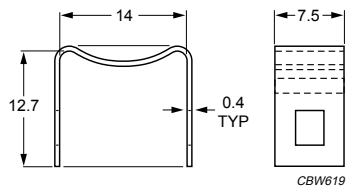

Dimensions in mm.

Fig.5 Mounting spring SPR-EP13.

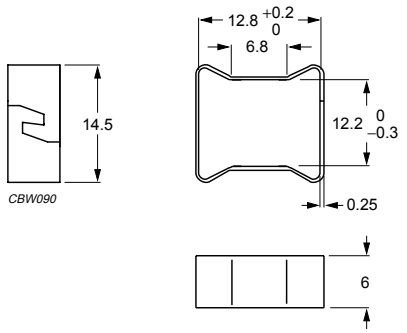

Dimensions in mm.

Fig.6 Mounting clip CLI-EP13.

CORE SETS

Effective core parameters

SYMBOL	PARAMETER	VALUE	UNIT
$\Sigma(l/A)$	core factor (C1)	0.870	mm^{-1}
V_e	effective volume	999	mm^3
l_e	effective length	29.5	mm
A_e	effective area	33.7	mm^2
A_{min}	minimum area	25.5	mm^2
m	mass of set	≈ 12	g

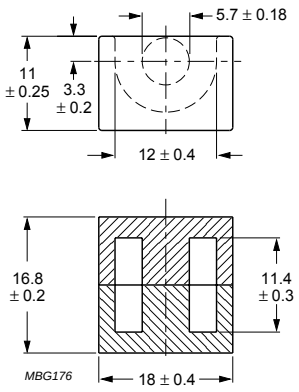

Dimensions in mm.

Fig.1 EP17 core set.

Core sets for general purpose transformers and power applications

Clamping force for A_L measurements, 40 ±10 N.

GRADE	A_L (nH)	μ_e	TOTAL AIR GAP (μm)	TYPE NUMBER
3C81	63 ±3%	≈ 44	≈ 1020	EP17-3C81-E63
	100 ±3%	≈ 70	≈ 560	EP17-3C81-A100
	160 ±3%	≈ 111	≈ 310	EP17-3C81-A160
	250 ±3%	≈ 174	≈ 180	EP17-3C81-A250
	315 ±5%	≈ 219	≈ 135	EP17-3C81-A315
	2670 ±25%	≈ 1860	≈ 0	EP17-3C81
3C91 des	2670 ±25%	≈ 1860	≈ 0	EP17-3C91
3C94	63 ±3%	≈ 44	≈ 1020	EP17-3C94-E63
	100 ±3%	≈ 70	≈ 560	EP17-3C94-A100
	160 ±3%	≈ 111	≈ 310	EP17-3C94-A160
	250 ±3%	≈ 174	≈ 180	EP17-3C94-A250
	315 ±5%	≈ 219	≈ 135	EP17-3C94-A315
	2500 ±25%	≈ 1740	≈ 0	EP17-3C94
3C96 des	2200 ±25%	≈ 1530	≈ 0	EP17-3C96

GRADE	A_L (nH)	μ_e	TOTAL AIR GAP (μm)	TYPE NUMBER
3F3	63 ±3%	≈ 44	≈ 1020	EP17-3F3-E63
	100 ±3%	≈ 70	≈ 560	EP17-3F3-A100
	160 ±3%	≈ 111	≈ 310	EP17-3F3-A160
	250 ±3%	≈ 174	≈ 180	EP17-3F3-A250
	315 ±5%	≈ 219	≈ 135	EP17-3F3-A315
	2200 ±25%	≈ 1530	≈ 0	EP17-3F3

Core sets of high permeability grades

Clamping force for A_L measurements, 40 ±10 N.

GRADE	A_L (nH)	μ_e	AIR GAP (μm)	TYPE NUMBER
3E27	7100 ± 25%	≈ 4950	≈0	EP17-3E27

Properties of core sets under power conditions

GRADE	B (mT) at	CORE LOSS (W) at			
	H = 250 A/m; f = 25 kHz; T = 100 °C	f = 25 kHz; $\hat{B}$ = 200 mT; T = 100 °C	f = 100 kHz; $\hat{B}$ = 100 mT; T = 100 °C	f = 100 kHz; $\hat{B}$ = 200 mT; T = 100 °C	f = 400 kHz; $\hat{B}$ = 50 mT; T = 100 °C
3C81	≥315	≤ 0.23	–	–	–
3C91	≥315	–	≤ 0.06(1)	≤ 0.36(1)	–
3C94	≥320	–	≤ 0.08	≤ 0.45	–
3C96	≥340	–	≤ 0.06	≤ 0.36	≤ 0.15
3F3	≥315	–	≤ 0.15	–	≤ 0.2

Properties of core sets under power conditions (continued)

GRADE	B (mT) at	CORE LOSS (W) at			
	H = 250 A/m; f = 25 kHz; T = 100 °C	f = 500 kHz; $\hat{B}$ = 50 mT; T = 100 °C	f = 500 kHz; $\hat{B}$ = 100 mT; T = 100 °C	f = 1 MHz; $\hat{B}$ = 30 mT; T = 100 °C	f = 3 MHz; $\hat{B}$ = 10 mT; T = 100 °C
3C81	≥315	–	–	–	–
3C91	≥315	–	–	–	–
3C94	≥320	–	–	–	–
3C96	≥340	≤ 0.3	–	–	–
3F3	≥315	–	–	–	–

Note

1. Measured at 60 °C.

COIL FORMER

General data

PARAMETER	SPECIFICATION
Coil former material	phenolformaldehyde (PF), glass-reinforced, flame retardant in accordance with *"UL 94V-0"*; UL file number E41429 (M)
Pin material	copper clad steel, tin (Sn) plated
Maximum operating temperature	180 °C, *"IEC 60085"*, class H
Resistance to soldering heat	*"IEC 60068-2-20"*, Part 2, Test Tb, method 1B: 350 °C, 3.5 s
Solderability	*"IEC 60068-2-20"*, Part 2, Test Ta, method 1: 235 °C, 2 s

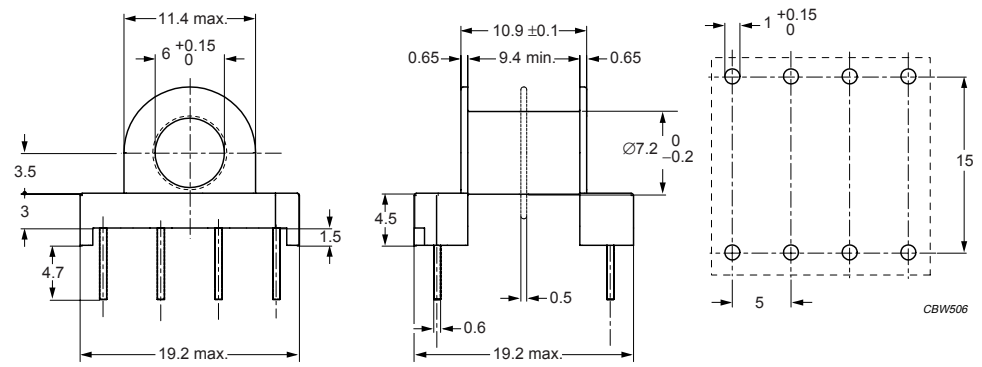

Dimensions in mm.

Fig.2 EP17 coil former: 8-pins.

Winding data and area product for 8-pins EP17 coil former

NUMBER OF SECTIONS	MINIMUM WINDING AREA (mm^2)	NOMINAL WINDING WIDTH (mm)	AVERAGE LENGTH OF TURN (mm)	AREA PRODUCT Ae x Aw (mm^4)	TYPE NUMBER
1	18.0	9.45	28.9	607	CSH-EP17-1S-8P
2	2 × 8.3	2 × 4.6	28.9	2 x 280	CSH-EP17-2S-8P

MOUNTING PARTS

General data

ITEM	REMARKS	FIGURE	TYPE NUMBER
Clasp	copper-tin alloy (CuSn), tin (Sn) plated	3	CLA-EP17
Spring	copper-tin alloy (CuSn), tin (Sn) plated	4	SPR-EP17

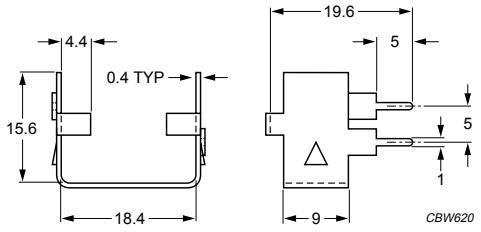

Dimensions in mm.

Fig.3 Mounting clasp CLA-EP17.

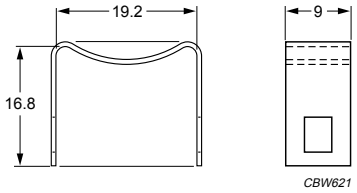

Dimensions in mm.

Fig.4 Mounting spring SPR-EP17.

CORE SETS

Effective core parameters

SYMBOL	PARAMETER	VALUE	UNIT
$\Sigma(l/A)$	core factor (C1)	0.520	mm^{-1}
V_e	effective volume	3230	mm^3
l_e	effective length	41.1	mm
A_e	effective area	78.7	mm^2
A_{min}	minimum area	60.8	mm^2
m	mass of set	≈27	g

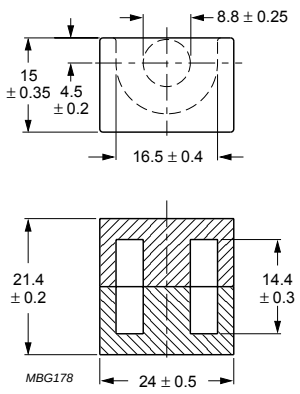

Dimensions in mm.

Fig.1 EP20 core set.

Core sets for general purpose transformers and power applications

Clamping force for A_L measurements, 60 ±20 N.

GRADE	A_L (nH)	μ_e	TOTAL AIR GAP (μm)	TYPE NUMBER
3C81	160 ±3%	≈ 67	≈ 790	EP20-3C81-E160
	250 ±3%	≈ 104	≈ 460	EP20-3C81-A250
	315 ±3%	≈ 131	≈ 350	EP20-3C81-A315
	400 ±3%	≈ 166	≈ 260	EP20-3C81-A400
	630 ±5%	≈ 262	≈ 150	EP20-3C81-A630
	4900 ±25%	≈ 2040	≈ 0	EP20-3C81
3C91 des	4900 ±25%	≈ 2040	≈ 0	EP20-3C91
3C94	160 ±3%	≈ 67	≈ 790	EP20-3C94-E160
	250 ±3%	≈ 104	≈ 460	EP20-3C94-A250
	315 ±3%	≈ 131	≈ 350	EP20-3C94-A315
	400 ±3%	≈ 166	≈ 260	EP20-3C94-A400
	630 ±5%	≈ 262	≈ 150	EP20-3C94-A630
	4435 ±25%	≈ 1840	≈ 0	EP20-3C94
3C96 des	3850 ±25%	≈ 1600	≈ 0	EP20-3C96

GRADE	A_L (nH)	μ_e	TOTAL AIR GAP (μm)	TYPE NUMBER
3F3	160 ±3%	≈ 67	≈ 790	EP20-3F3-E160
	250 ±3%	≈ 104	≈ 460	EP20-3F3-A250
	315 ±3%	≈ 131	≈ 350	EP20-3F3-A315
	400 ±3%	≈ 166	≈ 260	EP20-3F3-A400
	630 ±5%	≈ 262	≈ 150	EP20-3F3-A630
	3550 ±25%	≈ 1480	≈ 0	EP20-3F3

Properties of core sets under power conditions

GRADE	B (mT) at	CORE LOSS (W) at			
	H = 250 A/m; f = 25 kHz; T = 100 °C	f = 25 kHz; $\hat{B}$ = 200 mT; T = 100 °C	f = 100 kHz; $\hat{B}$ = 100 mT; T = 100 °C	f = 100 kHz; $\hat{B}$ = 200 mT; T = 100 °C	f = 400 kHz; $\hat{B}$ = 50 mT; T = 100 °C
3C81	≥315	≤ 0.75	–	–	–
3C91	≥315	–	≤ 0.2[1]	≤ 1.3[1]	–
3C94	≥320	–	≤ 0.25	≤ 1.6	–
3C96	≥340	–	≤ 0.2	≤ 1.3	≤ 0.5
3F3	≥315	–	≤ 0.36	–	≤ 0.62

Properties of core sets under power conditions (continued)

GRADE	B (mT) at	CORE LOSS (W) at			
	H = 250 A/m; f = 25 kHz; T = 100 °C	f = 500 kHz; $\hat{B}$ = 50 mT; T = 100 °C	f = 500 kHz; $\hat{B}$ = 100 mT; T = 100 °C	f = 1 MHz; $\hat{B}$ = 30 mT; T = 100 °C	f = 3 MHz; $\hat{B}$ = 10 mT; T = 100 °C
3C81	≥315	–	–	–	–
3C91	≥315	–	–	–	–
3C94	≥320	–	–	–	–
3C96	≥340	≤ 1.0	–	–	–
3F3	≥315	–	–	–	–

Note

1. Measured at 60 °C.

COIL FORMER

General data

PARAMETER	SPECIFICATION
Coil former material	phenolformaldehyde (PF), glass-reinforced, flame retardant in accordance with *"UL 94V-0"*; UL file number E41429(M)
Pin material	copper-clad steel, tin (Sn) plated
Maximum operating temperature	180 °C, *"IEC 60085"*, class H
Resistance to soldering heat	*"IEC 60068-2-20"*, Part 2, Test Tb, method 1B: 350 °C, 3.5 s
Solderability	*"IEC 60068-2-20"*, Part 2, Test Ta, method 1: 235 °C, 2 s

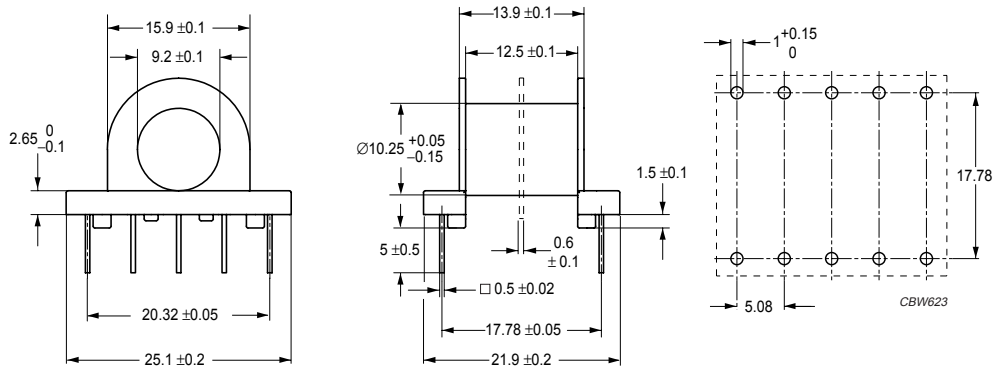

Dimensions in mm.

Fig.2 EP20 coil former: 10-pins.

Winding data and area product for 10-pins EP20 coil former

NUMBER OF SECTIONS	MINIMUM WINDING AREA (mm^2)	NOMINAL WINDING WIDTH (mm)	AVERAGE LENGTH OF TURN (mm)	AREA PRODUCT Ae x Aw (mm^4)	TYPE NUMBER
1	40.3	12.4	39.4	3170	CSH-EP20-1S-10P-T
2	2 x 19.0	2 x 5.95	39.4	2 x 1500	CSH-EP20-2S-10P-T

MOUNTING PARTS

General data

ITEM	REMARKS	FIGURE	TYPE NUMBER
Clasp	steel, tin (Sn) plated (thickness 3-5 microns)	3	CLA-EP20-Z
Spring	copper-tin alloy (CuSn), tin (Sn) plated	4	SPR-EP20-Z

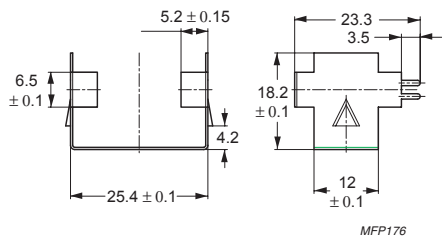

Dimensions in mm.

Fig.3 Mounting clasp CLA-EP20.

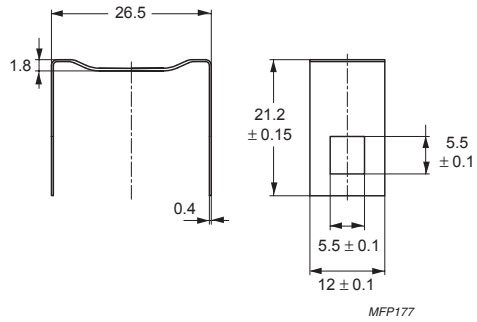

Dimensions in mm.

Fig.4 Mounting spring SPR-EP20.

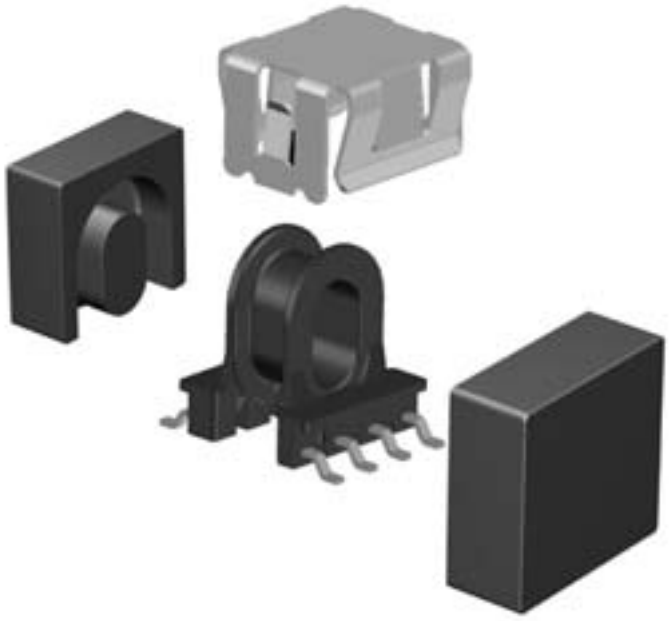

MFW063

PRODUCT OVERVIEW AND TYPE NUMBER STRUCTURE

Product overview EPX cores

CORE TYPE	V_e (mm^3)	A_e (mm^2)	MASS (g)
EPX7	255	16.5	2.1
EPX8	279	16.4	2.3
EPX9	304	16.3	2.5
EPX10	325	15.0	2.5

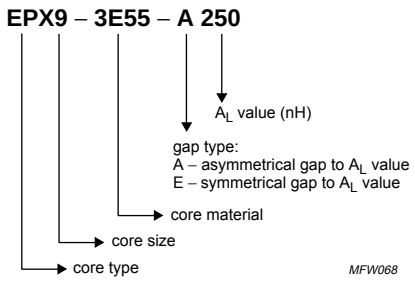

Fig.1 Type number structure for cores.

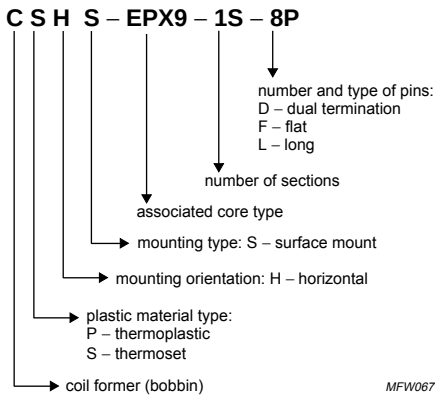

Fig.2 Type number structure for coil formers.

CORE SETS

Effective core parameters

SYMBOL	PARAMETER	VALUE	UNIT
$\Sigma(l/A)$	core factor (C1)	0.931	mm^{-1}
V_e	effective volume	255	mm^3
l_e	effective length	15.4	mm
A_e	effective area	16.5	mm^2
A_{min}	minimum area	14.5	mm^2
m	mass of core set	≈ 2.1	g

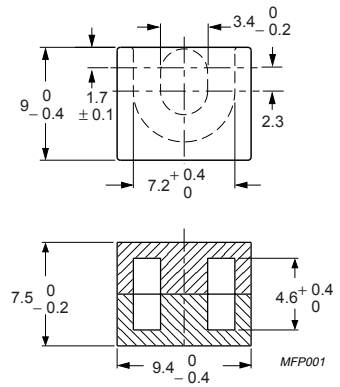

Dimensions in mm.

Fig.1 EPX7 core set.

Core sets for general purpose transformers and power applications

Clamping force for A_L measurements, 30 ± 10 N.

GRADE	A_L (nH)	μ_e	AIR GAP (μm)	TYPE NUMBER
3C94	1950 ± 25 %	≈ 1440	≈0	EPX7-3C94
3C96 des	1750 ± 25 %	≈ 1300	≈0	EPX7-3C96
3F35 des	1400 ± 25 %	≈ 1040	≈0	EPX7-3F35

Core sets for filter applications

Clamping force for A_L measurements, 30 ± 10 N.

GRADE	A_L (nH)	μ_e	AIR GAP (μm)	TYPE NUMBER
3B46 des	2500 ± 25 %	≈ 1850	≈0	EPX7-3B46

Core sets of high permeability grades

Clamping force for A_L measurements, 30 ± 10 N.

GRADE	A_L (nH)	μ_e	AIR GAP (μm)	TYPE NUMBER
3E55 des	63 ± 3 %	≈ 47	≈ 450	EPX7-3E55-A63
	100 ± 3 %	≈ 74	≈ 250	EPX7-3E55-A100
	160 ± 3 %	≈ 119	≈ 150	EPX7-3E55-A160
	250 ± 5 %	≈ 185	≈ 90	EPX7-3E55-A250
	315 ± 5 %	≈ 233	≈ 70	EPX7-3E55-A315
	400 ± 8 %	≈ 296	≈ 50	EPX7-3E55-A400
	8400 + 40 / – 30 %	≈ 6220	≈0	EPX7-3E55
3E6	9300 + 40 / – 30 %	≈ 6890	≈0	EPX7-3E6

Properties under power conditions

GRADE	B (mT) at	CORE LOSS (W) at			
	H = 250 A/m; f = 10 kHz; T = 100 °C	f = 100 kHz; $\hat{B}$ = 100 mT; T = 100 °C	f = 100 kHz; $\hat{B}$ = 200 mT; T = 100 °C	f = 500 kHz; $\hat{B}$ = 50 mT; T = 100 °C	f = 500 kHz; $\hat{B}$ = 100 mT; T = 100 °C
3C94	≥ 320	≤ 0.02	≤ 0.13	–	–
3C96	≥ 340	≤ 0.015	≤ 0.1	≤ 0.08	–
3F35	≥ 300	–	–	≤ 0.03	≤ 0.25

COIL FORMERS

General data

PARAMETER	SPECIFICATION
Coil former material	Sumikon PM9630 (PF), glass-reinforced, flame retardant in accordance with *"UL 94V-0";* UL file number E41429(M)
Pin material	copper-tin alloy (CuSn), nickel flash, gold plated
Maximum operating temperature	180 °C, *"IEC 60085"*, class H
Resistance to soldering heat	*"IEC 60068-2-20"*, Part 2, Test Tb, method 1B, 350 °C, 3.5 s
Solderability	*"IEC 60068-2-20"*, Part 2, Test Ta, method 1, 235 °C, 2 s

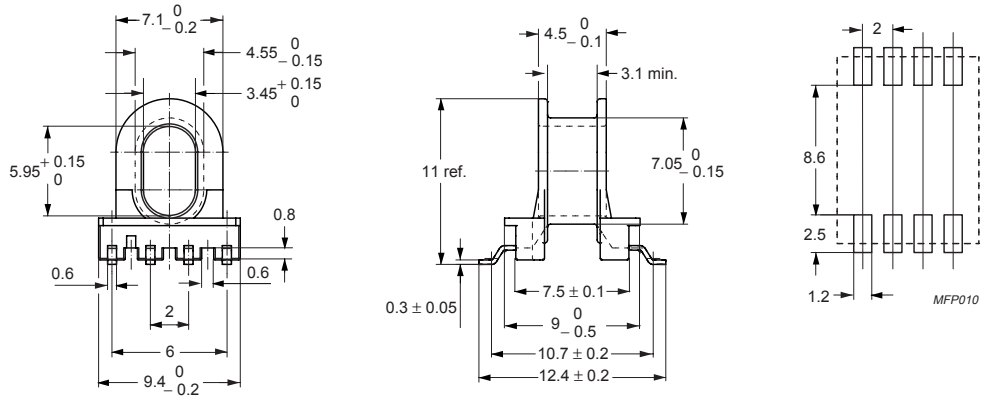

Dimensions in mm.

Fig.2 EPX7 coil former: 8-pads, 2 mm pad distance.

Winding data and area product for 8-pads EPX7 coil former

NUMBER OF SECTIONS	WINDING AREA (mm^2)	NOMINAL WINDING WIDTH (mm)	AVERAGE LENGTH OF TURN (mm)	AREA PRODUCT Ae x Aw (mm^4)	TYPE NUMBER
1	3.64	3.4	23.3	60.1	CSHS-EPX7-1S-8P-T

General data CSHS-EPX7-1S-8P

PARMETER	SPECIFICATION
Coil former material	Sumikon PM9630 (PF), glass-reinforced, flame retardant in accordance with *"UL 94V-0";* UL file number E41429(M)
Pin material	copper-tin alloy (CuSn), nickel flash, gold plated
Maximum operating temperature	180 °C, *"IEC 60085"*, class H
Resistance to soldering heat	*"IEC 60068-2-20"*, Part 2, Test Tb, method 1B, 350 °C, 3.5 s
Solderability	*"IEC 60068-2-20"*, Part 2, Test Ta, method 1, 235 °C, 2 s

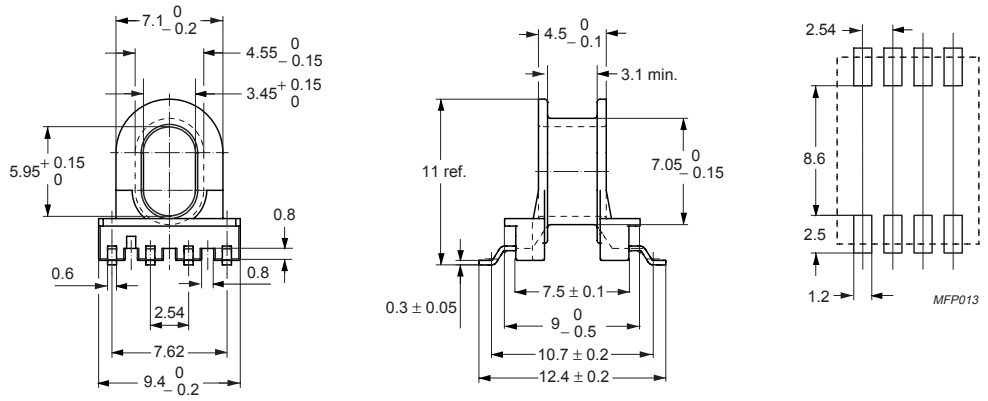

Dimensions in mm.

Fig.3 EPX7 coil former: 8-pads, 2.54 mm pad distance.

Winding data and area product for 8-pads EPX7 coil former

NUMBER OF SECTIONS	MINIMUM WINDING AREA (mm^2)	NOMINAL WINDING WIDTH (mm)	AVERAGE LENGTH OF TURN (mm)	AREA PRODUCT Ae x Aw (mm^4)	TYPE NUMBER
1	3.64	3.4	23.3	60.1	CSHS-EPX7-1S-8P

MOUNTING PARTS

General data

ITEM	REMARKS	FIGURE	TYPE NUMBER
Mounting clamp	stainless steel (CrNi); to be used in combination with CSHS-EPX7-1S-8P or CSHS-EPX7-1S-8P-T	4	CLM-EPX7

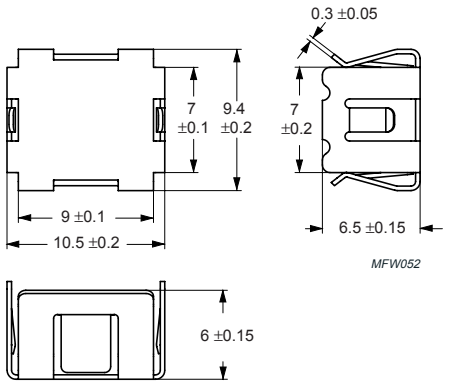

Dimensions in mm.

Fig.4 Mounting clamp CLM-EPX7.

CORE SETS

Effective core parameters

SYMBOL	PARAMETER	VALUE	UNIT
Σ(l/A)	core factor (C1)	1.04	mm^{-1}
V_e	effective volume	279	mm^3
l_e	effective length	17.0	mm
A_e	effective area	16.4	mm^2
A_{min}	minimum area	14.5	mm^2
m	mass of core set	≈ 2.3	g

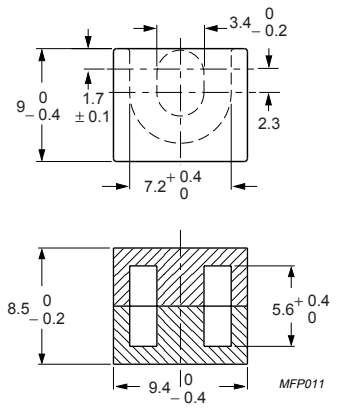

Dimensions in mm.

Fig.1 EPX8 core set.

Core sets for general purpose transformers and power applications

Clamping force for A_L measurements, 30 ± 10 N.

GRADE	A_L (nH)	μ_e	AIR GAP (μm)	TYPE NUMBER
3C94	1800 ± 25 %	≈ 1490	≈0	EPX8-3C94
3C96 des	1650 ± 25 %	≈ 1365	≈0	EPX8-3C96
3F35 des	1300 ± 25 %	≈ 1075	≈0	EPX8-3F35

Core sets for filter applications

Clamping force for A_L measurements, 30 ± 10 N.

GRADE	A_L (nH)	μ_e	AIR GAP (μm)	TYPE NUMBER
3B46 des	2400 ± 25 %	≈ 1990	≈0	EPX8-3B46

Core sets of high permeability grades

Clamping force for A_L measurements, 30 ± 10 N.

GRADE	A_L (nH)	μ_e	AIR GAP (μm)	TYPE NUMBER
3E55 des	63 ± 3 %	≈ 52	≈ 440	EPX8-3E55-A63
	100 ± 3 %	≈ 83	≈ 250	EPX8-3E55-A100
	160 ± 3 %	≈ 132	≈ 150	EPX8-3E55-A160
	250 ± 5 %	≈ 207	≈ 90	EPX8-3E55-A250
	315 ± 5 %	≈ 261	≈ 70	EPX8-3E55-A315
	400 ± 8 %	≈ 331	≈ 50	EPX8-3E55-A400
	7800 + 40 / – 30 %	≈ 6455	≈0	EPX8-3E55
3E6	8700 + 40 / – 30 %	≈ 7200	≈0	EPX8-3E6

Properties under power conditions

GRADE	B (mT) at	CORE LOSS (W) at			
	H = 250 A/m; f = 10 kHz; T = 100 °C	f = 100 kHz; $\hat{B}$ = 100 mT; T = 100 °C	f = 100 kHz; $\hat{B}$ = 200 mT; T = 100 °C	f = 500 kHz; $\hat{B}$ = 50 mT; T = 100 °C	f = 500 kHz; $\hat{B}$ = 100 mT; T = 100 °C
3C94	≥ 320	≤ 0.022	≤ 0.14	–	–
3C96	≥ 340	≤ 0.017	≤ 0.11	≤ 0.09	–
3F35	≥ 300	–	–	≤ 0.032	≤ 0.27

CORE SETS

Effective core parameters

SYMBOL	PARAMETER	VALUE	UNIT
$\Sigma(l/A)$	core factor (C1)	1.15	mm^{-1}
V_e	effective volume	304	mm^3
l_e	effective length	18.7	mm
A_e	effective area	16.3	mm^2
A_{min}	minimum area	14.5	mm^2
m	mass of core set	≈ 2.5	g

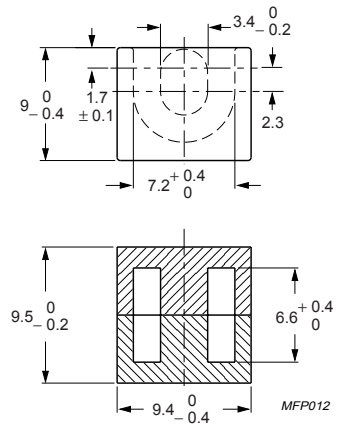

Dimensions in mm.

Fig.1 EPX9 core set.

Core sets for general purpose transformers and power applications

Clamping force for A_L measurements, 30 ± 10 N.

GRADE	A_L (nH)	μ_e	AIR GAP (μm)	TYPE NUMBER
3C94	1700 ± 25 %	≈ 1560	≈ 0	EPX9-3C94
3C96 des	1550 ± 25 %	≈ 1420	≈ 0	EPX9-3C96
3F35 des	1200 ± 25 %	≈ 1100	≈ 0	EPX9-3F35

Core sets for filter applications

Clamping force for A_L measurements, 30 ± 10 N.

GRADE	A_L (nH)	μ_e	AIR GAP (μm)	TYPE NUMBER
3B46 des	2300 ± 25 %	≈ 2110	≈ 0	EPX9-3B46

Core sets of high permeability grades

Clamping force for A_L measurements, 30 ± 10 N.

GRADE	A_L (nH)	μ_e	AIR GAP (μm)	TYPE NUMBER
3E55 des	63 ± 3 %	≈ 58	≈ 440	EPX9-3E55-A63
	100 ± 3 %	≈ 92	≈ 250	EPX9-3E55-A100
	160 ± 3 %	≈ 146	≈ 150	EPX9-3E55-A160
	250 ± 5 %	≈ 229	≈ 90	EPX9-3E55-A250
	315 ± 5 %	≈ 288	≈ 70	EPX9-3E55-A315
	400 ± 8 %	≈ 366	≈ 50	EPX9-3E55-A400
	7300 + 40 / – 30 %	≈ 6680	≈ 0	EPX9-3E55
3E6	8200 + 40 / – 30 %	≈ 7500	≈ 0	EPX9-3E6

Properties under power conditions

GRADE	B (mT) at	CORE LOSS (W) at			
	H = 250 A/m; f = 10 kHz; T = 100 °C	f = 100 kHz; $\hat{B}$ = 100 mT; T = 100 °C	f = 100 kHz; $\hat{B}$ = 200 mT; T = 100 °C	f = 500 kHz; $\hat{B}$ = 50 mT; T = 100 °C	f = 500 kHz; $\hat{B}$ = 100 mT; T = 100 °C
3C94	≥ 320	≤ 0.023	≤ 0.15	–	–
3C96	≥ 340	≤ 0.018	≤ 0.12	≤ 0.1	–
3F35	≥ 300	–	–	≤ 0.035	≤ 0.3

COIL FORMERS

General data

PARAMETER	SPECIFICATION
Coil former material	Sumikon PM9630 (PF), glass-reinforced, flame retardant in accordance with *"UL 94V-0";* UL file number E41429(M)
Pin material	copper-tin alloy (CuSn), nickel flash, gold plated
Maximum operating temperature	180 °C, *"IEC 60085"*, class H
Resistance to soldering heat	*"IEC 60068-2-20"*, Part 2, Test Tb, method 1B, 350 °C, 3.5 s
Solderability	*"IEC 60068-2-20"*, Part 2, Test Ta, method 1, 235 °C, 2 s

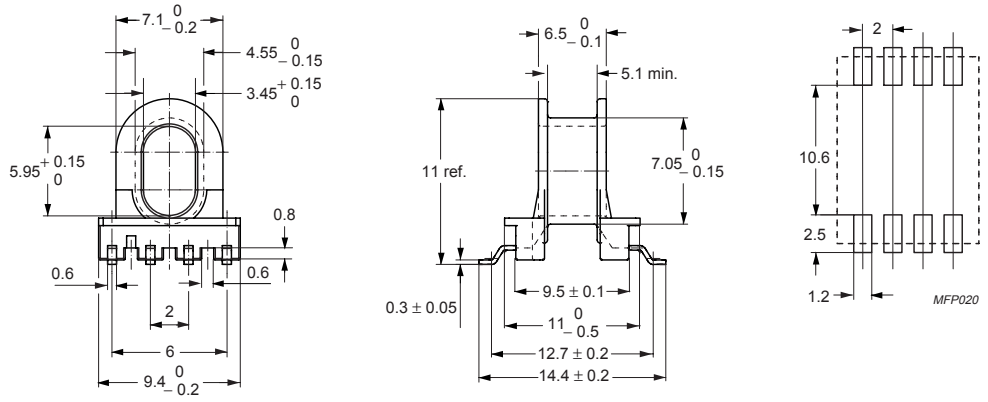

Dimensions in mm.

Fig.2 EPX9 coil former: 8-pads, 2 mm pad distance.

Winding data and area product for 8-pads EPX9 coil former

NUMBER OF SECTIONS	WINDING AREA (mm^2)	NOMINAL WINDING WIDTH (mm)	AVERAGE LENGTH OF TURN (mm)	AREA PRODUCT Ae x Aw (mm^4)	TYPE NUMBER
1	5.99	5.4	23.3	97.6	CSHS-EPX9-1S-8P-T

General data CSHS-EPX9-1S-8P

PARMETER	SPECIFICATION
Coil former material	Sumikon PM9630 (PF), glass-reinforced, flame retardant in accordance with *"UL 94V-0";* UL file number E41429(M)
Pin material	copper-tin alloy (CuSn), nickel flash, gold plated
Maximum operating temperature	180 °C, *"IEC 60085"*, class H
Resistance to soldering heat	*"IEC 60068-2-20"*, Part 2, Test Tb, method 1B, 350 °C, 3.5 s
Solderability	*"IEC 60068-2-20"*, Part 2, Test Ta, method 1, 235 °C, 2 s

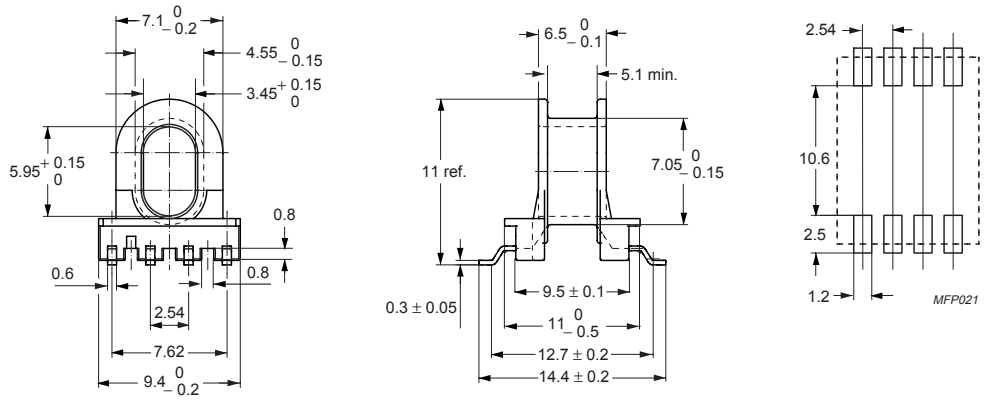

Dimensions in mm.

Fig.3 EPX9 coil former: 8-pads, 2.54 mm pad distance.

Winding data and area product for 8-pads EPX9 coil former

NUMBER OF SECTIONS	MINIMUM WINDING AREA (mm^2)	NOMINAL WINDING WIDTH (mm)	AVERAGE LENGTH OF TURN (mm)	AREA PRODUCT Ae x Aw (mm^4)	TYPE NUMBER
1	5.99	5.4	23.3	97.6	CSHS-EPX9-1S-8P

CORE SETS

Effective core parameters

SYMBOL	PARAMETER	VALUE	UNIT
Σ(l/A)	core factor (C1)	1.45	mm^{-1}
V_e	effective volume	325	mm^3
l_e	effective length	21.7	mm
A_e	effective area	15.0	mm^2
A_{min}	minimum area	12.5	mm^2
m	mass of core set	≈ 2.5	g

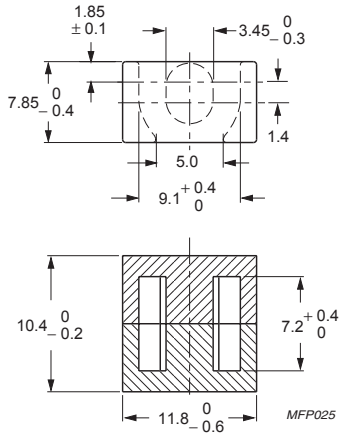

Dimensions in mm.

Fig.1 EPX10 core set.

Core sets for general purpose transformers and power applications

Clamping force for A_L measurements, 30 ± 10 N.

GRADE	A_L (nH)	μ_e	AIR GAP (μm)	TYPE NUMBER
3C94	1400 ± 25 %	≈ 1620	≈0	EPX10-3C94
3C96 des	1250 ± 25 %	≈ 1440	≈0	EPX10-3C96
3F35 des	950 ± 25 %	≈ 1100	≈0	EPX10-3F35

Core sets for filter applications

Clamping force for A_L measurements, 30 ± 10 N.

GRADE	A_L (nH)	μ_e	AIR GAP (μm)	TYPE NUMBER
3B46 des	1900 ± 25 %	≈ 2200	≈0	EPX10-3B46

Core sets of high permeability grades

Clamping force for A_L measurements, 30 ± 10 N.

GRADE	A_L (nH)	μ_e	AIR GAP (μm)	TYPE NUMBER
3E55 des	63 ± 3 %	≈ 73	≈ 410	EPX10-3E55-A63
	100 ± 3 %	≈ 115	≈ 230	EPX10-3E55-A100
	160 ± 3 %	≈ 185	≈ 135	EPX10-3E55-A160
	250 ± 5 %	≈ 288	≈ 80	EPX10-3E55-A250
	315 ± 5 %	≈ 363	≈ 60	EPX10-3E55-A315
	400 ± 8 %	≈ 462	≈ 50	EPX10-3E55-A400
	6000 + 40 / – 30 %	≈ 6920	≈0	EPX10-3E55
3E6	6600 + 40 / – 30 %	≈ 7620	≈0	EPX10-3E6

Properties of core sets under power conditions

GRADE	B (mT) at	CORE LOSS (W) at			
	H = 250 A/m; f = 10 kHz; T = 100 °C	f = 100 kHz; $\hat{B}$ = 100 mT; T = 100 °C	f = 100 kHz; $\hat{B}$ = 200 mT; T = 100 °C	f = 500 kHz; $\hat{B}$ = 50 mT; T = 100 °C	f = 500 kHz; $\hat{B}$ = 100 mT; T = 100 °C
3C94	≥ 320	≤ 0.025	≤ 0.16	–	–
3C96	≥ 340	≤ 0.018	≤ 0.13	≤ 0.1	–
3F35	≥ 300	–	–	≤ 0.04	≤ 0.3

Soft Ferrites

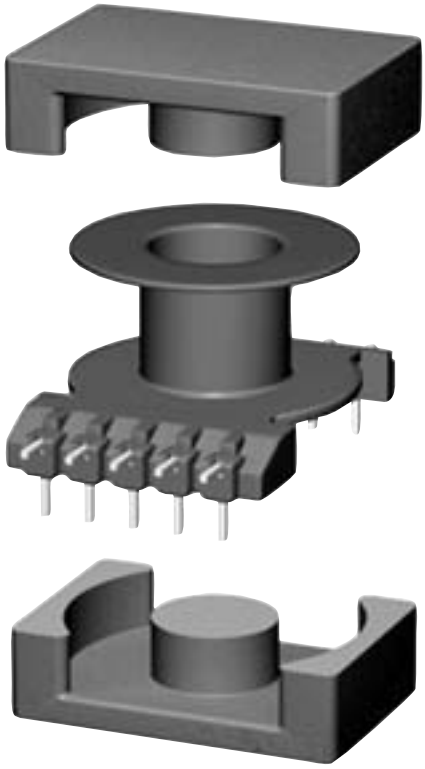

CBW586

PRODUCT OVERVIEW AND TYPE NUMBER STRUCTURE

Overview EQ cores and plates (PLT)

CORE TYPE	V_e (mm^3)	A_e (mm^2)	MASS (g)
EQ13	348	19.9	0.8
PLT13	315	19.8	0.6
EQ20/R	1960	59.0	5.1
PLT20/S	1500	59.8	3.0
EQ25	4145	100	11
EQ25/LP	2370(1)	89.7(1)	8.2
PLT25	–	–	4.9
EQ30	4970	108	13.2
PLT30	3400	108	7.6
EQ38/8/25	7900	152	21.5

Note:
(1) In combination with PLT25

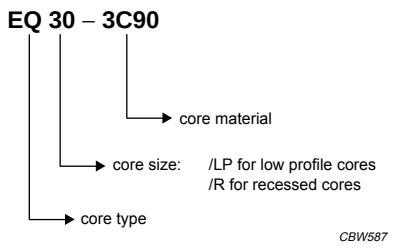

Fig.1 Type number structure for cores.

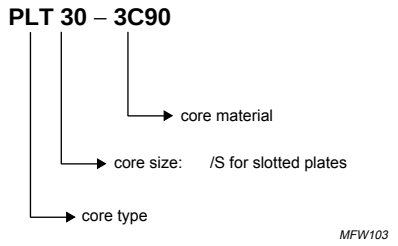

Fig.2 Type number structure for plates.

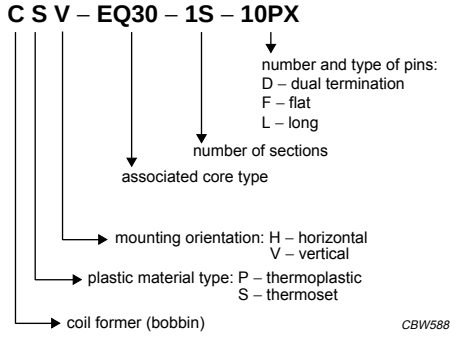

Fig. 3 Type number structure for coil formers.

CORES

Effective core parameters of a set of EQ cores

SYMBOL	PARAMETER	VALUE	UNIT
Σ(l/A)	core factor (C1)	0.911	mm^{-1}
V_e	effective volume	348	mm^3
l_e	effective length	17.5	mm
A_e	effective area	19.9	mm^2
A_{min}	minimum area	19.2	mm^2
m	mass of core half	≈ 0.8	g

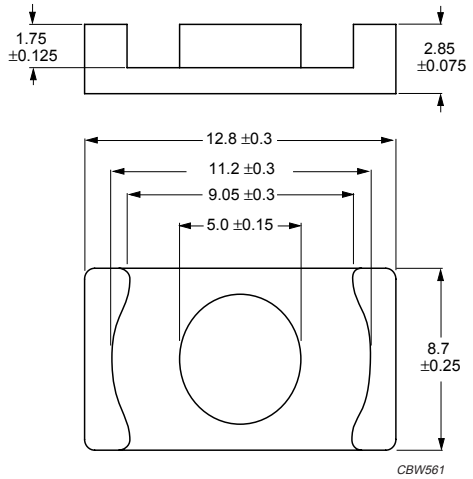

Dimensions in mm.

Fig.1 EQ13 core.

Effective core parameters of an EQ/PLT combination

SYMBOL	PARAMETER	VALUE	UNIT
Σ(l/A)	core factor (C1)	0.803	mm^{-1}
V_e	effective volume	315	mm^3
l_e	effective length	15.9	mm
A_e	effective area	19.8	mm^2
A_{min}	minimum area	19.2	mm^2
m	mass of plate	≈ 0.6	g

Ordering information for plates

GRADE	TYPE NUMBER
3C94	PLT13/9/1-3C94
3C95 des	PLT13/9/1-3C95
3C96 des	PLT13/9/1-3C96
3F35 des	PLT13/9/1-3F35
3F4 des	PLT13/9/1-3F4
3F45 prot	PLT13/9/1-3F45

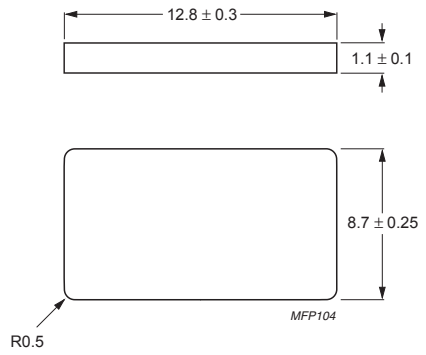

Dimensions in mm.

Fig.2 PLT13/9/1.

Core halves for use in combination with an EQ core

A_L measured in combination with a non-gapped core half, clamping force for A_L measurements, 10 ± 5 N.

GRADE	A_L (nH)	μ_e	AIR GAP (μm)	TYPE NUMBER
3C94	1700 ± 25 %	≈ 1230	≈ 0	EQ13-3C94
3C95 des	1930 ± 25 %	≈ 1350	≈ 0	EQ13-3C95
3C96 des	1600 ± 25 %	≈ 1160	≈ 0	EQ13-3C96
3F35 des	1300 ± 25 %	≈ 942	≈ 0	EQ13-3F35
3F4 des	950 ± 25 %	≈ 689	≈ 0	EQ13-3F4
3F45 prot	950 ± 25 %	≈ 689	≈ 0	EQ13-3F45

Core halves for use in combination with a plate (PLT)

A_L measured in combination with a plate (PLT), clamping force for A_L measurements, 10 ± 5 N.

GRADE	A_L (nH)	μ_e	AIR GAP (μm)	TYPE NUMBER
3C94	1800 ± 25 %	≈ 1150	≈ 0	EQ13-3C94
3C95 des	2030 ± 25 %	≈ 1300	≈ 0	EQ13-3C95
3C96 des	1700 ± 25 %	≈ 1085	≈ 0	EQ13-3C96
3F35 des	1350 ± 25 %	≈ 863	≈ 0	EQ13-3F35
3F4 des	1000 ± 25 %	≈ 639	≈ 0	EQ13-3F4
3F45 prot	1000 ± 25 %	≈ 639	≈ 0	EQ13-3F45

Properties of core sets under power conditions

CORE COMBINATION	B (mT) at	CORE LOSS (W) at			
	H = 250 A/m; f = 10 kHz; T = 100 °C	f = 100 kHz; $\hat{B}$ = 100 mT; T = 100 °C	f = 100 kHz; $\hat{B}$ = 200 mT; T = 25 °C	f = 100 kHz; $\hat{B}$ = 200 mT; T = 100 °C	f = 500 kHz; $\hat{B}$ = 50 mT; T = 100 °C
EQ+EQ13-3C94	≥ 320	≤ 0.031	–	≤ 0.21	–
EQ+PLT13-3C94	≥ 320	≤ 0.028	–	≤ 0.19	–
EQ+EQ13-3C95	≥ 320	–	≤ 0.19	≤ 0.18	–
EQ+PLT13-3C95	≥ 320	–	≤ 0.17	≤ 0.16	–
EQ+EQ13-3C96	≥ 340	≤ 0.023	–	≤ 0.16	≤ 0.13
EQ+PLT13-3C96	≥ 340	≤ 0.021	–	≤ 0.14	≤ 0.12
EQ+EQ13-3F35	≥ 300	–	–	–	≤ 0.047
EQ+PLT13-3F35	≥ 300	–	–	–	≤ 0.043

Properties of core sets under power conditions (continued)

CORE COMBINATION	B (mT) at	CORE LOSS (W) at			
	H = 250 A/m; f = 10 kHz; T = 100 °C	f = 500 kHz; $\hat{B}$ = 100 mT; T = 100 °C	f = 1 MHz; $\hat{B}$ = 30 mT; T = 100 °C	f = 1 MHz; $\hat{B}$ = 50 mT; T = 100 °C	f = 3 MHz; $\hat{B}$ = 10 mT; T = 100 °C
EQ+EQ13-3F35	≥ 300	≤ 0.36	–	–	–
EQ+PLT13-3F35	≥ 300	≤ 0.33	–	–	–
EQ+EQ13-3F4	≥ 300	–	≤ 0.1	–	≤ 0.17
EQ+PLT13-3F4	≥ 300	–	≤ 0.095	–	≤ 0.15
EQ+EQ13-3F45	≥ 300	–	≤ 0.08	≤ 0.3	≤ 0.14
EQ+PLT13-3F45	≥ 300	–	≤ 0.07	≤ 0.26	≤ 0.12

CORES

Effective core parameters of a set of EQ cores

SYMBOL	PARAMETER	VALUE	UNIT
$\Sigma(l/A)$	core factor (C1)	0.563	mm^{-1}
V_e	effective volume	1960	mm^3
l_e	effective length	33.2	mm
A_e	effective area	59.0	mm^2
A_{min}	minimum area	55.0	mm^2
m	mass of core half	≈ 5.1	g

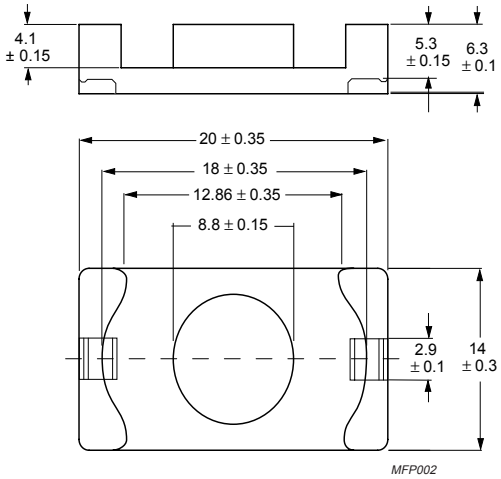

Dimensions in mm.

Fig.1 EQ20/R core.

Effective core parameters of an EQ/PLT combination

SYMBOL	PARAMETER	VALUE	UNIT
$\Sigma(l/A)$	core factor (C1)	0.420	mm^{-1}
V_e	effective volume	1500	mm^3
l_e	effective length	25.1	mm
A_e	effective area	59.8	mm^2
A_{min}	minimum area	55.0	mm^2
m	mass of plate	≈ 3.0	g

Ordering information for plates

GRADE	TYPE NUMBER
3C94	PLT20/14/2/S-3C94
3C95 des	PLT20/14/2/S-3C95
3C96 des	PLT20/14/2/S-3C96
3F35 des	PLT20/14/2/S-3F35
3F4 des	PLT20/14/2/S-3F4
3F45 prot	PLT20/14/2/S-3F45

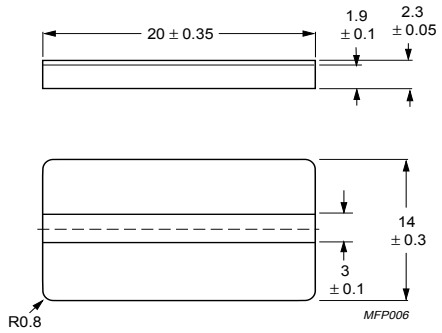

Dimensions in mm.

Fig.2 PLT20/14/2/S.

Core halves for use in combination with an EQ core

A_L measured in combination with a non-gapped core half, clamping force for A_L measurements, 30 ± 10 N.

GRADE	A_L (nH)	μ_e	AIR GAP (μm)	TYPE NUMBER
3C94	3500 ± 25 %	≈ 1570	≈ 0	EQ20/R-3C94
3C95 des	4160 ± 25 %	≈ 1865	≈ 0	EQ20/R-3C95
3C96 des	3150 ± 25 %	≈ 1410	≈ 0	EQ20/R-3C96
3F35 des	2400 ± 25 %	≈ 1075	≈ 0	EQ20/R-3F35
3F4 des	1700 ± 25 %	≈ 762	≈ 0	EQ20/R-3F4
3F45 prot	1700 ± 25 %	≈ 762	≈ 0	EQ20/R-3F45

Core halves for use in combination with a plate (PLT)

A_L measured in combination with a plate (PLT), clamping force for A_L measurements, 30 ± 10 N.

GRADE	A_L (nH)	μ_e	AIR GAP (μm)	TYPE NUMBER
3C94	4750 ± 25 %	≈ 1590	≈ 0	EQ20/R-3C94
3C95 des	5660 ± 25 %	≈ 1890	≈ 0	EQ20/R-3C95
3C96 des	4350 ± 25 %	≈ 1450	≈ 0	EQ20/R-3C96
3F35 des	3300 ± 25 %	≈ 1100	≈ 0	EQ20/R-3F35
3F4 des	2200 ± 25 %	≈ 735	≈ 0	EQ20/R-3F4
3F45 prot	2200 ± 25 %	≈ 735	≈ 0	EQ20/R-3F45

Properties of core sets under power conditions

CORE COMBINATION	B (mT) at	CORE LOSS (W) at			
	H = 250 A/m; f = 10 kHz; T = 100 °C	f = 100 kHz; $\hat{B}$ = 100 mT; T = 100 °C	f = 100 kHz; $\hat{B}$ = 200 mT; T = 25 °C	f = 100 kHz; $\hat{B}$ = 200 mT; T = 100 °C	f = 500 kHz; $\hat{B}$ = 50 mT; T = 100 °C
EQ+EQ20/R-3C94	≥ 320	≤ 0.17	–	≤ 1.2	–
EQ+PLT20/S-3C94	≥ 320	≤ 0.13	–	≤ 0.9	–
EQ+EQ20/R-3C95	≥ 320	–	≤ 1.16	≤ 1.1	–
EQ+PLT20/S-3C95	≥ 320	–	≤ 0.89	≤ 0.84	–
EQ+EQ20/R-3C96	≥ 340	≤ 0.13	–	≤ 0.9	≤ 0.74
EQ+PLT20/S-3C96	≥ 340	≤ 0.091	–	≤ 0.68	≤ 0.56
EQ+EQ20/R-3F35	≥ 300	–	–	–	≤ 0.27
EQ+PLT20/S-3F35	≥ 300	–	–	–	≤ 0.2

Properties of core sets under power conditions (continued)

CORE COMBINATION	B (mT) at	CORE LOSS (W) at			
	H = 250 A/m; f = 10 kHz; T = 100 °C	f = 500 kHz; $\hat{B}$ = 100 mT; T = 100 °C	f = 1 MHz; $\hat{B}$ = 30 mT; T = 100 °C	f = 1 MHz; $\hat{B}$ = 50 mT; T = 100 °C	f = 3 MHz; $\hat{B}$ = 10 mT; T = 100 °C
EQ+EQ20/R-3F35	≥ 300	≤ 2.1	–	–	–
EQ+PLT20/S-3F35	≥ 300	≤ 1.6	–	–	–
EQ+EQ20/R-3F4	≥ 300	–	≤ 0.6	–	≤ 0.94
EQ+PLT20/S-3F4	≥ 300	–	≤ 0.45	–	≤ 0.72
EQ+EQ20/R-3F45	≥ 300	–	≤ 0.45	≤ 1.7	≤ 0.75
EQ+PLT20/S-3F45	≥ 300	–	≤ 0.35	≤ 1.3	≤ 0.6

MOUNTING PARTS

General data

ITEM	SPECIFICATION
Clamping force	≈ 30 N
Clamp material	corrosion resisting steel (CrNi)
Type number	CLM-EQ20/PLT20

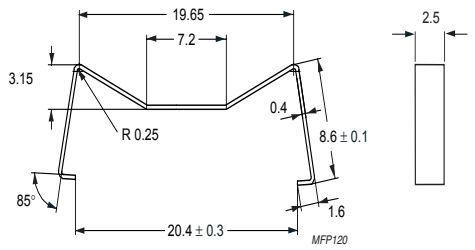

Dimensions in mm.

Fig.3 Mounting clamp for EQ20/R + PLT20/S.

CORES

Effective core parameters of a set of EQ cores

SYMBOL	PARAMETER	VALUE	UNIT
$\Sigma(l/A)$	core factor (C1)	0.414	mm^{-1}
V_e	effective volume	4145	mm^3
l_e	effective length	41.4	mm
A_e	effective area	100	mm^2
A_{min}	minimum area	95.0	mm^2
m	mass of core half	≈ 11	g

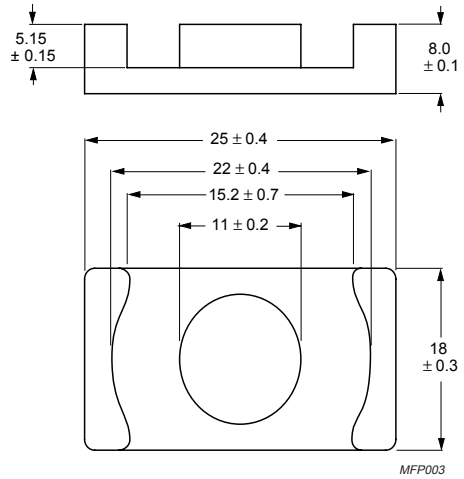

Dimensions in mm.

Fig.1 EQ25 core.

Core halves for general purpose transformers and power applications

Clamping force for A_L measurements, 40 ± 20 N.

GRADE	A_L (nH)	μ_e	AIR GAP (μm)	TYPE NUMBER
3C94	4800 ± 25 %	≈ 1580	≈ 0	EQ25-3C94
3C95 des	5710 ± 25 %	≈ 1880	≈ 0	EQ25-3C95
3C96 des	4400 ± 25 %	≈ 1450	≈ 0	EQ25-3C96
3F35 des	3350 ± 25 %	≈ 1100	≈ 0	EQ25-3F35
3F4 des	2300 ± 25 %	≈ 758	≈ 0	EQ25-3F4
3F45 prot	2300 ± 25 %	≈ 758	≈ 0	EQ25-3F45

Properties of core sets under power conditions

CORE COMBINATION	B (mT) at	CORE LOSS (W) at			
	H = 250 A/m; f = 10 kHz; T = 100 °C	f = 100 kHz; $\hat{B}$ = 100 mT; T = 100 °C	f = 100 kHz; $\hat{B}$ = 200 mT; T = 25 °C	f = 100 kHz; $\hat{B}$ = 200 mT; T = 100 °C	f = 500 kHz; $\hat{B}$ = 50 mT; T = 100 °C
EQ+EQ25-3C94	≥ 320	≤ 0.37	–	≤ 2.5	–
EQ+EQ25-3C95	≥ 320	–	≤ 2.45	≤ 2.32	–
EQ+EQ25-3C96	≥ 340	≤ 0.28	–	≤ 1.9	≤ 1.5
EQ+EQ25-3F35	≥ 300	–	–	–	≤ 0.56

Properties of core sets under power conditions (continued)

CORE COMBINATION	B (mT) at	CORE LOSS (W) at			
	H = 250 A/m; f = 10 kHz; T = 100 °C	f = 500 kHz; $\hat{B}$ = 100 mT; T = 100 °C	f = 1 MHz; $\hat{B}$ = 30 mT; T = 100 °C	f = 1 MHz; $\hat{B}$ = 50 mT; T = 100 °C	f = 3 MHz; $\hat{B}$ = 10 mT; T = 100 °C
EQ+EQ25-3F35	≥ 300	≤ 4.3	–	–	–
EQ+EQ25-3F4	≥ 300	–	≤ 1.25	–	≤ 2.0
EQ+EQ25-3F45	≥ 300	–	≤ 0.95	≤ 3.5	≤ 1.6

CORES

Effective core parameters of a EQ/LP/PLT combination

SYMBOL	PARAMETER	VALUE	UNIT
Σ(l/A)	core factor (C1)	0.294	mm^{-1}
V_e	effective volume	2370	mm^3
l_e	effective length	26.4	mm
A_e	effective area	89.7	mm^2
A_{min}	minimum area	82.8	mm^2
m	mass of core half	≈ 8.2	g
m	mass of plate	≈ 4.9	g

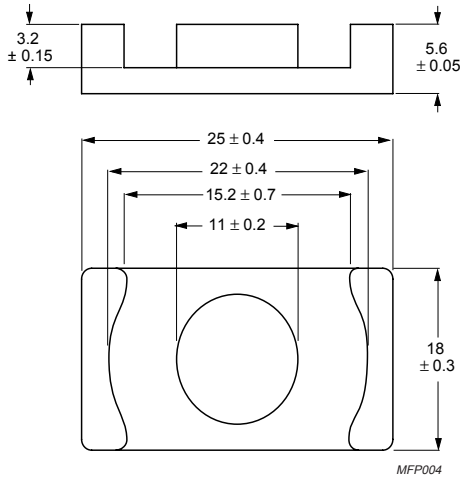

Dimensions in mm.

Fig.1 EQ25/LP core.

Ordering information for plates

GRADE	TYPE NUMBER
3C94	PLT25/18/2-3C94
3C95 des	PLT25/18/2-3C95
3C96 des	PLT25/18/2-3C96
3F35 des	PLT25/18/2-3F35
3F4 des	PLT25/18/2-3F4
3F45 prot	PLT25/18/2-3F45

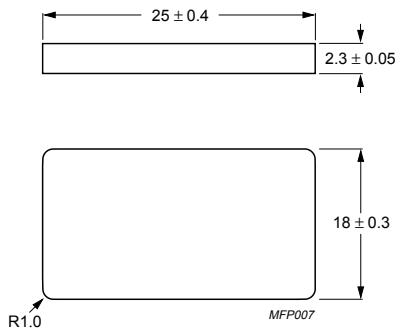

Dimensions in mm.

Fig.2 PLT25/18/2.

Core halves for use in combination with a plate (PLT)

A_L measured in combination with a plate (PLT), clamping force for A_L measurements, 40 ±20 N.

GRADE	A_L (nH)	μ_e	AIR GAP (μm)	TYPE NUMBER
3C94	6100 ± 25 %	≈ 1430	≈ 0	EQ25/LP-3C94
3C95 des	7130 ± 25 %	≈ 1670	≈ 0	EQ25/LP-3C95
3C96 des	5600 ± 25 %	≈ 1310	≈ 0	EQ25/LP-3C96
3F35 des	4350 ± 25 %	≈ 1020	≈ 0	EQ25/LP-3F35
3F4 des	3100 ± 25 %	≈ 725	≈ 0	EQ25/LP-3F4
3F45 prot	3100 ± 25 %	≈ 725	≈ 0	EQ25/LP-3F45

Properties of core sets under power conditions

CORE COMBINATION	B (mT) at	CORE LOSS (W) at			
	H = 250 A/m; f = 10 kHz; T = 100 °C	f = 100 kHz; $\hat{B}$ = 100 mT; T = 100 °C	f = 100 kHz; $\hat{B}$ = 200 mT; T = 25 °C	f = 100 kHz; $\hat{B}$ = 200 mT; T = 100 °C	f = 500 kHz; $\hat{B}$ = 50 mT; T = 100 °C
EQ/LP+PLT25-3C94	≥ 320	≤ 0.21	–	≤ 1.4	–
EQ/LP+PLT25-3C95	≥ 320	–	≤ 1.4	≤ 1.33	–
EQ/LP+PLT25-3C96	≥ 340	≤ 0.16	–	≤ 1.1	≤ 0.89
EQ/LP+PLT25-3F35	≥ 300	–	–	–	≤ 0.32

Properties of core sets under power conditions (continued)

CORE COMBINATION	B (mT) at	CORE LOSS (W) at			
	H = 250 A/m; f = 10 kHz; T = 100 °C	f = 500 kHz; $\hat{B}$ = 100 mT; T = 100 °C	f = 1 MHz; $\hat{B}$ = 30 mT; T = 100 °C	f = 1 MHz; $\hat{B}$ = 50 mT; T = 100 °C	f = 3 MHz; $\hat{B}$ = 10 mT; T = 100 °C
EQ/LP+PLT25-3F35	≥ 300	≤ 2.5	–	–	–
EQ/LP+PLT25-3F4	≥ 300	–	≤ 0.71	–	≤ 1.14
EQ/LP+PLT25-3F45	≥ 300	–	≤ 0.54	≤ 2.0	≤ 0.95

CORES

Effective core parameters of a set of EQ cores

SYMBOL	PARAMETER	VALUE	UNIT
Σ(l/A)	core factor (C1)	0.426	mm^{-1}
V_e	effective volume	4970	mm^3
l_e	effective length	46.0	mm
A_e	effective area	108	mm^2
A_{min}	minimum area	95.0	mm^2
m	mass of core half	≈ 13.2	g

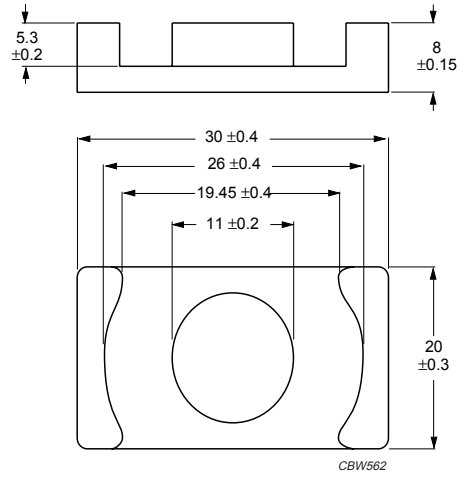

Dimensions in mm.

Fig.1 EQ30 core.

Effective core parameters of an EQ/PLT combination

SYMBOL	PARAMETER	VALUE	UNIT
Σ(l/A)	core factor (C1)	0.335	mm^{-1}
V_e	effective volume	3910	mm^3
l_e	effective length	36.2	mm
A_e	effective area	108	mm^2
A_{min}	minimum area	95.0	mm^2
m	mass of plate	≈ 7.6	g

Ordering information for plates

GRADE	TYPE NUMBER
3C94	PLT30/20/3-3C94
3C95 des	PLT30/20/3-3C95
3C96 des	PLT30/20/3-3C96
3F35 des	PLT30/20/3-3F35
3F4 des	PLT30/20/3-3F4
3F45 prot	PLT30/20/3-3F45

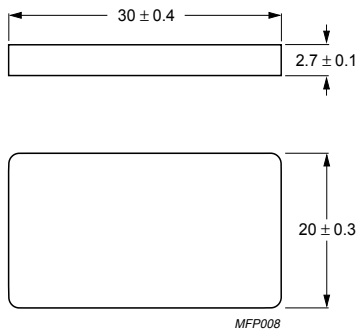

Dimensions in mm.

Fig.2 PLT30/20/3.

Core halves for use in combination with an EQ core

A_L measured in combination with a non-gapped core half, clamping force for A_L measurements, 40 ± 20 N.

GRADE	A_L (nH)	μ_e	AIR GAP (μm)	TYPE NUMBER
3C94	5400 ± 25 %	≈ 1830	≈ 0	EQ30-3C94
3C95 des	6630 ± 25 %	≈ 2250	≈ 0	EQ30-3C95
3C96 des	4900 ± 25 %	≈ 1660	≈ 0	EQ30-3C96
3F35 des	3600 ± 25 %	≈ 1220	≈ 0	EQ30-3F35
3F4 des	2400 ± 25 %	≈ 814	≈ 0	EQ30-3F4
3F45 prot	2400 ± 25 %	≈ 814	≈ 0	EQ30-3F45

Core halves for use in combination with a plate (PLT)

A_L measured in combination with a plate (PLT), clamping force for A_L measurements, 40 ± 20 N.

GRADE	A_L (nH)	μ_e	AIR GAP (μm)	TYPE NUMBER
3C94	6550 ± 25 %	≈ 1750	≈ 0	EQ30-3C94
3C95 des	7960 ± 25 %	≈ 2120	≈ 0	EQ30-3C95
3C96 des	6000 ± 25 %	≈ 1600	≈ 0	EQ30-3C96
3F35 des	4600 ± 25 %	≈ 1225	≈ 0	EQ30-3F35
3F4 des	3200 ± 25 %	≈ 853	≈ 0	EQ30-3F4
3F45 prot	3200 ± 25 %	≈ 853	≈ 0	EQ30-3F45

Properties of core sets under power conditions

CORE COMBINATION	B (mT) at	CORE LOSS (W) at			
	H = 250 A/m; f = 10 kHz; T = 100 °C	f = 100 kHz; $\hat{B}$ = 100 mT; T = 100 °C	f = 100 kHz; $\hat{B}$ = 200 mT; T = 25 °C	f = 100 kHz; $\hat{B}$ = 200 mT; T = 100 °C	f = 500 kHz; $\hat{B}$ = 50 mT; T = 100 °C
EQ+EQ30-3C94	≥ 320	≤ 0.45	–	≤ 3.0	–
EQ+PLT30-3C94	≥ 320	≤ 0.35	–	≤ 2.3	–
EQ+EQ30-3C95	≥ 320	–	≤ 2.93	≤ 2.78	–
EQ+PLT30-3C95	≥ 320	–	≤ 2.3	≤ 2.2	–
EQ+EQ30-3C96	≥ 340	≤ 0.34	–	≤ 2.3	≤ 1.9
EQ+PLT30-3C96	≥ 340	≤ 0.23	–	≤ 1.7	≤ 1.4
EQ+EQ30-3F35	≥ 300	–	–	–	≤ 0.67
EQ+PLT30-3F35	≥ 300	–	–	–	≤ 0.52

Properties of core sets under power conditions (continued)

CORE COMBINATION	B (mT) at	CORE LOSS (W) at			
	H = 250 A/m; f = 10 kHz; T = 100 °C	f = 500 kHz; $\hat{B}$ = 100 mT; T = 100 °C	f = 1 MHz; $\hat{B}$ = 30 mT; T = 100 °C	f = 1 MHz; $\hat{B}$ = 50 mT; T = 100 °C	f = 3 MHz; $\hat{B}$ = 10 mT; T = 100 °C
EQ+EQ30-3F35	≥ 300	≤ 5.2	–	–	–
EQ+PLT30-3F35	≥ 300	≤ 4.1	–	–	–
EQ+EQ30-3F4	≥ 300	–	≤ 1.5	–	≤ 2.4
EQ+PLT30-3F4	≥ 300	–	≤ 1.17	–	≤ 1.9
EQ+EQ30-3F45	≥ 300	–	≤ 1.15	≤ 4.3	≤ 2.0
EQ+PLT30-3F45	≥ 300	–	≤ 0.9	≤ 3.4	≤ 1.55

COIL FORMERS

General data

PARAMETER	SPECIFICATION
Coil former material	phenolformaldehyde (PF), glass reinforced, flame retardant in accordance with *"UL 94V-0"*; UL file number E41429 (M)
Pin material	copper-clad steel, tin (Sn) plated
Maximum operating temperature	180 °C, *"IEC 60085"*, class H
Resistance to soldering heat	*"IEC 60068-2-20"*, Part 2, Test Tb, method 1B: 350 °C, 3.5 s
Solderability	*"IEC 60068-2-20"*, Part 2, Test Ta, method 1: 235 °C, 2 s

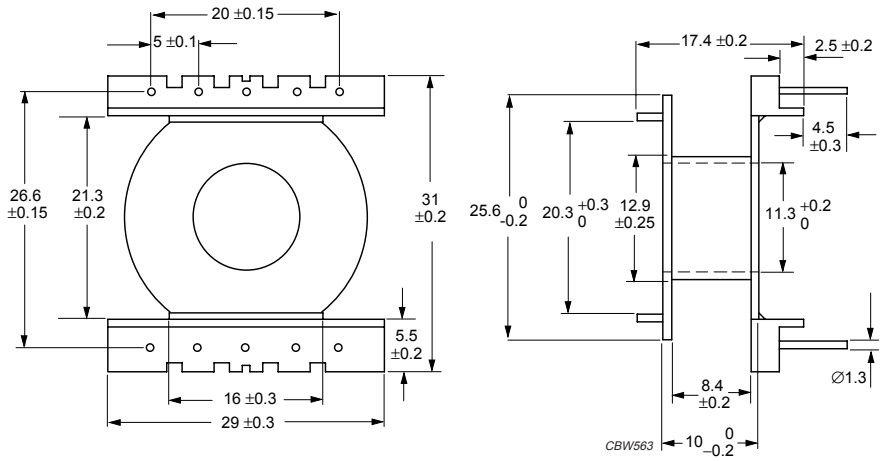

Dimensions in mm.

Fig. 3 EQ30 coil former; 10-pins.

Winding data and area product for EQ30 coil former with 10 pins

NUMBER OF SECTIONS	WINDING AREA (mm^2)	MINIMUM WINDING WIDTH (mm)	AVERAGE LENGTH OF TURN (mm)	AREA PRODUCT Ae x Aw (mm^4)	TYPE NUMBER
1	52.0	8.2	60	5620	CSV-EQ30-1S-10P

CORES

Effective core parameters of a set of EQ cores

SYMBOL	PARAMETER	VALUE	UNIT
Σ(l/A)	core factor (C1)	0.341	mm^{-1}
V_e	effective volume	7900	mm^3
l_e	effective length	51.9	mm
A_e	effective area	152	mm^2
A_{min}	minimum area	119	mm^2
m	mass of core half	≈ 21.5	g

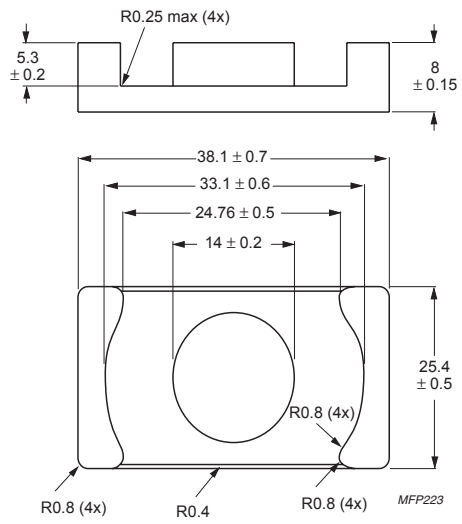

Dimensions in mm.

Fig.1 EQ38/8/25 core.

Effective core parameters of an EQ/PLT combination

SYMBOL	PARAMETER	VALUE	UNIT
Σ(l/A)	core factor (C1)	0.282	mm^{-1}
V_e	effective volume	6190	mm^3
l_e	effective length	41.7	mm
A_e	effective area	148	mm^2
A_{min}	minimum area	119	mm^2
m	mass of plate	≈ 14.6	g

Ordering information for plates

GRADE	TYPE NUMBER
3C94	PLT38/25/2.7-3C94
3C95 des	PLT38/25/2.7-3C95
3C96 des	PLT38/25/2.7-3C96
3F35 des	PLT38/25/2.7-3F35
3F4 des	PLT38/25/2.7-3F4
3F45 prot	PLT38/25/2.7-3F45

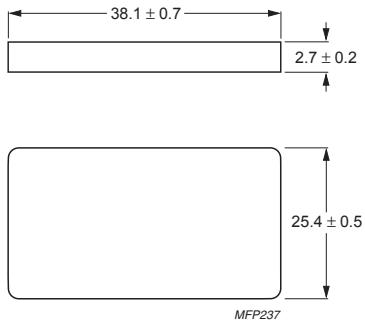

Dimensions in mm.

Fig.2 PLT38/25/2.7.

Core halves for use in combination with an EQ core

A_L measured in combination with a non-gapped core half, clamping force for A_L measurements, 50 ± 20 N.

GRADE	A_L (nH)	μ_e	AIR GAP (μm)	TYPE NUMBER
3C94	7000 ± 25 %	≈ 1900	≈ 0	EQ38/8/25-3C94
3C95 des	8810 ± 25 %	≈ 2395	≈ 0	EQ38/8/25-3C95
3C96 des	6300 ± 25 %	≈ 1710	≈ 0	EQ38/8/25-3C96
3F35 des	4500 ± 25 %	≈ 1220	≈ 0	EQ38/8/25-3F35
3F4 des	3000 ± 25 %	≈ 815	≈ 0	EQ38/8/25-3F4
3F45 prot	3000 ± 25 %	≈ 815	≈ 0	EQ38/8/25-3F45

Core halves for use in combination with a plate (PLT)

A_L measured in combination with a plate (PLT), clamping force for A_L measurements, 50 ± 20 N.

GRADE	A_L (nH)	μ_e	AIR GAP (μm)	TYPE NUMBER
3C94	8200 ± 25 %	≈ 1840	≈ 0	PLT38/25/2.7-3C94
3C95 des	10220 ± 25 %	≈ 2295	≈ 0	PLT38/25/2.7-3C95
3C96 des	7400 ± 25 %	≈ 1660	≈ 0	PLT38/25/2.7-3C96
3F35 des	5300 ± 25 %	≈ 1190	≈ 0	PLT38/25/2.7-3F35
3F4 des	3500 ± 25 %	≈ 785	≈ 0	PLT38/25/2.7-3F4
3F45 prot	3500 ± 25 %	≈ 785	≈ 0	PLT38/25/2.7-3F45

Properties of core sets under power conditions

CORE COMBINATION	B (mT) at	CORE LOSS (W) at			
	H = 250 A/m; f = 10 kHz; T = 100 °C	f = 100 kHz; $\hat{B}$ = 100 mT; T = 100 °C	f = 100 kHz; $\hat{B}$ = 200 mT; T = 25 °C	f = 100 kHz; $\hat{B}$ = 200 mT; T = 100 °C	f = 500 kHz; $\hat{B}$ = 50 mT; T = 100 °C
EQ+EQ38-3C94	≥ 320	≤ 0.72	≤ 4.8	–	–
EQ+PLT38-3C94	≥ 320	≤ 0.56	≤ 3.8	–	–
EQ+EQ38-3C95	≥ 320	–	≤ 4.66	≤ 4.42	–
EQ+PLT38-3C95	≥ 320	–	≤ 3.65	≤ 3.47	–
EQ+EQ38-3C96	≥ 340	≤ 0.52	–	≤ 3.5	≤ 3.1
EQ+PLT38-3C96	≥ 340	≤ 0.42	–	≤ 2.8	≤ 2.4
EQ+EQ38-3F35	≥ 300	–	–	–	≤ 1.2
EQ+PLT38-3F35	≥ 300	–	–	–	≤ 0.94

Properties of core sets under power conditions (continued)

CORE COMBINATION	B (mT) at	CORE LOSS (W) at			
	H = 250 A/m; f = 10 kHz; T = 100 °C	f = 500 kHz; $\hat{B}$ = 100 mT; T = 100 °C	f = 1 MHz; $\hat{B}$ = 30 mT; T = 100 °C	f = 1 MHz; $\hat{B}$ = 50 mT; T = 100 °C	f = 3 MHz; $\hat{B}$ = 10 mT; T = 100 °C
EQ+EQ38-3F35	≥ 300	≤ 8.9	–	–	–
EQ+PLT38-3F35	≥ 300	≤ 7.0	–	–	–
EQ+EQ38-3F4	≥ 300	–	≤ 4.1	–	≤ 5.8
EQ+PLT38-3F4	≥ 300	–	≤ 3.2	–	≤ 4.6
EQ+EQ38-3F45	≥ 300	–	≤ 3.2	≤ 12	≤ 4.7
EQ+PLT38-3F45	≥ 300	–	≤ 2.5	≤ 9.0	≤ 3.7

Soft Ferrites

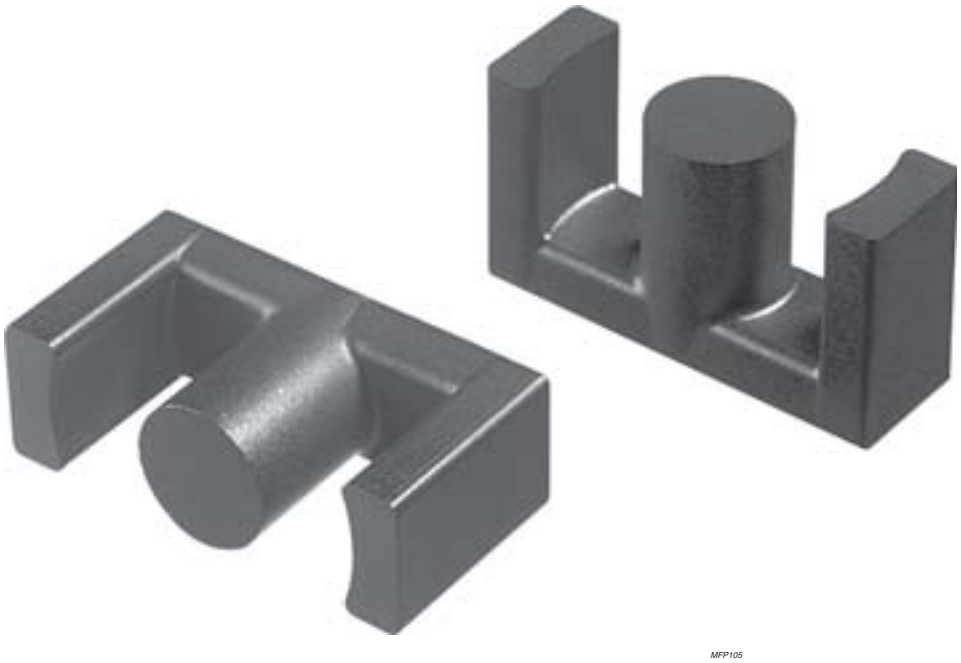
MFP105

PRODUCT OVERVIEW AND TYPE NUMBER STRUCTURE

Product overview ER cores

CORE TYPE	V_e (mm^3)	A_e (mm^2)	MASS (g)
ER28/14/11	5260	81.4	14
ER28/17/11	6140	81.4	16
ER35/21/11	9710	107	23
ER35W/21/11	9548	103	27
ER40/22/13	14600	149	37
ER42/22/16	19200	194	50
ER42/22/15	16800	170	42
ER48/21/21	25500	255	64
ER48/18/18	20300	231	51
ER54/18/18	23000	250	61

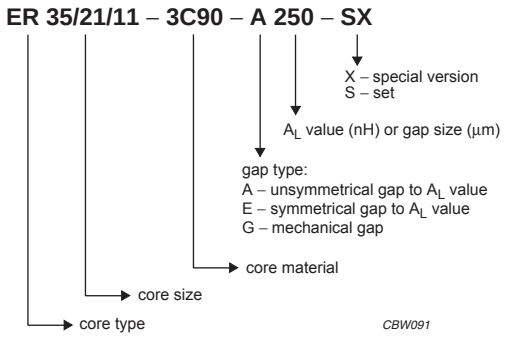

Fig.1 Type number structure for cores.

CORE SETS

Effective core parameters

SYMBOL	PARAMETER	VALUE	UNIT
$\Sigma(l/A)$	core factor (C1)	0.786	mm^{-1}
V_e	effective volume	5260	mm^3
l_e	effective length	64.0	mm
A_e	effective area	81.4	mm^2
A_{min}	minimum area	77.0	mm^2
m	mass of core half	≈ 14	g

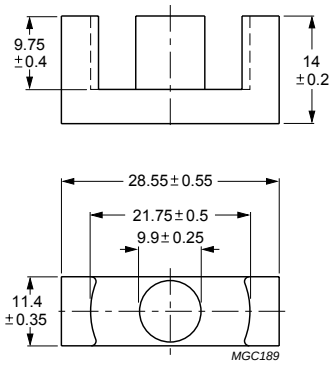

Dimensions in mm.

Fig.1 ER28/14/11 core half.

Core halves

Clamping force for A_L measurements, 40 ±20 N. Gapped cores are available on request.

GRADE	A_L (nH)	μ_e	AIR GAP (μm)	TYPE NUMBER
3C90	2900 ±25%	≈1800	≈ 0	ER28/14/11-3C90
3C94	2900 ±25%	≈1800	≈ 0	ER28/14/11-3C94

Properties of core sets under power conditions

GRADE	B (mT) at	CORE LOSS (W) at		
	H = 250 A/m; f = 25 kHz; T = 100 °C	f = 25 kHz; $\hat{B}$ = 200 mT; T = 100 °C	f = 100 kHz; $\hat{B}$ = 100 mT; T = 100 °C	f = 100 kHz; $\hat{B}$ = 200 mT; T = 100 °C
3C90	≥320	≤ 0.63	≤ 0.67	–
3C94	≥320	–	≤ 0.5	≤ 3.2

CORE SETS

Effective core parameters

SYMBOL	PARAMETER	VALUE	UNIT
$\Sigma(l/A)$	core factor (C1)	0.928	mm^{-1}
V_e	effective volume	6140	mm^3
l_e	effective length	75.5	mm
A_e	effective area	81.4	mm^2
A_{min}	minimum area	77.0	mm^2
m	mass of core half	≈ 16	g

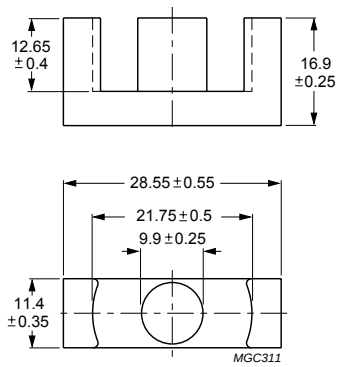

Dimensions in mm.

Fig.1 ER28/17/11 core half.

Core halves

Clamping force for A_L measurements, 40 ±20 N. Gapped cores are available on request.

GRADE	A_L (nH)	μ_e	AIR GAP (μm)	TYPE NUMBER
3C90	2500 ±25%	≈ 1900	≈ 0	ER28/17/11-3C90
3C94	2500 ±25%	≈ 1900	≈ 0	ER28/17/11-3C94

Properties of core sets under power conditions

GRADE	B (mT) at	CORE LOSS (W) at		
	H = 250 A/m; f = 25 kHz; T = 100 °C	f = 25 kHz; $\hat{B}$ = 200 mT; T = 100 °C	f = 100 kHz; $\hat{B}$ = 100 mT; T = 100 °C	f = 100 kHz; $\hat{B}$ = 200 mT; T = 100 °C
3C90	≥320	≤ 0.74	≤ 0.77	–
3C94	≥320	–	≤ 0.58	≤ 3.7

CORE SETS

Effective core parameters

SYMBOL	PARAMETER	VALUE	UNIT
$\Sigma(l/A)$	core factor (C1)	0.849	mm^{-1}
V_e	effective volume	9710	mm^3
l_e	effective length	90.8	mm
A_e	effective area	107	mm^2
A_{min}	minimum area	100	mm^2
m	mass of core half	≈ 23	g

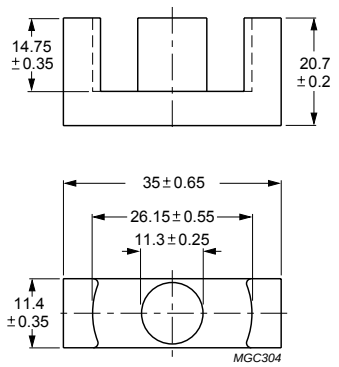

Dimensions in mm.

Fig.1 ER35/21/11 core half.

Core halves

Clamping force for A_L measurements, 40 ±20 N. Gapped cores are available on request.

GRADE	A_L (nH)	μ_e	AIR GAP (μm)	TYPE NUMBER
3C90	2800 ±25%	≈ 1900	≈ 0	ER35/21/11-3C90
3C94	2800 ±25%	≈ 1900	≈ 0	ER35/21/11-3C94

Properties of core sets under power conditions

GRADE	B (mT) at	CORE LOSS (W) at		
	H = 250 A/m; f = 25 kHz; T = 100 °C	f = 25 kHz; $\hat{B}$ = 200 mT; T = 100 °C	f = 100 kHz; $\hat{B}$ = 100 mT; T = 100 °C	f = 100 kHz; $\hat{B}$ = 200 mT; T = 100 °C
3C90	≥320	≤ 1.2	≤ 1.3	–
3C94	≥320	–	≤ 0.95	≤ 5.8

CORE SETS

Effective core parameters

SYMBOL	PARAMETER	VALUE	UNIT
Σ(l/A)	core factor (C1)	0.900	mm^{-1}
V_e	effective volume	9548	mm^3
l_e	effective length	92.7	mm
A_e	effective area	103	mm^2
A_{min}	minimum area	100	mm^2
m	mass of core half	≈ 27	g

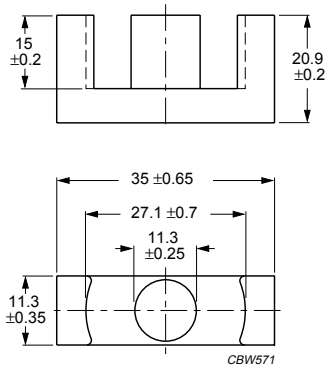

Dimensions in mm.

Fig.1 ER35W/21/11 core half.

Core halves

Clamping force for A_L measurements, 40 ±20 N. Gapped cores are available on request.

GRADE	A_L (nH)	μ_e	AIR GAP (μm)	TYPE NUMBER
3C90	3000 ±25%	≈ 2150	≈ 0	ER35W/21/11-3C90
3C94	3000 ±25%	≈ 2150	≈ 0	ER35W/21/11-3C94

Properties of core sets under power conditions

GRADE	B (mT) at	CORE LOSS (W) at		
	H = 250 A/m; f = 25 kHz; T = 100 °C	f = 25 kHz; $\hat{B}$ = 200 mT; T = 100 °C	f = 100 kHz; $\hat{B}$ = 100 mT; T = 100 °C	f = 100 kHz; $\hat{B}$ = 200 mT; T = 100 °C
3C90	≥320	≤ 1.2	≤ 1.3	–
3C94	≥320	–	≤ 1.0	≤ 5.7

CORE SETS

Effective core parameters

SYMBOL	PARAMETER	VALUE	UNIT
Σ(l/A)	core factor (C1)	0.658	mm^{-1}
V_e	effective volume	14600	mm^3
l_e	effective length	98.0	mm
A_e	effective area	149	mm^2
A_{min}	minimum area	139	mm^2
m	mass of core half	≈ 37	g

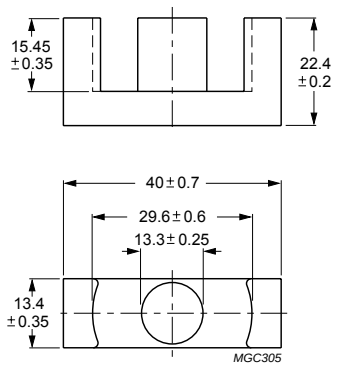

Dimensions in mm.

Fig.1 ER40/22/13 core half.

Core halves

Clamping force for A_L measurements, 50 ±20 N. Gapped cores are available on request.

GRADE	A_L (nH)	μ_e	AIR GAP (μm)	TYPE NUMBER
3C90	3600 ±25%	≈ 1900	≈ 0	ER40/22/13-3C90
3C94	3600 ±25%	≈ 1900	≈ 0	ER40/22/13-3C94

Properties of core sets under power conditions

GRADE	B (mT) at	CORE LOSS (W) at		
	H = 250 A/m; f = 25 kHz; T = 100 °C	f = 25 kHz; $\hat{B}$ = 200 mT; T = 100 °C	f = 100 kHz; $\hat{B}$ = 100 mT; T = 100 °C	f = 100 kHz; $\hat{B}$ = 200 mT; T = 100 °C
3C90	≥320	≤ 1.8	≤ 1.9	–
3C94	≥320	–	≤ 1.45	≤ 8.7

CORE SETS

Effective core parameters

SYMBOL	PARAMETER	VALUE	UNIT
$\Sigma(l/A)$	core factor (C1)	0.509	mm^{-1}
V_e	effective volume	19200	mm^3
l_e	effective length	98.8	mm
A_e	effective area	194	mm^2
A_{min}	minimum area	189	mm^2
m	mass of core half	≈ 50	g

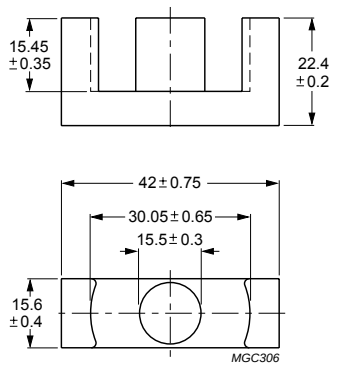

Dimensions in mm.

Fig.1 ER42/22/16 core half.

Core halves

Clamping force for A_L measurements, 50 ±20 N. Gapped cores are available on request.

GRADE	A_L (nH)	μ_e	AIR GAP (μm)	TYPE NUMBER
3C90	4600 ±25%	≈ 1900	≈ 0	ER42/22/16-3C90
3C94	4600 ±25%	≈ 1900	≈ 0	ER42/22/16-3C94

Properties of core sets under power conditions

GRADE	B (mT) at	CORE LOSS (W) at		
	H = 250 A/m; f = 25 kHz; T = 100 °C	f = 25 kHz; $\hat{B}$ = 200 mT; T = 100 °C	f = 100 kHz; $\hat{B}$ = 100 mT; T = 100 °C	f = 100 kHz; $\hat{B}$ = 200 mT; T = 100 °C
3C90	≥320	≤ 2.3	≤ 2.4	–
3C94	≥320	–	≤ 1.8	≤ 11

CORE SETS

Effective core parameters

SYMBOL	PARAMETER	VALUE	UNIT
Σ(l/A)	core factor (C1)	0.582	mm^{-1}
V_e	effective volume	16800	mm^3
l_e	effective length	99.0	mm
A_e	effective area	170	mm^2
A_{min}	minimum area	170	mm^2
m	mass of core half	≈ 42	g

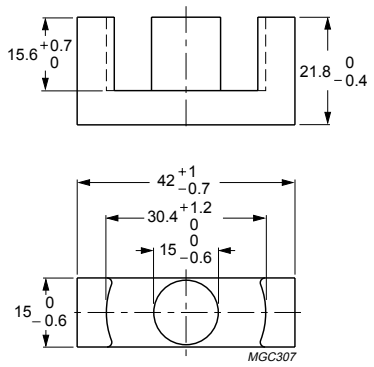

Dimensions in mm.

Fig.1 ER42/22/15 core half.

Core halves

Clamping force for A_L measurements, 40 ±20 N. Gapped cores are available on request.

GRADE	A_L (nH)	μ_e	AIR GAP (μm)	TYPE NUMBER
3C90	4000 ±25%	≈ 1900	≈ 0	ER42/22/15-3C90
3C94	4000 ±25%	≈ 1900	≈ 0	ER42/22/15-3C94

Properties of core sets under power conditions

GRADE	B (mT) at	CORE LOSS (W) at		
	H = 250 A/m; f = 25 kHz; T = 100 °C	f = 25 kHz; $\hat{B}$ = 200 mT; T = 100 °C	f = 100 kHz; $\hat{B}$ = 100 mT; T = 100 °C	f = 100 kHz; $\hat{B}$ = 200 mT; T = 100 °C
3C90	≥320	≤ 2.0	≤ 2.1	–
3C94	≥320	–	≤ 1.6	≤ 9.0

CORE SETS

Effective core parameters

SYMBOL	PARAMETER	VALUE	UNIT
Σ(l/A)	core factor (C1)	0.392	mm^{-1}
V_e	effective volume	25500	mm^3
l_e	effective length	100	mm
A_e	effective area	255	mm^2
A_{min}	minimum area	248	mm^2
m	mass of core half	≈ 64	g

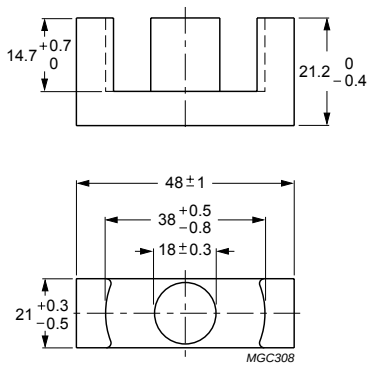

Dimensions in mm.

Fig.1 ER48/21/21 core half.

Core halves

Clamping force for A_L measurements, 50 ±20 N. Gapped cores are available on request.

GRADE	A_L (nH)	μ_e	AIR GAP (μm)	TYPE NUMBER
3C90	5700 ±25%	≈ 1900	≈ 0	ER48/21/21-3C90
3C94	5700 ±25%	≈ 1900	≈ 0	ER48/21/21-3C94

Properties of core sets under power conditions

GRADE	B (mT) at	CORE LOSS (W) at		
	H = 250 A/m; f = 25 kHz; T = 100 °C	f = 25 kHz; $\hat{B}$ = 200 mT; T = 100 °C	f = 100 kHz; $\hat{B}$ = 100 mT; T = 100 °C	f = 100 kHz; $\hat{B}$ = 200 mT; T = 100 °C
3C90	≥320	≤ 3.1	≤ 3.3	–
3C94	≥320	–	≤ 2.6	≤ 15

CORE SETS

Effective core parameters

SYMBOL	PARAMETER	VALUE	UNIT
$\Sigma(l/A)$	core factor (C1)	0.377	mm^{-1}
V_e	effective volume	20300	mm^3
l_e	effective length	87.0	mm
A_e	effective area	231	mm^2
A_{min}	minimum area	221	mm^2
m	mass of core half	≈ 51	g

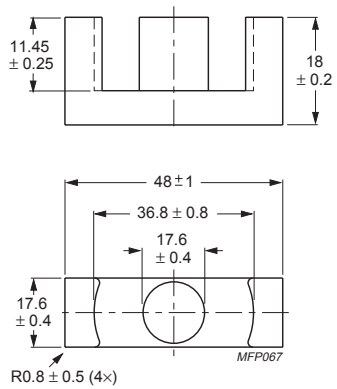

Dimensions in mm.

Fig.1 ER48/18/18 core half.

Core halves

Clamping force for A_L measurements, 50 ± 20 N.

GRADE	A_L (nH)	μ_e	TOTAL AIR GAP (μm)	TYPE NUMBER
3C90	180 ± 5%	≈ 54	≈ 2500	ER48/18/18-3C90-E180
	265 ± 5%	≈ 77	≈ 1500	ER48/18/18-3C90-E265
	309 ± 5%	≈ 93	≈ 1250	ER48/18/18-3C90-E309
	370 ± 5%	≈ 111	≈ 1000	ER48/18/18-3C90-E370
	465 ± 5%	≈ 140	≈ 750	ER48/18/18-3C90-E465
	6400 ± 25%	≈ 1920	≈ 0	ER48/18/18-3C90
3C94	6400 ± 25%	≈ 1920	≈ 0	ER48/18/18-3C94

Properties of core sets under power conditions

GRADE	B (mT) at	CORE LOSS (W) at		
	H = 250 A/m; f = 25 kHz; T = 100 °C	f = 25 kHz; $\hat{B}$ = 200 mT; T = 100 °C	f = 100 kHz; $\hat{B}$ = 100 mT; T = 100 °C	f = 100 kHz; $\hat{B}$ = 200 mT; T = 100 °C
3C90	≥330	≤ 2.4	≤ 2.5	–
3C94	≥330	–	≤ 2.1	≤ 12

CORE SETS

Effective core parameters

SYMBOL	PARAMETER	VALUE	UNIT
$\Sigma(l/A)$	core factor (C1)	0.370	mm^{-1}
V_e	effective volume	23000	mm^3
l_e	effective length	91.8	mm
A_e	effective area	250	mm^2
A_{min}	minimum area	240	mm^2
m	mass of core half	≈ 61	g

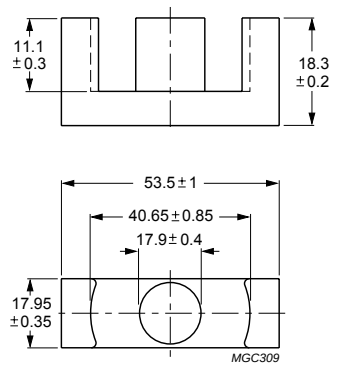

Dimensions in mm.

Fig.1 ER54/18/18 core half.

Core halves

Clamping force for A_L measurements, 50 ±20 N. Gapped cores are available on request.

GRADE	A_L (nH)	μ_e	AIR GAP (μm)	TYPE NUMBER
3C90	6100 ±25%	≈ 1800	≈ 0	ER54/18/18-3C90
3C94	6100 ±25%	≈ 1800	≈ 0	ER54/18/18-3C94

Properties of core sets under power conditions

GRADE	B (mT) at	CORE LOSS (W) at		
	H = 250 A/m; f = 25 kHz; T = 100 °C	f = 25 kHz; $\hat{B}$ = 200 mT; T = 100 °C	f = 100 kHz; $\hat{B}$ = 100 mT; T = 100 °C	f = 100 kHz; $\hat{B}$ = 200 mT; T = 100 °C
3C90	≥320	≤ 2.8	≤ 2.9	–
3C94	≥320	–	≤ 2.3	≤ 12.5

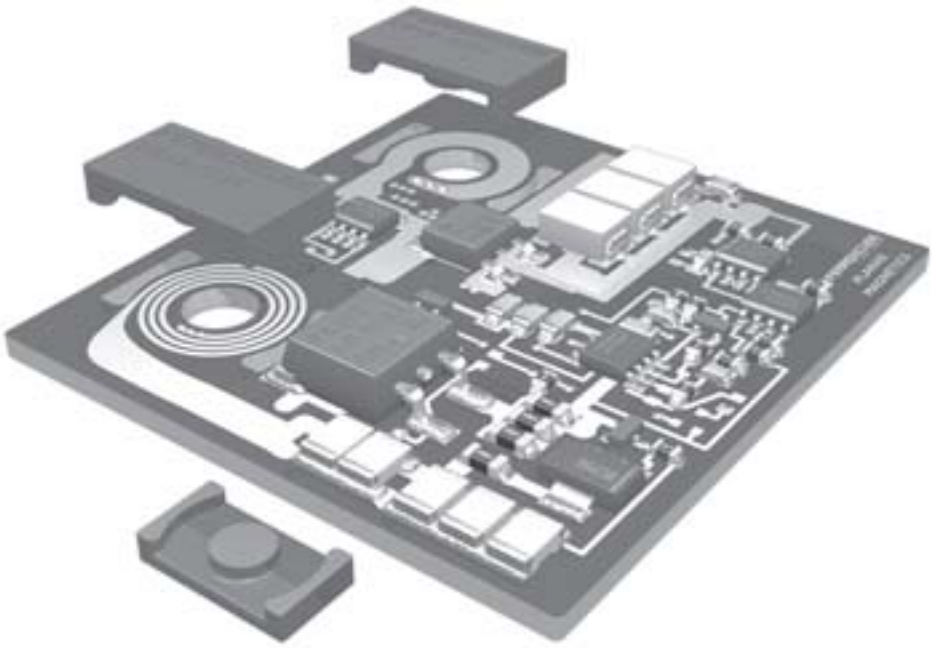

MFP085

PRODUCT OVERVIEW AND TYPE NUMBER STRUCTURE

Product overview Planar ER cores

CORE TYPE	V_e (mm^3)	A_e (mm^2)	MASS (g)
ER9.5/2.5/5	120	8.47	0.35
ER11/2.5/6	174	11.9	0.5
ER14.5/3/7	333	17.6	0.9
ER18/3.2/10	667	30.2	1.6
ER23/3.6/13	1340	50.2	3.2
ER32/6/25	5400	141	16
ER41/7.6/32	12900	225	37
ER51/10/38	25800	351	74.7
ER64/13/51	52600	566	152

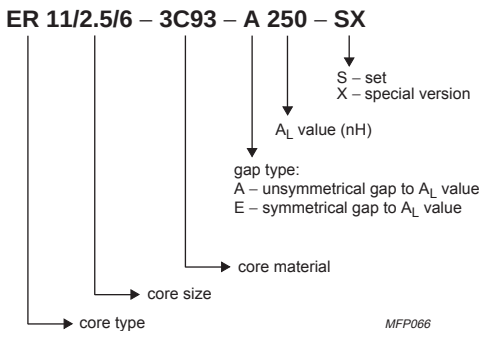

Fig.1 Type number structure for cores.

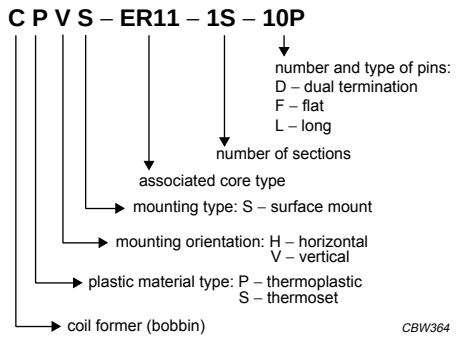

Fig.2 Type number structure for coil formers.

CORE SETS

Effective core parameters

SYMBOL	PARAMETER	VALUE	UNIT
Σ(l/A)	core factor (C1)	1.67	mm^{-1}
V_e	effective volume	120	mm^3
l_e	effective length	14.2	mm
A_e	effective area	8.47	mm^2
A_{min}	minimum area	7.60	mm^2
m	mass of core half	≈ 0.35	g

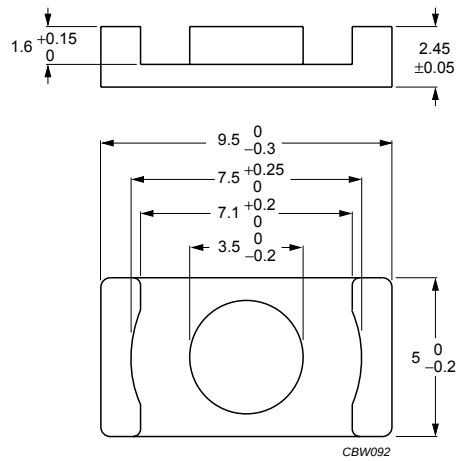

Dimensions in mm.

Fig.1 ER9.5/2.5/5 core half.

Core sets for general purpose transformers and power applications

Clamping force for A_L measurements, 10 ±5 N.

GRADE	A_L (nH)	μ_e	AIR GAP (μm)	TYPE NUMBER
3C92 des	750 ±25%	≈ 1000	≈ 0	ER9.5/2.5/5-3C92-S
3C93 des	850 ±25%	≈ 1130	≈ 0	ER9.5/2.5/5-3C93-S
3C94	63 ±3%	≈ 84	≈ 200	ER9.5/2.5/5-3C94-A63-S
	100 ±5%	≈ 133	≈ 120	ER9.5/2.5/5-3C94-A100-S
	160 ±8%	≈ 213	≈ 70	ER9.5/2.5/5-3C94-A160-S
	1000 ±25%	≈ 1330	≈ 0	ER9.5/2.5/5-3C94-S
3C95 des	1150 ±25%	≈ 1540	≈ 0	ER9.5/2.5/5-3C95-S
3C96 des	900 ±25%	≈ 1200	≈ 0	ER9.5/2.5/5-3C96-S
3F3	63 ±3%	≈ 84	≈ 200	ER9.5/2.5/5-3F3-A63-S
	100 ±5%	≈ 133	≈ 120	ER9.5/2.5/5-3F3-A100-S
	160 ±8%	≈ 213	≈ 70	ER9.5/2.5/5-3F3-A160-S
	850 ±25%	≈ 1130	≈ 0	ER9.5/2.5/5-3F3-S
3F35 des	700 ±25%	≈ 930	≈ 0	ER9.5/2.5/5-3F35-S
3F4 des	40 ±3%	≈ 53	≈ 340	ER9.5/2.5/5-3F4-A40-S
	63 ±5%	≈ 84	≈ 190	ER9.5/2.5/5-3F4-A63-S
	100 ±5%	≈ 133	≈ 100	ER9.5/2.5/5-3F4-A100-S
	525 ±25%	≈ 700	≈ 0	ER9.5/2.5/5-3F4-S
3F45 prot	525 ±25%	≈ 700	≈ 0	ER9.5/2.5/5-3F45-S

Core sets of high permeability grades

Clamping force for A_L measurements, 10 ±5 N.

GRADE	A_L (nH)	μ_e	AIR GAP (μm)	TYPE NUMBER
3E5	3600 +40/–30%	≈ 4800	≈ 0	ER9.5/2.5/5-3E5-S
3E6	4800 +40/–30%	≈ 6400	≈ 0	ER9.5/2.5/5-3E6-S

Properties of core sets under power conditions

GRADE	B (mT) at	CORE LOSS (W) at				
	H = 250 A/m; f = 25 kHz; T = 100 °C	f = 100 kHz; $\hat{B}$ = 100 mT; T = 100 °C	f = 100 kHz; $\hat{B}$ = 200 mT; T = 25 °C	f = 100 kHz; $\hat{B}$ = 200 mT; T = 100 °C	f = 400 kHz; $\hat{B}$ = 50 mT; T = 100 °C	f = 500 kHz; $\hat{B}$ = 50 mT; T = 100 °C
3C92	≥370	≤ 0.011	–	≤ 0.072	–	–
3C93	≥320	≤ 0.011[1]	–	≤ 0.072[1]	–	–
3C94	≥320	≤ 0.011	–	≤ 0.072	–	–
3C95	≥320	–	≤ 0.07	≤ 0.07	–	–
3C96	≥340	≤ 0.0085	–	≤ 0.058	≤ 0.018	≤ 0.045
3F3	≥300	≤ 0.015	–	–	≤ 0.025	–
3F35	≥300	–	–	–	≤ 0.011	≤ 0.016
3F4	≥250	–	–	–	–	–

1. Measured at 140 °C.

Properties of core sets under power conditions (continued)

GRADE	B (mT) at	CORE LOSS (W) at			
	H = 250 A/m; f = 25 kHz; T = 100 °C	f = 500 kHz; $\hat{B}$ = 100 mT; T = 100 °C	f = 1 MHz; $\hat{B}$ = 30 mT; T = 100 °C	f = 1 MHz; $\hat{B}$ = 50 mT; T = 100 °C	f = 3 MHz; $\hat{B}$ = 10 mT; T = 100 °C
3F35	≥300	≤ 0.13	–	–	–
3F4	≥250	–	≤ 0.036	–	≤ 0.056
3F45	≥250	–	≤ 0.027	≤ 0.1	≤ 0.048

COIL FORMERS

General data

PARAMETER	SPECIFICATION
Coil former material	liquid crystal polymer (LCP), glass reinforced, flame retardant in accordance with *"UL 94V-0"*; UL file number E54705(M)
Pin material	copper-tin alloy (CuSn), tin (Sn) plated
Maximum operating temperature	155 °C, *"IEC 60085"*, class F
Resistance to soldering heat	*"IEC 60068-2-20"*, Part 2, Test Tb, method 1B: 350 °C, 3.5 s
Solderability	*"IEC 60068-2-20"*, Part 2, Test Ta, method 1: 235 °C, 2 s

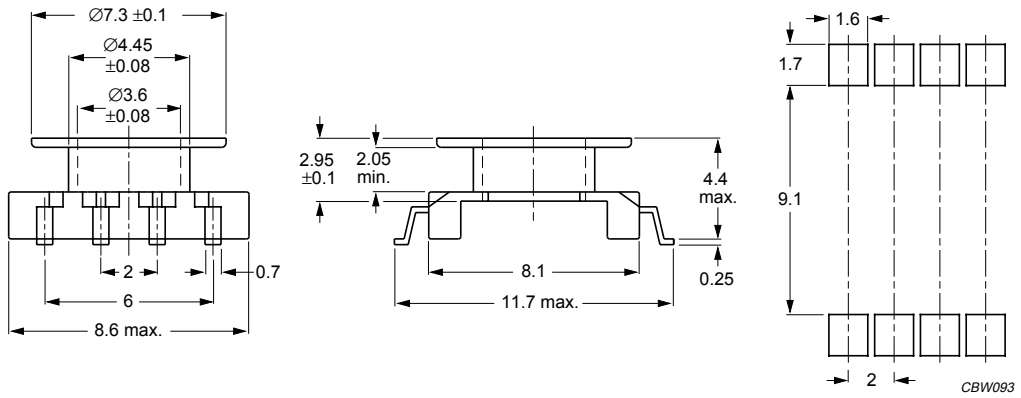

Dimensions in mm.

Fig.2 ER9.5/2.5/5 coil former (SMD); 8-solder pads.

Winding data and area product for ER9.5/2.5/5 coil former (SMD) with 8 solder pads

NUMBER OF SECTIONS	WINDING AREA (mm^2)	MINIMUM WINDING WIDTH (mm)	AVERAGE LENGTH OF TURN (mm)	AREA PRODUCT Ae x Aw (mm^4)	TYPE NUMBER
1	2.8	2.05	18.4	23.7	CPVS-ER9.5-1S-8P-Z

MOUNTING PARTS

General data and ordering information

ITEM	REMARKS	FIGURE	TYPE NUMBER
Clamp	stainless steel (CrNi); clamping force ≈ 20 N	3	CLM-ER9.5

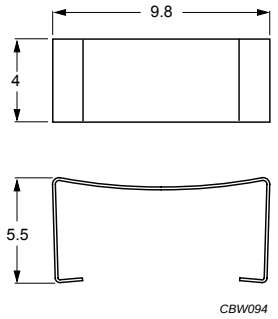

Dimensions in mm.

Fig.3 ER9.5/2.5/5 clamp.

CORE SETS

Effective core parameters

SYMBOL	PARAMETER	VALUE	UNIT
$\Sigma(l/A)$	core factor (C1)	1.23	mm^{-1}
V_e	effective volume	174	mm^3
l_e	effective length	14.7	mm
A_e	effective area	11.9	mm^2
A_{min}	minimum area	10.3	mm^2
m	mass of core half	≈ 0.5	g

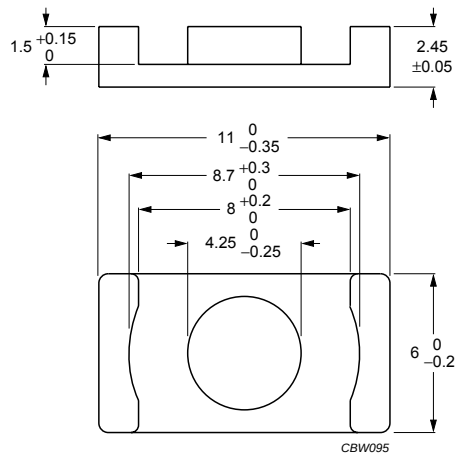

Dimensions in mm.

Fig.1 ER11/2.5/6 core half.

Core sets for general purpose transformers and power applications

Clamping force for A_L measurements, 15 ±5 N.

GRADE	A_L (nH)	μ_e	AIR GAP (μm)	TYPE NUMBER
3C92 des	1050 ±25%	≈ 1030	≈ 0	ER11/2.5/6-3C92-S
3C93 des	1200 ±25%	≈ 1170	≈ 0	ER11/2.5/6-3C93-S
3C94	100 ±3%	≈ 98	≈ 170	ER11/2.5/6-3C94-A100-S
	160 ±5%	≈ 157	≈ 100	ER11/2.5/6-3C94-A160-S
	250 ±8%	≈ 246	≈ 60	ER11/2.5/6-3C94-A250-S
	1400 ±25%	≈ 1370	≈ 0	ER11/2.5/6-3C94-S
3C95 des	1620 ±25%	≈ 1600	≈ 0	ER11/2.5/6-3C95-S
3C96 des	1250 ±25%	≈ 1220	≈ 0	ER11/2.5/6-3C96-S
3F3	100 ±3%	≈ 98	≈ 170	ER11/2.5/6-3F3-A100-S
	160 ±5%	≈ 157	≈ 100	ER11/2.5/6-3F3-A160-S
	250 ±8%	≈ 246	≈ 60	ER11/2.5/6-3F3-A250-S
	1200 ±25%	≈ 1170	≈ 0	ER11/2.5/6-3F3-S
3F35 des	1000 ±25%	≈ 980	≈ 0	ER11/2.5/6-3F35-S
3F4 des	63 ±3%	≈ 62	≈ 280	ER11/2.5/6-3F4-A63-S
	100 ±5%	≈ 98	≈ 160	ER11/2.5/6-3F4-A100-S
	160 ±8%	≈ 157	≈ 85	ER11/2.5/6-3F4-A160-S
	725 ±25%	≈ 710	≈ 0	ER11/2.5/6-3F4-S
3F45 prot	725 ±25%	≈ 710	≈ 0	ER11/2.5/6-3F45-S

Core sets of high permeability grades

Clamping force for A_L measurements,15 ±5 N.

GRADE	A_L (nH)	μ_e	AIR GAP (μm)	TYPE NUMBER
3E5	5000 +40/–30%	≈ 4920	≈ 0	ER11/2.5/6-3E5-S
3E6	6700 +40/–30%	≈ 6590	≈ 0	ER11/2.5/6-3E6-S

Properties of core sets under power conditions

GRADE	B (mT) at	CORE LOSS (W) at				
	H = 250 A/m; f = 25 kHz; T = 100 °C	f = 100 kHz; $\hat{B}$ = 100 mT; T = 100 °C	f = 100 kHz; $\hat{B}$ = 200 mT; T = 25 °C	f = 100 kHz; $\hat{B}$ = 200 mT; T = 100 °C	f = 400 kHz; $\hat{B}$ = 50 mT; T = 100 °C	f = 500 kHz; $\hat{B}$ = 50 mT; T = 100 °C
3C92	≥370	≤ 0.018	–	≤ 0.1	–	–
3C93	≥320	≤ 0.018[1]	–	≤ 0.1[1]	–	–
3C94	≥320	≤ 0.018	–	≤ 0.1	–	–
3C95	≥320	–	≤ 0.11	≤ 0.1	–	–
3C96	≥340	≤ 0.014	–	≤ 0.08	≤ 0.033	≤ 0.065
3F3	≥300	≤ 0.025	–	–	≤ 0.04	–
3F35	≥300	–	–	–	≤ 0.016	≤ 0.023
3F4	≥250	–	–	–	–	–

1. Measured at 140 °C.

Properties of core sets under power conditions (continued)

GRADE	B (mT) at	CORE LOSS (W) at			
	H = 250 A/m; f = 25 kHz; T = 100 °C	f = 500 kHz; $\hat{B}$ = 100 mT; T = 100 °C	f = 1 MHz; $\hat{B}$ = 30 mT; T = 100 °C	f = 1 MHz; $\hat{B}$ = 50 mT; T = 100 °C	f = 3 MHz; $\hat{B}$ = 10 mT; T = 100 °C
3F35	≥300	≤ 0.18	–	–	–
3F4	≥250	–	≤ 0.052	–	≤ 0.084
3F45	≥250	–	≤ 0.04	≤ 0.15	≤ 0.07

COIL FORMERS

General data

PARAMETER	SPECIFICATION
Coil former material	liquid crystal polymer (LCP), glass reinforced, flame retardant in accordance with *"UL 94V-0"*; UL file number E54705(M)
Pin material	copper-tin alloy (CuSn), tin (Sn) plated
Maximum operating temperature	155 °C, *"IEC 60085"*, class F
Resistance to soldering heat	*"IEC 60068-2-20"*, Part 2, Test Tb, method 1B: 350 °C, 3.5 s
Solderability	*"IEC 60068-2-20"*, Part 2, Test Ta, method 1: 235 °C, 2 s

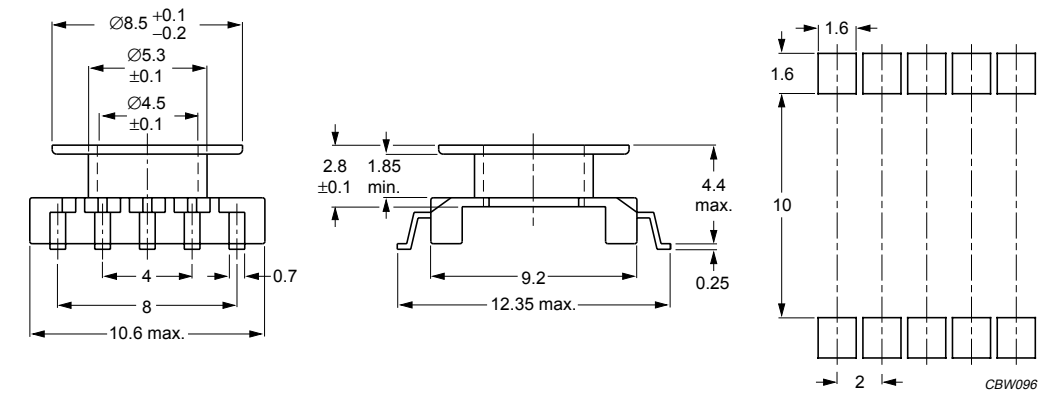

Dimensions in mm.

Fig.2 ER11/2.5/6 coil former (SMD); 10-solder pads.

Winding data and area product for ER11/2.5/6 coil former (SMD)

NUMBER OF SECTIONS	WINDING AREA (mm^2)	MINIMUM WINDING WIDTH (mm)	AVERAGE LENGTH OF TURN (mm)	AREA PRODUCT Ae x Aw (mm^4)	TYPE NUMBER
1	2.8	1.85	21.6	33.3	CPVS-ER11-1S-12P

MOUNTING PARTS

General data and ordering information

ITEM	REMARKS	FIGURE	TYPE NUMBER
Clamp	stainless steel (CrNi); clamping force ≈25 N	3	CLM-ER11

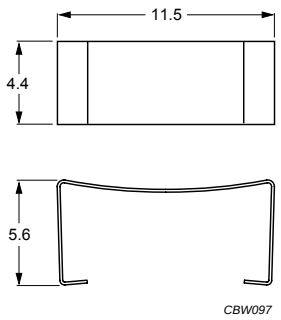

Dimensions in mm.

Fig.3 ER11/2.5/6 clamp.

CORE SETS

Effective core parameters

SYMBOL	PARAMETER	VALUE	UNIT
Σ(l/A)	core factor (C1)	1.08	mm^{-1}
V_e	effective volume	333	mm^3
l_e	effective length	19.0	mm
A_e	effective area	17.6	mm^2
A_{min}	minimum area	17.3	mm^2
m	mass of core half	≈ 0.9	g

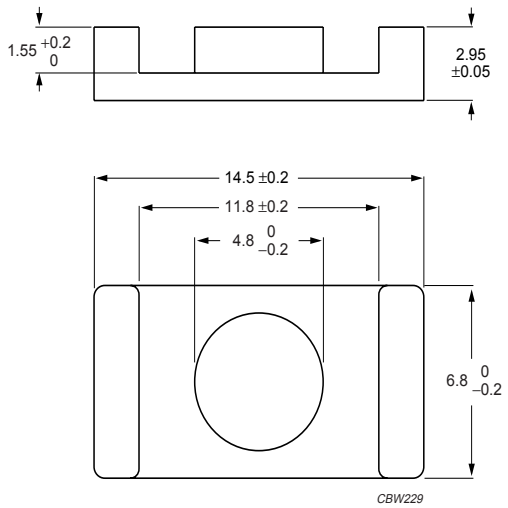

Dimensions in mm.

Fig.1 ER14.5/3/7 core half.

Core sets for general purpose transformers and power applications

Clamping force for A_L measurements, 10 ±5 N.

GRADE	A_L (nH)	μ_e	AIR GAP (μm)	TYPE NUMBER
3C92 des	1 250 ±25%	≈ 1070	≈ 0	ER14.5/3/7-3C92-S
3C93 des	1 400 ±25%	≈ 1200	≈ 0	ER14.5/3/7-3C93-S
3C94	100 ±3%	≈ 86	≈ 250	ER14.5/3/7-3C94-A100-S
	160 ±5%	≈ 137	≈ 150	ER14.5/3/7-3C94-A160-S
	250 ±8%	≈ 215	≈ 90	ER14.5/3/7-3C94-A250-S
	1 600 ±25%	≈ 1370	≈ 0	ER14.5/3/7-3C94-S
3C95 des	1850 ±25%	≈ 1600	≈ 0	ER14.5/3/7-3C95-S
3C96 des	1 500 ±25%	≈ 1290	≈ 0	ER14.5/3/7-3C96-S
3F3	100 ±3%	≈ 86	≈ 250	ER14.5/3/7-3F3-A100-S
	160 ±5%	≈ 137	≈ 150	ER14.5/3/7-3F3-A160-S
	250 ±8%	≈ 215	≈ 90	ER14.5/3/7-3F3-A250-S
	1 400 ±25%	≈ 1200	≈ 0	ER14.5/3/7-3F3-S
3F35 des	1 150 ±25%	≈ 990	≈ 0	ER14.5/3/7-3F35-S
3F4 des	100 ±3%	≈ 86	≈ 240	ER14.5/3/7-3F4-A100-S
	160 ±5%	≈ 137	≈ 130	ER14.5/3/7-3F4-A160-S
	250 ±8%	≈ 215	≈ 70	ER14.5/3/7-3F4-A250-S
	850 ±25%	≈ 730	≈ 0	ER14.5/3/7-3F4-S
3F45 prot	850 ±25%	≈ 730	≈ 0	ER14.5/3/7-3F45-S

Core sets of high permeability grades

Clamping force for A_L measurements.

GRADE	A_L (nH)	μ_e	AIR GAP (μm)	TYPE NUMBER
3E6	7900 +40/–30%	≈ 6800	≈ 0	ER14.5/3/7-3E6-S

Properties of core sets under power conditions

GRADE	B (mT) at	CORE LOSS (W) at				
	H = 250 A/m; f = 25 kHz; T = 100 °C	f = 100 kHz; $\hat{B}$ = 100 mT; T = 100 °C	f = 100 kHz; $\hat{B}$ = 200 mT; T = 25 °C	f = 100 kHz; $\hat{B}$ = 200 mT; T = 100 °C	f = 400 kHz; $\hat{B}$ = 50 mT; T = 100 °C	f = 500 kHz; $\hat{B}$ = 50 mT; T = 100 °C
3C92	≥370	≤ 0.032	–	≤ 0.2	–	–
3C93	≥320	≤ 0.032[1]	–	≤ 0.2[1]	–	–
3C94	≥320	≤ 0.032	–	≤ 0.2	–	–
3C95	≥320	–	≤ 0.2	≤ 0.19	–	–
3C96	≥340	≤ 0.025	–	≤ 0.16	≤ 0.06	≤ 0.13
3F3	≥300	≤ 0.043	–	–	≤ 0.061	–
3F35	≥300	–	–	–	≤ 0.03	≤ 0.045
3F4	≥250	–	–	–	–	–

1. Measured at 140 °C.

Properties of core sets under power conditions (continued)

GRADE	B (mT) at	CORE LOSS (W) at			
	H = 250 A/m; f = 25 kHz; T = 100 °C	f = 500 kHz; $\hat{B}$ = 100 mT; T = 100 °C	f = 1 MHz; $\hat{B}$ = 30 mT; T = 100 °C	f = 1 MHz; $\hat{B}$ = 50 mT; T = 100 °C	f = 3 MHz; $\hat{B}$ = 10 mT; T = 100 °C
3F35	≥300	≤ 0.35	–	–	–
3F4	≥250	–	≤ 0.1	–	≤ 0.16
3F45	≥250	–	≤ 0.077	≤ 0.29	≤ 0.13

COIL FORMERS

General data

PARAMETER	SPECIFICATION
Coil former material	liquid crystal polymer (LCP), glass reinforced, flame retardant in accordance with *"UL 94V-0"*; UL file number E54705(M)
Pin material	copper-tin alloy (CuSn), tin (Sn) plated
Maximum operating temperature	155 °C, *"IEC 60085"*, class F
Resistance to soldering heat	*"IEC 60068-2-20"*, Part 2, Test Tb, method 1B: 350 °C, 3.5 s
Solderability	*"IEC 60068-2-20"*, Part 2, Test Ta, method 1: 235 °C, 2 s

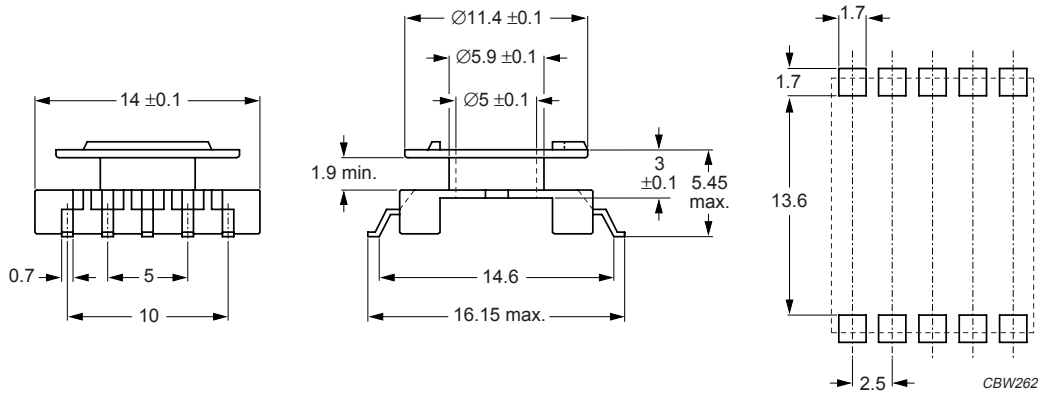

Dimensions in mm.

Fig.2 ER14.5/3/7 coil former (SMD); 10-solder pads.

Winding data and area product for ER14.5/3/7 coil former (SMD) with 10 solder pads

NUMBER OF SECTIONS	WINDING AREA (mm^2)	MINIMUM WINDING WIDTH (mm)	AVERAGE LENGTH OF TURN (mm)	AREA PRODUCT Ae x Aw (mm^4)	TYPE NUMBER
1	5.1	1.9	27	89.8	CPVS-ER14.5-1S-10P-Z

MOUNTING PARTS

General data and ordering information

ITEM	REMARKS	FIGURE	TYPE NUMBER
Clamp	stainless steel (CrNi)	3	CLM-ER14.5

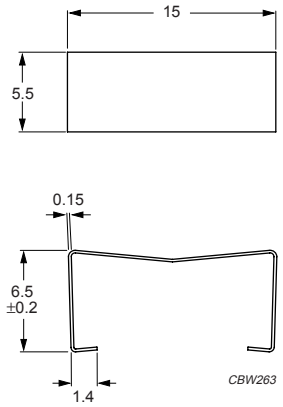

Dimensions in mm.

Fig.3 ER14.5/3/7 clamp.

CORE SETS

Effective core parameters

SYMBOL	PARAMETER	VALUE	UNIT
Σ(l/A)	core factor (C1)	0.730	mm^{-1}
V_e	effective volume	667	mm^3
l_e	effective length	22.1	mm
A_e	effective area	30.2	mm^2
A_{min}	minimum area	30.1	mm^2
m	mass of core half	≈ 1.6	g

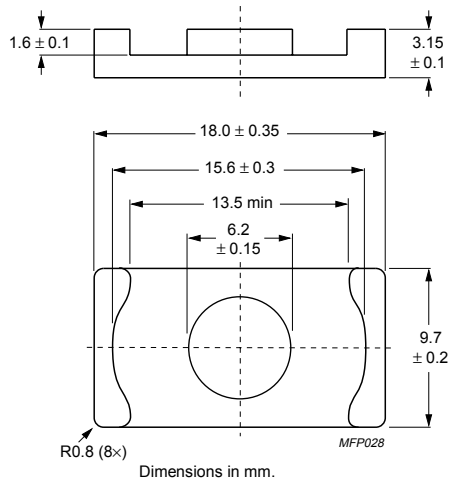

Fig.1 ER18/3.2/10 core half.

Core sets for general purpose transformers and power applications

Clamping force for A_L measurements, 15 ± 5 N.

GRADE	A_L (nH)	μ_e	AIR GAP (μm)	TYPE NUMBER
3C92 des	160 ± 3 %	≈ 93	≈ 260	ER18/3.2/10-3C92-A160-S
	250 ± 5 %	≈ 146	≈ 150	ER18/3.2/10-3C92-A250-S
	400 ± 8 %	≈ 232	≈ 85	ER18/3.2/10-3C92-A400-S
	1900 ± 25 %	≈ 1 100	≈ 0	ER18/3.2/10-3C92-S
3C93 des	2200 ± 25 %	≈ 1270	≈ 0	ER18/3.2/10-3C93-S
3C95 des	3120 ± 25 %	≈ 1810	≈ 0	ER18/3.2/10-3C95-S
3C96 des	160 ± 3 %	≈ 93	≈ 260	ER18/3.2/10-3C96-A160-S
	250 ± 5 %	≈ 146	≈ 155	ER18/3.2/10-3C96-A250-S
	400 ± 8 %	≈ 232	≈ 90	ER18/3.2/10-3C96-A400-S
	2400 ± 25 %	≈ 1 100	≈ 0	ER18/3.2/10-3C96-S
3F3	2400 ± 25 %	≈ 1 100	≈ 0	ER18/3.2/10-3F3-S
3F35 des	160 ± 3 %	≈ 93	≈ 260	ER18/3.2/10-3F35-A160-S
	250 ± 5 %	≈ 146	≈ 150	ER18/3.2/10-3F35-A250-S
	400 ± 8 %	≈ 232	≈ 85	ER18/3.2/10-3F35-A400-S
	1800 ± 25 %	≈ 1100	≈ 0	ER18/3.2/10-3F35-S
3F4 des	1300 ± 25 %	≈ 794	≈ 0	ER18/3.2/10-3F4-S
3F45 prot	1300 ± 25 %	≈ 794	≈ 0	ER18/3.2/10-3F45-S

Properties of core sets under power condition

GRADE	B (mT) at	CORE LOSS (W) at					
	H = 250 A/m; f = 25 kHz; T = 100 °C	f = 100 kHz; $\hat{B}$ = 100 mT; T = 100 °C	f = 100 kHz; $\hat{B}$ = 200 mT; T = 25 °C	f = 100 kHz; $\hat{B}$ = 200 mT; T = 100 °C	f = 400 kHz; $\hat{B}$ = 50 mT; T = 100 °C	f = 500 kHz; $\hat{B}$ = 50 mT; T = 100 °C	f = 500 kHz; $\hat{B}$ = 100 mT; T = 100 °C
3C92	≥ 370	≤ 0.052	–	≤ 0.35	–	–	–
3C93	≥ 320	≤ 0.052(1)	–	≤ 0.35(1)	–	–	–
3C95	≥ 320	–	≤ 0.4	≤ 0.38	–	–	–
3C96	≥ 340	≤ 0.035	–	≤ 0.26	–	≤ 0.22	–
3F3	≥ 300	≤ 0.07	–	–	≤ 0.13	–	–
3F35	≥ 300	–	–	–	–	≤ 0.078	≤ 0.61

1. Measured at 140 °C.

Properties of core sets under power condition (continued)

GRADE	B (mT) at	CORE LOSS (W) at		
	H = 1200 A/m; f = 25 kHz; T = 100 °C	f = 1 MHz; $\hat{B}$ = 30 mT; T = 100 °C	f = 1 MHz; $\hat{B}$ = 50 mT; T = 100 °C	f = 3 MHz; $\hat{B}$ = 10 mT; T = 100 °C
3F4	≥ 250	≤ 0.2	–	≤ 0.32
3F45	≥ 250	≤ 0.16	≤ 0.6	≤ 0.27

MOUNTING INFORMATION

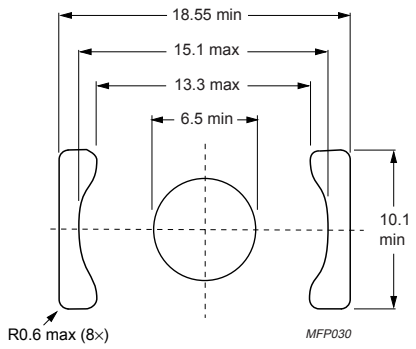

Fig.2 Recommended PCB cut-out for ER18/3.2/10 cores.

Winding data for ER18/3.2/10 planar core

WINDING AREA (mm^2)	AVERAGE TRACK LENGTH (mm)	FOOTPRINT AREA (mm^2)
15.0	34.2	225

CORE SETS

Effective core parameters

SYMBOL	PARAMETER	VALUE	UNIT
$\Sigma(l/A)$	core factor (C1)	0.530	mm^{-1}
V_e	effective volume	1340	mm^3
l_e	effective length	26.6	mm
A_e	effective area	50.2	mm^2
A_{min}	minimum area	50.0	mm^2
m	mass of core half	≈ 3.2	g

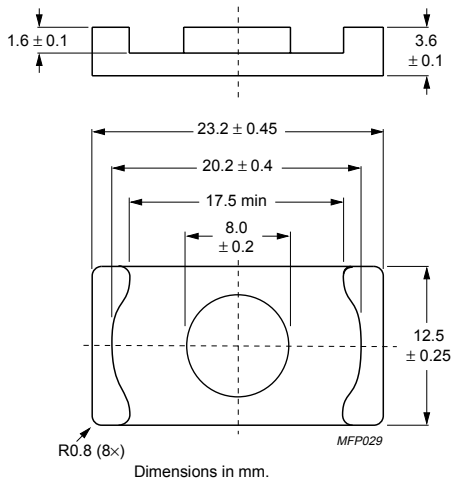

Fig.1 ER23/3.6/13 core half.

Core sets for general purpose transformers and power applications

Clamping force for A_L measurements, 20 ± 10 N.

GRADE	A_L (nH)	μ_e	AIR GAP (μm)	TYPE NUMBER
3C92 des	250 ± 3 %	≈ 105	≈ 260	ER23/3.6/13-3C92-A250-S
	400 ± 5 %	≈ 169	≈ 150	ER23/3.6/13-3C92-A400-S
	630 ± 8 %	≈ 266	≈ 85	ER23/3.6/13-3C92-A630-S
	2800 ± 25 %	≈ 1180	≈ 0	ER23/3.6/13-3C92-S
3C93 des	3200 ± 25 %	≈ 1350	≈ 0	ER23/3.6/13-3C93-S
3C95 des	4460 ± 25 %	≈ 1880	≈ 0	ER23/3.6/13-3C95-S
3C96 des	250 ± 3 %	≈ 105	≈ 270	ER23/3.6/13-3C96-A250-S
	400 ± 5 %	≈ 169	≈ 155	ER23/3.6/13-3C96-A400-S
	630 ± 8 %	≈ 266	≈ 90	ER23/3.6/13-3C96-A630-S
	3400 ± 25 %	≈ 1180	≈ 0	ER23/3.6/13-3C96-S
3F3	3400 ± 25 %	≈ 1180	≈ 0	ER23/3.6/13-3F3-S
3F35 des	250 ± 3 %	≈ 105	≈ 260	ER23/3.6/13-3F35-A250-S
	400 ± 5 %	≈ 169	≈ 150	ER23/3.6/13-3F35-A400-S
	630 ± 8 %	≈ 266	≈ 85	ER23/3.6/13-3F35-A630-S
	2600 ± 25 %	≈ 1180	≈ 0	ER23/3.6/13-3F35-S
3F4 des	1850 ± 25 %	≈ 840	≈ 0	ER23/3.6/13-3F4-S
3F45 prot	1850 ± 25 %	≈ 840	≈ 0	ER23/3.6/13-3F45-S

Properties of core sets under power condition

GRADE	B (mT) at	CORE LOSS (W) at					
	H = 250 A/m; f = 25 kHz; T = 100 °C	f = 100 kHz; $\hat{B}$ = 100 mT; T = 100 °C	f = 100 kHz; $\hat{B}$ = 200 mT; T = 25 °C	f = 100 kHz; $\hat{B}$ = 200 mT; T = 100 °C	f = 400 kHz; $\hat{B}$ = 50 mT; T = 100 °C	f = 500 kHz; $\hat{B}$ = 50 mT; T = 100 °C	f = 500 kHz; $\hat{B}$ = 100 mT; T = 100 °C
3C92	≥ 370	≤ 0.11	–	≤ 0.70	–	–	–
3C93	≥ 320	≤ 0.11[1]	–	≤ 0.70[1]	–	–	–
3C95	≥ 320	–	≤ 0.87	≤ 0.82	–	–	–
3C96	≥ 340	≤ 0.070	–	≤ 0.52	–	≤ 0.44	–
3F3	≥ 300	≤ 0.15	–	–	≤ 0.31	–	–
3F35	≥ 300	–	–	–	–	≤ 0.16	≤ 1.2

1. Measured at 140 °C.

Properties of core sets under power condition (continued)

GRADE	B (mT) at	CORE LOSS (W) at		
	H = 1200 A/m; f = 25 kHz; T = 100 °C	f = 1 MHz; $\hat{B}$ = 30 mT; T = 100 °C	f = 1 MHz; $\hat{B}$ = 50 mT; T = 100 °C	f = 3 MHz; $\hat{B}$ = 10 mT; T = 100 °C
3F4	≥ 250	≤ 0.4	–	≤ 0.64
3F45	≥ 250	≤ 0.31	≤ 1.15	≤ 0.53

MOUNTING INFORMATION

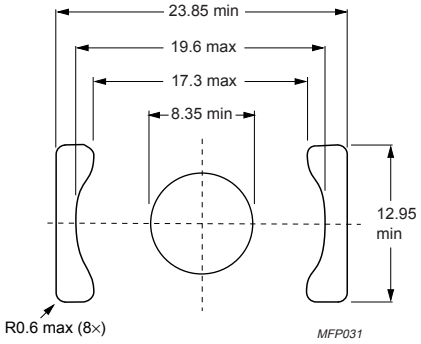

Fig.2 Recommended PCB cut-out for ER23/3.6/13 cores.

Winding data for ER23/3.6/13 planar core

WINDING AREA (mm^2)	AVERAGE TRACK LENGTH (mm)	FOOTPRINT AREA (mm^2)
19.5	44.3	375

CORE SETS

Effective core parameters

SYMBOL	PARAMETER	VALUE	UNIT
Σ(l/A)	core factor (C1)	0.270	mm^{-1}
V_e	effective volume	5400	mm^3
l_e	effective length	38.2	mm
A_e	effective area	141	mm^2
A_{min}	minimum area	121	mm^2
m	mass of core half	≈ 16	g

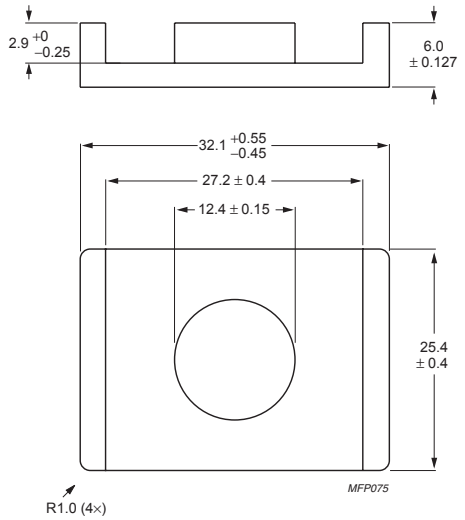

Dimensions in mm.

Fig.1 ER32/6/25 core half.

Core sets for general purpose transformers and power applications

Clamping force for A_L measurements, 50 ± 20 N.

GRADE	A_L (nH)	μ_e	AIR GAP (μm)	TYPE NUMBER
3C92 des	5700 ± 25 %	≈ 1220	≈ 0	ER32/6/25-3C92-S
3C93 des	6600 ± 25 %	≈ 1420	≈ 0	ER32/6/25-3C93-S
3C95 des	9640 ± 25 %	≈ 2080	≈ 0	ER32/6/25-3C95-S
3C96 des	7160 ± 25 %	≈ 1540	≈ 0	ER32/6/25-3C96-S
3F3	7160 ± 25 %	≈ 1540	≈ 0	ER32/6/25-3F3-S

Properties of core sets under power conditions

GRADE	B (mT) at	CORE LOSS (W) at				
	H = 250 A/m; f = 25 kHz; T = 100 °C	f = 100 kHz; $\hat{B}$ = 100 mT; T = 100 °C	f = 100 kHz; $\hat{B}$ = 200 mT; T = 25 °C	f = 100 kHz; $\hat{B}$ = 200 mT; T = 100 °C	f = 400 kHz; $\hat{B}$ = 50 mT; T = 100 °C	f = 500 kHz; $\hat{B}$ = 50 mT; T = 100 °C
3C92	≥ 370	≤ 0.45	–	≤ 3.0	–	–
3C93	≥ 320	≤ 0.45[1]	–	≤ 3.0[1]	–	–
3C95	≥ 320	–	≤ 3.5	≤ 3.33	–	–
3C96	≥ 340	≤ 0.3	–	≤ 2.2	–	≤ 1.9
3F3	≥ 300	≤ 0.65	–	–	≤ 1.0	–

1. Measured at 140 °C.

MOUNTING INFORMATION

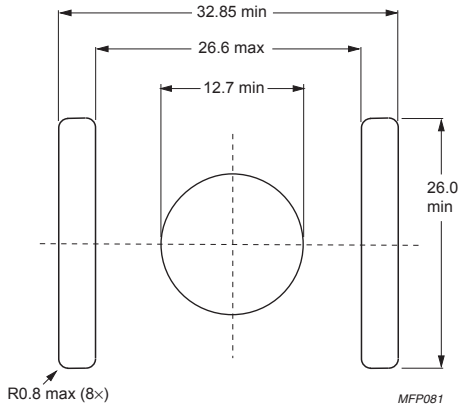

Fig.2 Recommended PCB cut-out for ER32/6/25 cores.

Winding data for ER32/6/25 planar core

WINDING AREA (mm^2)	AVERAGE TRACK LENGTH (mm)	FOOTPRINT AREA (mm^2)
41.1	62.2	828

CORE SETS

Effective core parameters

SYMBOL	PARAMETER	VALUE	UNIT
Σ(l/A)	core factor (C1)	0.253	mm^{-1}
V_e	effective volume	12900	mm^3
l_e	effective length	57.0	mm
A_e	effective area	225	mm^2
A_{min}	minimum area	201	mm^2
m	mass of core half	≈ 37	g

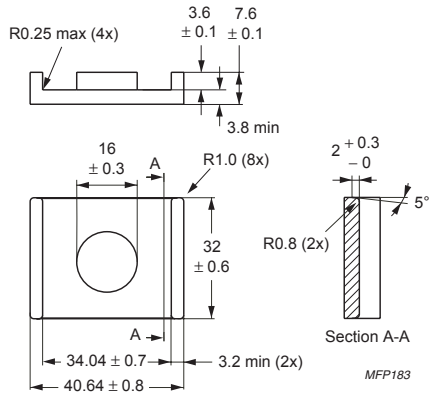

Dimensions in mm.

Fig.1 ER41/7.6/32 core half.

Core halves for general purpose transformers and power applications

Clamping force for A_L measurements, 100 ± 25 N.

GRADE	A_L (nH)	μ_e	AIR GAP (μm)	TYPE NUMBER
3C92 des	6500 ± 25 %	≈ 1310	≈ 0	ER41/7.6/32-3C92
3C93 des	7500 ± 25 %	≈ 1510	≈ 0	ER41/7.6/32-3C93
3C95 des	11120 ± 25 %	≈ 2240	≈ 0	ER41/7.6/32-3C95
3C96 des	8100 ± 25 %	≈ 1630	≈ 0	ER41/7.6/32-3C96
3F3	8100 ± 25 %	≈ 1630	≈ 0	ER41/7.6/32-3F3

Properties of core sets under power conditions

GRADE	B (mT) at	CORE LOSS (W) at				
	H = 250 A/m; f = 25 kHz; T = 100 °C	f = 100 kHz; $\hat{B}$ = 100 mT; T = 100 °C	f = 100 kHz; $\hat{B}$ = 200 mT; T = 25 °C	f = 100 kHz; $\hat{B}$ = 200 mT; T = 100 °C	f = 400 kHz; $\hat{B}$ = 50 mT; T = 100 °C	f = 500 kHz; $\hat{B}$ = 50 mT; T = 100 °C
3C92	≥ 370	≤ 1.3	–	≤ 7.8	–	–
3C93	≥ 320	≤ 1.3 (1)	–	≤ 7.8 (1)	–	–
3C95	≥ 320	–	≤ 8.94	≤ 8.51	–	–
3C96	≥ 340	≤ 0.92	–	≤ 5.88	–	≤ 5.58
3F3	≥ 300	≤ 1.7	–	–	≤ 2.5	–

1. Measured at 140 °C.

MOUNTING INFORMATION

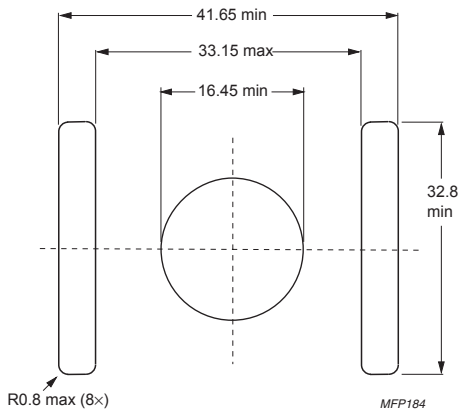

Fig.2 Recommended PCB cut-out for ER41/7.6/32 cores.

Winding data for ER41/7.6/32 planar core

WINDING AREA (mm^2)	AVERAGE TRACK LENGTH (mm)	FOOTPRINT AREA (mm^2)
64.9	78.6	1316

CORE SETS

Effective core parameters

SYMBOL	PARAMETER	VALUE	UNIT
Σ(l/A)	core factor (C1)	0.209	mm^{-1}
V_e	effective volume	25800	mm^3
l_e	effective length	73.5	mm
A_e	effective area	351	mm^2
A_{min}	minimum area	314	mm^2
m	mass of core half	≈ 74.7	g

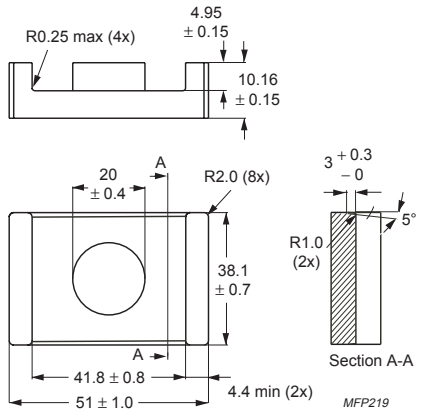

Dimensions in mm.

Fig.1 ER51/10/38 core half.

Core halves for general purpose transformers and power applications

Clamping force for A_L measurements, 150 ± 25 N.

GRADE	A_L (nH)	μ_e	AIR GAP (μm)	TYPE NUMBER
3C92 des	8100 ± 25 %	≈ 1350	≈ 0	ER51/10/38-3C92
3C93 des	9400 ± 25 %	≈ 1570	≈ 0	ER51/10/38-3C93
3C95 des	14230 ± 25 %	≈ 2370	≈ 0	ER51/10/38-3C95
3C96 des	10200 ± 25 %	≈ 1700	≈ 0	ER51/10/38-3C96
3F3	10200 ± 25 %	≈ 1700	≈ 0	ER51/10/38-3F3

Properties of core sets under power conditions

GRADE	B (mT) at	CORE LOSS (W) at				
	H = 250 A/m; f = 25 kHz; T = 100 °C	f = 100 kHz; $\hat{B}$ = 100 mT; T = 100 °C	f = 100 kHz; $\hat{B}$ = 200 mT; T = 25 °C	f = 100 kHz; $\hat{B}$ = 200 mT; T = 100 °C	f = 400 kHz; $\hat{B}$ = 50 mT; T = 100 °C	f = 500 kHz; $\hat{B}$ = 50 mT; T = 100 °C
3C92	≥ 370	≤ 2.5	–	≤ 15.2	–	–
3C93	≥ 320	≤ 2.5 (1)	–	≤ 15.2 (1)	–	–
3C95	≥ 320	–	≤ 17.9	≤ 17	–	–
3C96	≥ 340	≤ 1.68	–	≤ 11.2	–	≤ 10.5
3F3	≥ 300	≤ 3.2	–	–	≤ 5.0	–

1. Measured at 140 °C.

MOUNTING INFORMATION

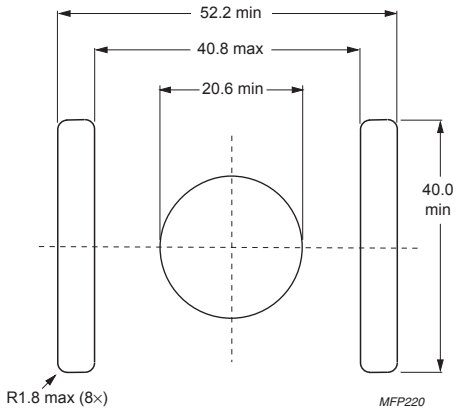

Fig.2 Recommended PCB cut-out for ER51/10/38 cores.

Winding data for ER51/10/38 planar core

WINDING AREA (mm^2)	AVERAGE TRACK LENGTH (mm)	FOOTPRINT AREA (mm^2)
108	97.1	1986

CORE SETS

Effective core parameters

SYMBOL	PARAMETER	VALUE	UNIT
Σ(l/A)	core factor (C1)	0.164	mm^{-1}
V_e	effective volume	52600	mm^3
l_e	effective length	93.0	mm
A_e	effective area	566	mm^2
A_{min}	minimum area	507	mm^2
m	mass of core half	≈ 152	g

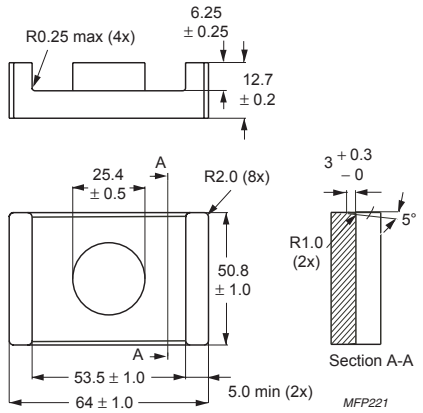

Dimensions in mm.

Fig.1 ER64/13/51 core half.

Core halves for general purpose transformers and power applications

Clamping force for A_L measurements, 200 ± 25 N.

GRADE	A_L (nH)	μ_e	AIR GAP (μm)	TYPE NUMBER
3C92 des	10600 ± 25 %	≈ 1390	≈ 0	ER64/13/51-3C92
3C93 des	12300 ± 25 %	≈ 1610	≈ 0	ER64/13/51-3C93
3C95 des	18920 ± 25 %	≈ 2475	≈ 0	ER64/13/51-3C95
3C96 des	13400 ± 25 %	≈ 1760	≈ 0	ER64/13/51-3C96
3F3	13400 ± 25 %	≈ 1760	≈ 0	ER64/13/51-3F3

Properties of core sets under power conditions

GRADE	B (mT) at	CORE LOSS (W) at				
	H = 250 A/m; f = 25 kHz; T = 100 °C	f = 100 kHz; $\hat{B}$ = 100 mT; T = 100 °C	f = 100 kHz; $\hat{B}$ = 200 mT; T = 25 °C	f = 100 kHz; $\hat{B}$ = 200 mT; T = 100 °C	f = 400 kHz; $\hat{B}$ = 50 mT; T = 100 °C	f = 500 kHz; $\hat{B}$ = 50 mT; T = 100 °C
3C92	≥ 370	≤ 5.3	–	≤ 32.4	–	–
3C93	≥ 320	≤ 5.3 (1)	–	≤ 32.4 (1)	–	–
3C95	≥ 320	–	≤ 36.5	≤ 34.7	–	–
3C96	≥ 340	≤ 3.71	–	≤ 24	–	≤ 22.7
3F3	≥ 300	≤ 6.3	–	–	≤ 10.2	–

1. Measured at 140 °C.

MOUNTING INFORMATION

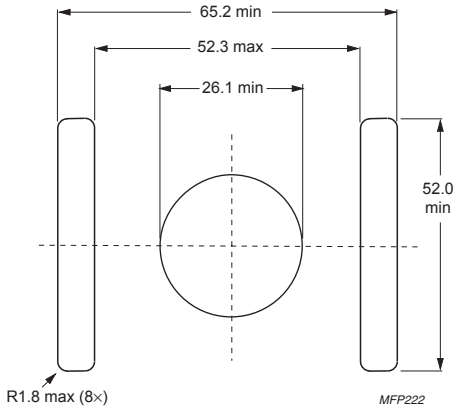

Fig.2 Recommended PCB cut-out for ER64/13/51 cores.

Winding data for ER64/13/51 planar core

WINDING AREA (mm^2)	AVERAGE TRACK LENGTH (mm)	FOOTPRINT AREA (mm^2)
176	124	3282

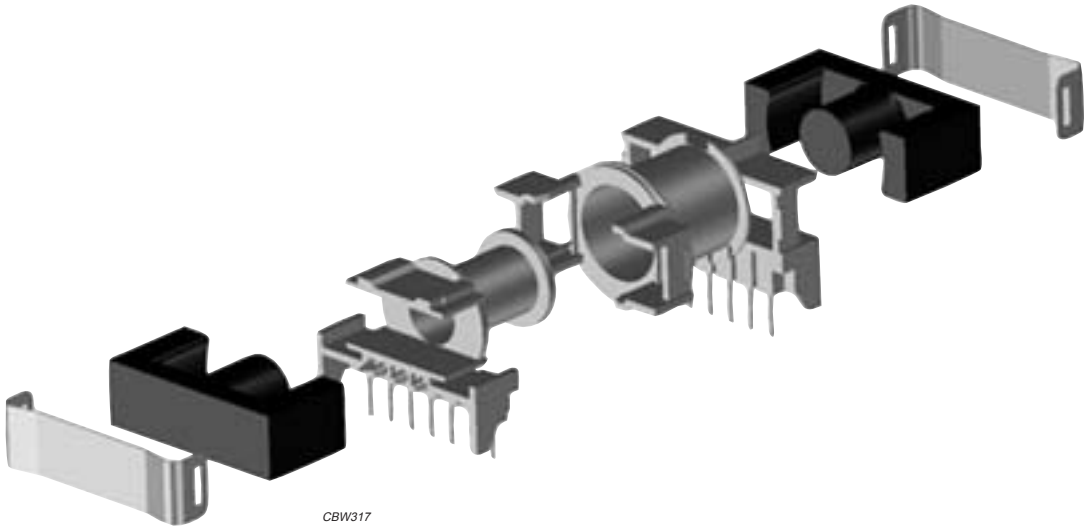
CBW317

PRODUCT OVERVIEW AND TYPE NUMBER STRUCTURE

Product overview ETD cores

CORE TYPE	V_e (mm^3)	A_e (mm^2)	MASS (g)
ETD29/16/10	5470	76.0	14
ETD34/17/11	7640	97.1	20
ETD39/20/13	11500	125	30
ETD44/22/15	17800	173	47
ETD49/25/16	24000	211	62
ETD54/28/19	35500	280	90
ETD59/31/22	51500	368	130

- In accordance with IEC 62317, part 6.

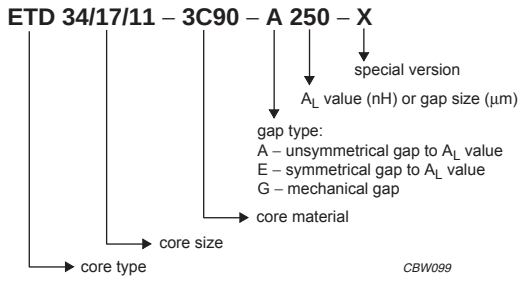

Fig.1 Type number structure for cores.

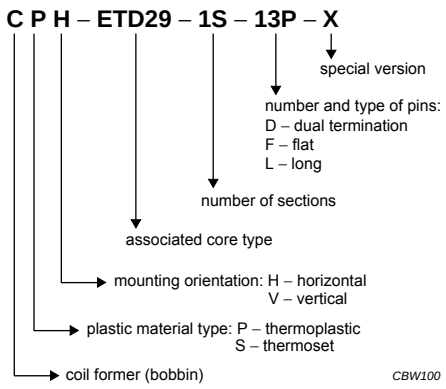

Fig.2 Type number structure for coil formers.

CORE SETS

Effective core parameters

SYMBOL	PARAMETER	VALUE	UNIT
$\Sigma(l/A)$	core factor (C1)	0.947	mm^{-1}
V_e	effective volume	5470	mm^3
l_e	effective length	72.0	mm
A_e	effective area	76.0	mm^2
A_{min}	minimum area	71.0	mm^2
m	mass of core half	≈ 14	g

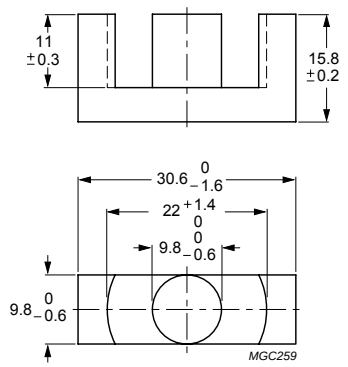

Dimensions in mm.

Fig.1 ETD29/16/10 core half.

Core halves

Clamping force for A_L measurements, 40 ±20 N. Gapped cores are available on request.

GRADE	A_L (nH)	μ_e	AIR GAP (μm)	TYPE NUMBER
3C90	2350 ±25%	≈ 1770	≈ 0	ETD29/16/10-3C90
3C94	2350 ±25%	≈ 1770	≈ 0	ETD29/16/10-3C94
3C95 des	2860 ±25%	≈ 2160	≈ 0	ETD29/16/10-3C95
3C96 des	2200 ±25%	≈ 1660	≈ 0	ETD29/16/10-3C96
3F3	2200 ±25%	≈ 1660	≈ 0	ETD29/16/10-3F3
3F35 des	1600 ±25%	≈ 1210	≈ 0	ETD29/16/10-3F35

Properties of core sets under power conditions

GRADE	B (mT) at	CORE LOSS (W) at				
	H = 250 A/m; f = 25 kHz; T = 100 °C	f = 25 kHz; $\hat{B}$ = 200 mT; T = 100 °C	f = 100 kHz; $\hat{B}$ = 100 mT; T = 100 °C	f = 100 kHz; $\hat{B}$ = 200 mT; T = 25 °C	f = 100 kHz; $\hat{B}$ = 200 mT; T = 100 °C	f = 400 kHz; $\hat{B}$ = 50 mT; T = 100 °C
3C90	≥330	≤ 0.66	≤ 0.69	–	–	–
3C94	≥330	–	≤ 0.5	–	≤ 3.0	–
3C95	≥330	–	–	≤ 3.23	≤ 3.06	–
3C96	≥340	–	≤ 0.37	–	≤ 2.4	–
3F3	≥320	–	≤ 0.65	–	–	≤ 1.1
3F35	≥300	–	–	–	–	–

Properties of core sets under power conditions (continued)

GRADE	B (mT) at	CORE LOSS (W) at			
	H = 250 A/m; f = 25 kHz; T = 100 °C	f = 500 kHz; $\hat{B}$ = 50 mT; T = 100 °C	f = 500 kHz; $\hat{B}$ = 100 mT; T = 100 °C	f = 1 MHz; $\hat{B}$ = 30 mT; T = 100 °C	f = 3 MHz; $\hat{B}$ = 10 mT; T = 100 °C
3C90	≥330	–	–	–	–
3C94	≥330	–	–	–	–
3C95	≥330	–	–	–	–
3C96	≥340	≤ 2.0	–	–	–
3F3	≥320	–	–	–	–
3F35	≥300	≤ 0.74	≤ 5.7	–	–

COIL FORMER

General data 13-pins ETD29/16/10 coil former

PARAMETER	SPECIFICATION
Coil former material	polybutyleneterephtalate (PBT), glass-reinforced, flame retardant in accordance with *"UL 94V-0"*; UL file number E45329(R)
Pin material	copper-tin alloy (CuSn), tin (Sn) plated
Maximum operating temperature	155 °C, *"IEC 60085"*, class F
Resistance to soldering heat	*"IEC 60068-2-20"*, Part 2, Test Tb, method 1B, 350 °C, 3.5 s
Solderability	*"IEC 60068-2-20"*, Part 2, Test Ta, method 1

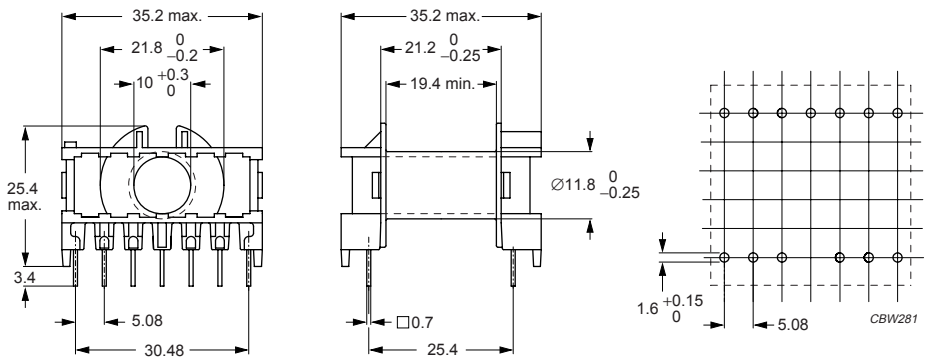

Dimensions in mm.

Fig.2 ETD29/16/10 coil former; 13-pins.

Winding data and area product for 13-pins ETD29/16/10 coil former

NUMBER OF SECTIONS	WINDING AREA (mm^2)	MINIMUM WINDING WIDTH (mm)	AVERAGE LENGTH OF TURN (mm)	AREA PRODUCT Ae x Aw (mm^4)	TYPE NUMBER
1	95	19.4	53	7220	CPH-ETD29-1S-13P

MOUNTING PARTS

General data

ITEM	REMARKS	FIGURE	TYPE NUMBER
Mounting clip	material: stainless steel	3	CLI-ETD29

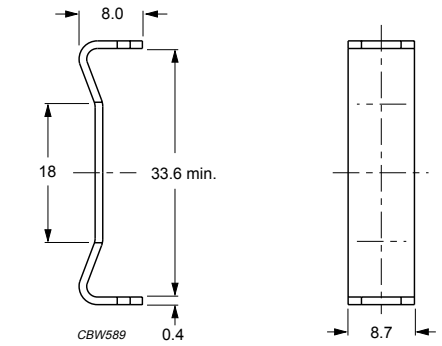

Dimensions in mm.

Fig.3 Mounting clip for ETD29/16/10.

CORE SETS

Effective core parameters

SYMBOL	PARAMETER	VALUE	UNIT
$\Sigma(l/A)$	core factor (C1)	0.810	mm^{-1}
V_e	effective volume	7640	mm^3
l_e	effective length	78.6	mm
A_e	effective area	97.1	mm^2
A_{min}	minimum area	91.6	mm^2
m	mass of core half	≈ 20	g

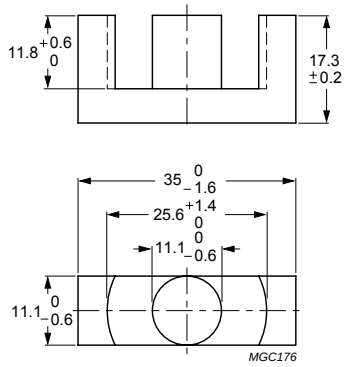

Dimensions in mm.

Fig.1 ETD34/17/11 core half.

Core halves

Clamping force for A_L measurements, 40 ±20 N. Gapped cores are available on request.

GRADE	A_L (nH)	μ_e	AIR GAP (μm)	TYPE NUMBER
3C90	2700 ±25%	≈ 1740	≈ 0	ETD34/17/11-3C90
3C94	2700 ±25%	≈ 1740	≈ 0	ETD34/17/11-3C94
3C95 des	3270 ±25%	≈ 2110	≈ 0	ETD34/17/11-3C95
3C96 des	2500 ±25%	≈ 1610	≈ 0	ETD34/17/11-3C96
3F3	2500 ±25%	≈ 1610	≈ 0	ETD34/17/11-3F3
3F35 des	1850 ±25%	≈ 1190	≈ 0	ETD34/17/11-3F35

Properties of core sets under power conditions

GRADE	B (mT) at	CORE LOSS (W) at				
	H = 250 A/m; f = 25 kHz; T = 100 °C	f = 25 kHz; $\hat{B}$ = 200 mT; T = 100 °C	f = 100 kHz; $\hat{B}$ = 100 mT; T = 100 °C	f = 100 kHz; $\hat{B}$ = 200 mT; T = 25 °C	f = 100 kHz; $\hat{B}$ = 200 mT; T = 100 °C	f = 400 kHz; $\hat{B}$ = 50 mT; T = 100 °C
3C90	≥330	≤ 0.92	≤ 0.97	–	–	–
3C94	≥330	–	≤ 0.73	–	≤ 4.2	–
3C95	≥330	–	–	≤ 4.51	≤ 4.28	–
3C96	≥340	–	≤ 0.55	–	≤ 3.4	–
3F3	≥320	–	≤ 0.9	–	–	≤ 1.6
3F35	≥300	–	–	–	–	–

Properties of core sets under power conditions (continued)

GRADE	B (mT) at	CORE LOSS (W) at			
	H = 250 A/m; f = 25 kHz; T = 100 °C	f = 500 kHz; $\hat{B}$ = 50 mT; T = 100 °C	f = 500 kHz; $\hat{B}$ = 100 mT; T = 100 °C	f = 1 MHz; $\hat{B}$ = 30 mT; T = 100 °C	f = 3 MHz; $\hat{B}$ = 10 mT; T = 100 °C
3C90	≥330	–	–	–	–
3C94	≥330	–	–	–	–
3C95	≥330	–	–	–	–
3C96	≥340	≤ 2.8	–	–	–
3F3	≥320	–	–	–	–
3F35	≥300	≤ 1.0	≤ 8.0	–	–

COIL FORMERS

General data 14-pins ETD34/17/11 coil former

PARAMETER	SPECIFICATION
Coil former material	polybutyleneterephtalate (PBT), glass-reinforced, flame retardant in accordance with *"UL 94V-0"*; UL file number E45329(R)
Pin material	copper-tin alloy (CuSn), tin (Sn) plated
Maximum operating temperature	155 °C, *"IEC 60085"*, class F
Resistance to soldering heat	*"IEC 60068-2-20"*, Part 2, Test Tb, method 1B, 350 °C, 3.5 s
Solderability	*"IEC 60068-2-20"*, Part 2, Test Ta, method 1

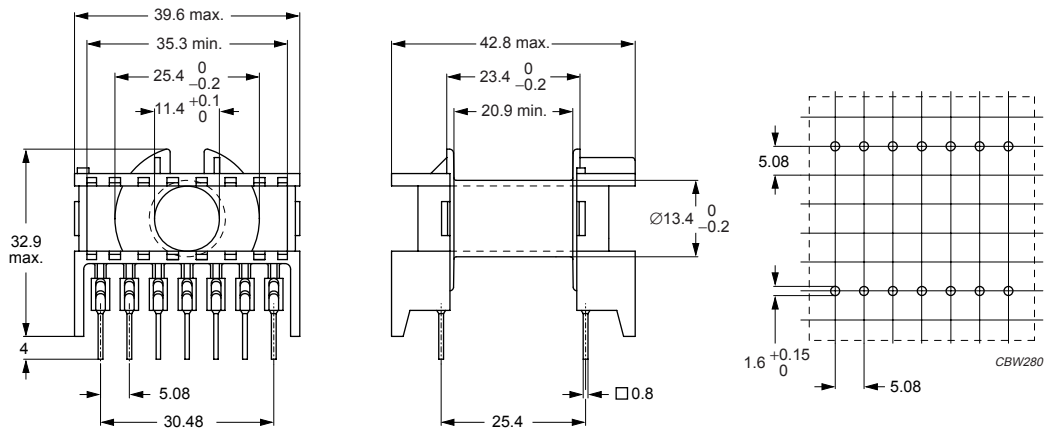

Dimensions in mm.

Fig.2 ETD34/17/11 coil former; 14-pins.

Winding data and area product for 14-pins ETD34/17/11 coil former

NUMBER OF SECTIONS	WINDING AREA (mm^2)	MINIMUM WINDING WIDTH (mm)	AVERAGE LENGTH OF TURN (mm)	AREA PRODUCT Ae x Aw (mm^4)	TYPE NUMBER
1	123	20.9	60	11900	CPH-ETD34-1S-14P[1]

Note

1. Also available with ∅1.0 mm pins.

General data 14-pins coaxial ETD34/17/11 coil former

PARAMETER	SPECIFICATION
Coil former material	phenolformaldehyde (PF), glass-reinforced, flame retardant in accordance with *"UL 94V-0"*; UL file number E167521(M)
Pin material	copper-tin alloy (CuSn), tin (Sn) plated
Maximum operating temperature	180 °C, *"IEC 60085"*, class H
Resistance to soldering heat	*"IEC 60068-2-20"*, Part 2, Test Tb, method 1B, 350 °C, 3.5 s
Solderability	*"IEC 60068-2-20"*, Part 2, Test Ta, method 1

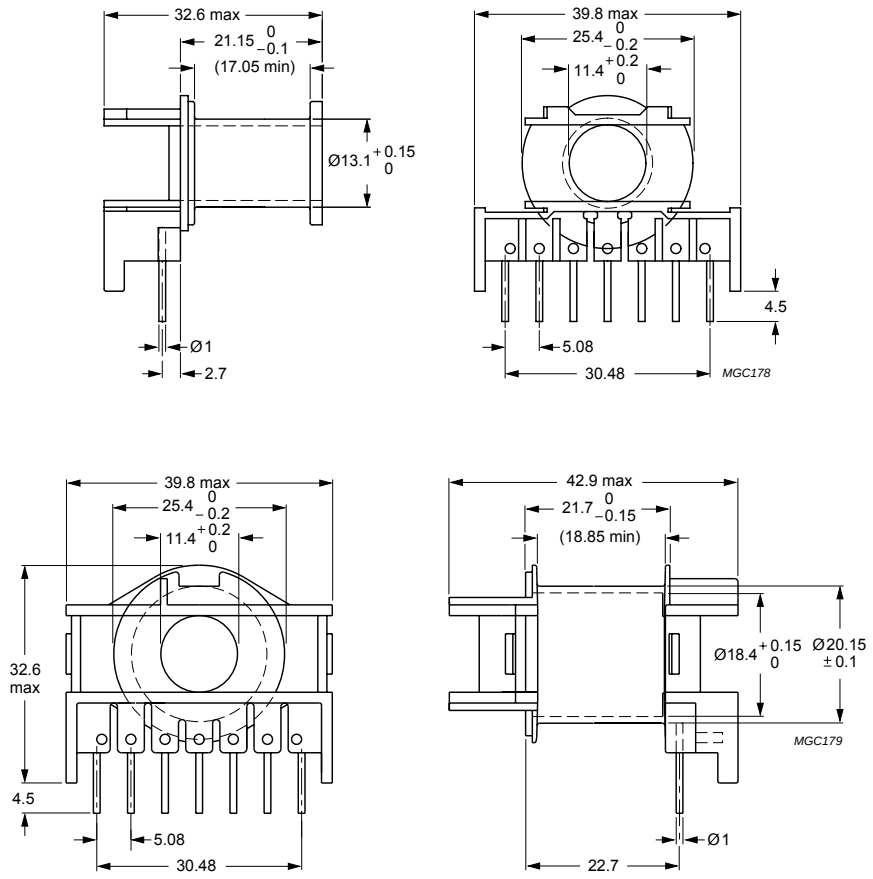

Dimensions in mm.
For mounting grid and method of fitting, see Fig.4.

Fig.3 Coaxial ETD34/17/11 coil former; 14-pins.

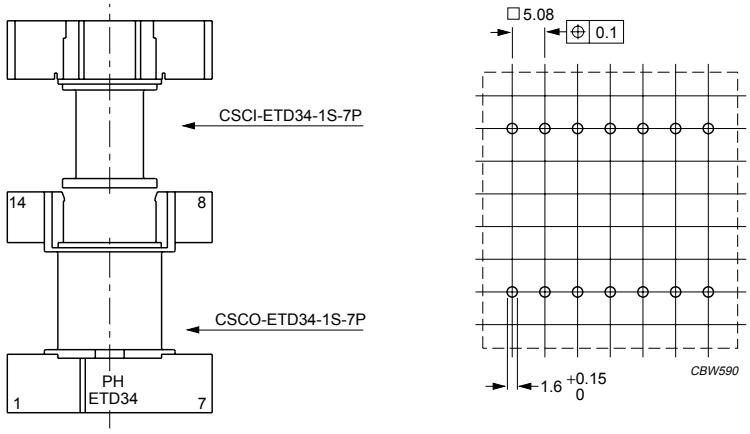

Dimensions in mm.

This coil former incorporates 8 mm creepage distance between primary and secondary windings, as well as between primary and all other conductive parts (in accordance with IEC 380 safety regulations).

Fig.4 Mounting grid and method of fitting.

Winding data and area product for coaxial ETD34/17/11 coil former

NUMBER OF SECTIONS	WINDING AREA (mm^2)	MINIMUM WINDING WIDTH (mm)	AVERAGE LENGTH OF TURN (mm)	AREA PRODUCT Ae x Aw (mm^4)	TYPE NUMBER
1	42.6	17.05	49.4	4140	CSCI-ETD34-1S-7P
1	46.6	18.85	71.4	4520	CSCO-ETD34-1S-7P

MOUNTING PARTS

General data

ITEM	REMARKS	FIGURE	TYPE NUMBER
Mounting clip	material: stainless steel	5	CLI-ETD34

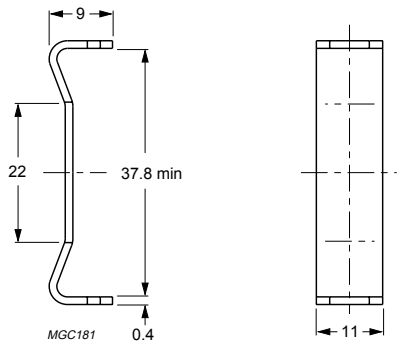

Dimensions in mm.

Fig.5 Mounting clip for ETD34/17/11.

CORE SETS

Effective core parameters

SYMBOL	PARAMETER	VALUE	UNIT
Σ(l/A)	core factor (C1)	0.737	mm^{-1}
V_e	effective volume	11500	mm^3
l_e	effective length	92.2	mm
A_e	effective area	125	mm^2
A_{min}	minimum area	123	mm^2
m	mass of core half	≈ 30	g

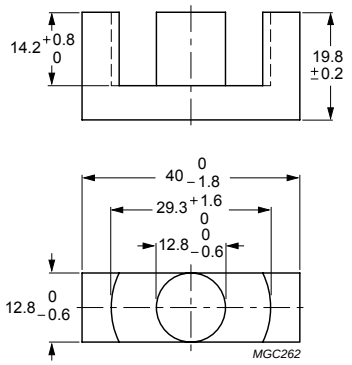

Dimensions in mm.

Fig.1 ETD39/20/13 core half.

Core halves

Clamping force for A_L measurements, 40 ±20 N. Gapped cores are available on request.

GRADE	A_L (nH)	μ_e	AIR GAP (μm)	TYPE NUMBER
3C90	3000 ±25%	≈ 1760	≈ 0	ETD39/20/13-3C90
3C94	3000 ±25%	≈ 1760	≈ 0	ETD39/20/13-3C94
3C95 des	3650 ±25%	≈ 2145	≈ 0	ETD39/20/13-3C95
3F3	2800 ±25%	≈ 1640	≈ 0	ETD39/20/13-3F3

Properties of core sets under power conditions

GRADE	B (mT) at	CORE LOSS (W) at				
	H = 250 A/m; f = 25 kHz; T = 100 °C	f = 25 kHz; $\hat{B}$ = 200 mT; T = 100 °C	f = 100 kHz; $\hat{B}$ = 100 mT; T = 100 °C	f = 100 kHz; $\hat{B}$ = 200 mT; T = 25 °C	f = 100 kHz; $\hat{B}$ = 200 mT; T = 100 °C	f = 400 kHz; $\hat{B}$ = 50 mT; T = 100 °C
3C90	≥330	≤ 1.4	≤ 1.5	–	–	–
3C94	≥330	–	≤ 1.2	–	≤ 6.0	–
3C95	≥330	–	–	≤ 7.25	≤ 6.9	–
3F3	≥320	–	≤ 1.4	–	–	≤ 2.5

COIL FORMER

General data 16-pins ETD39/20/13 coil former

PARAMETER	SPECIFICATION
Coil former material	polybutyleneterephtalate (PBT), glass-reinforced, flame retardant in accordance with *"UL 94V-0"*; UL file number E45329(R)
Pin material	copper-tin alloy (CuSn), tin (Sn) plated
Maximum operating temperature	155 °C, *"IEC 60085"*, class F
Resistance to soldering heat	*"IEC 60068-2-20"*, Part 2, Test Tb, method 1B, 350 °C, 3.5 s
Solderability	*"IEC 60068-2-20"*, Part 2, Test Ta, method 1

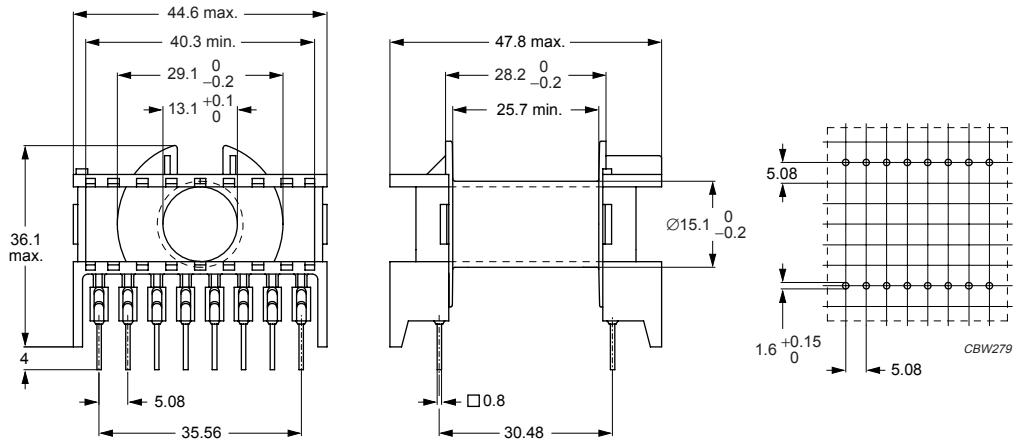

Dimensions in mm.

Fig.2 ETD39/20/13 coil former; 16-pins.

Winding data and area product for 16-pins ETD39/20/13 coil former

NUMBER OF SECTIONS	WINDING AREA (mm^2)	MINIMUM WINDING WIDTH (mm)	AVERAGE LENGTH OF TURN (mm)	AREA PRODUCT Ae x Aw (mm^4)	TYPE NUMBER
1	177	25.7	69	22100	CPH-ETD39-1S-16P[1]

Note

1. Also available with ∅1.0 mm pins.

MOUNTING PARTS

General data

ITEM	REMARKS	FIGURE	TYPE NUMBER
Mounting clip	material: stainless steel	3	CLI-ETD39

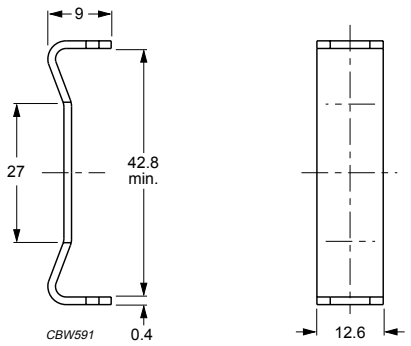

Dimensions in mm.

Fig.3 Mounting clip for ETD39/20/13.

CORE SETS

Effective core parameters

SYMBOL	PARAMETER	VALUE	UNIT
Σ(l/A)	core factor (C1)	0.589	mm^{-1}
V_e	effective volume	17800	mm^3
l_e	effective length	103	mm
A_e	effective area	173	mm^2
A_{min}	minimum area	172	mm^2
m	mass of core half	≈ 47	g

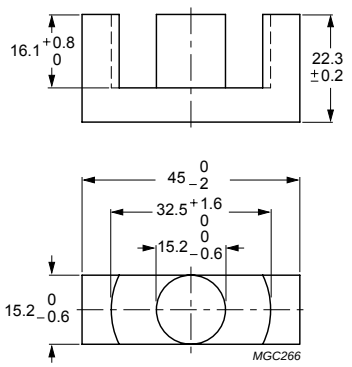

Dimensions in mm.

Fig.1 ETD44/22/15 core half.

Core halves

Clamping force for A_L measurements, 40 ±20 N. Gapped cores are available on request.

GRADE	A_L (nH)	μ_e	AIR GAP (μm)	TYPE NUMBER
3C90	3800 ±25%	≈ 1800	≈ 0	ETD44/22/15-3C90
3C94	3800 ±25%	≈ 1800	≈ 0	ETD44/22/15-3C94
3C95 des	4640 ±25%	≈ 2200	≈ 0	ETD44/22/15-3C95
3F3	3500 ±25%	≈ 1660	≈ 0	ETD44/22/15-3F3

Properties of core sets under power conditions

GRADE	B (mT) at	CORE LOSS (W) at				
	H = 250 A/m; f = 25 kHz; T = 100 °C	f = 25 kHz; $\hat{B}$ = 200 mT; T = 100 °C	f = 100 kHz; $\hat{B}$ = 100 mT; T = 100 °C	f = 100 kHz; $\hat{B}$ = 200 mT; T = 25 °C	f = 100 kHz; $\hat{B}$ = 200 mT; T = 100 °C	f = 400 kHz; $\hat{B}$ = 50 mT; T = 100 °C
3C90	≥330	≤ 2.2	≤ 2.3	–	–	–
3C94	≥330	–	≤ 1.7	–	≤ 9.4	–
3C95	≥330	–	–	≤ 11.2	≤ 10.7	–
3F3	≥320	–	≤ 2.2	–	–	≤ 3.9

COIL FORMERS

General data 18-pins ETD44/22/15 coil former

PARAMETER	SPECIFICATION
Coil former material	polybutyleneterephtalate (PBT), glass-reinforced, flame retardant in accordance with *"UL 94V-0"*; UL file number E45329(R)
Pin material	copper-tin alloy (CuSn), tin (Sn) plated
Maximum operating temperature	155 °C, *"IEC 60085"*, class F
Resistance to soldering heat	*"IEC 60068-2-20"*, Part 2, Test Tb, method 1B, 350 °C, 3.5 s
Solderability	*"IEC 60068-2-20"*, Part 2, Test Ta, method 1

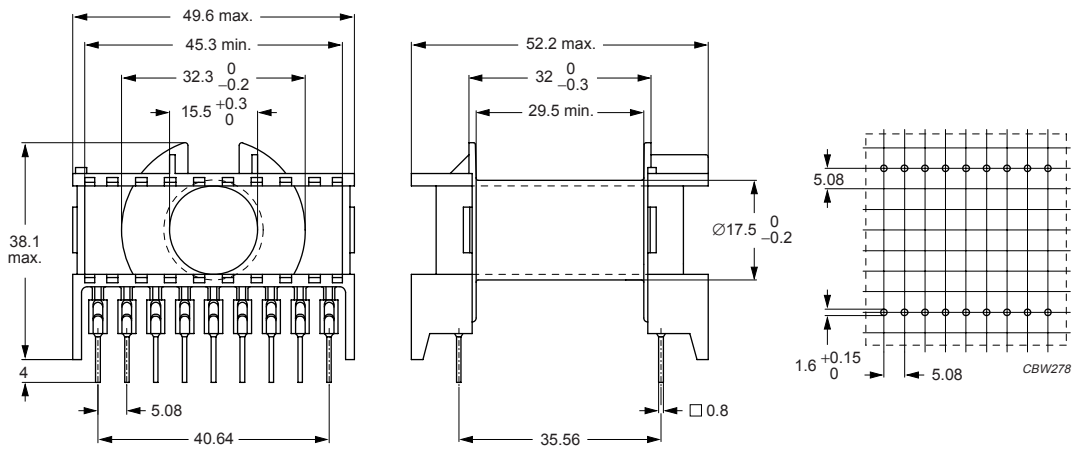

Dimensions in mm.

Fig.2 ETD44/22/15 coil former; 18-pins.

Winding data and area product for 18-pins ETD44/22/15 coil former

NUMBER OF SECTIONS	WINDING AREA (mm^2)	MINIMUM WINDING WIDTH (mm)	AVERAGE LENGTH OF TURN (mm)	AREA PRODUCT Ae x Aw (mm^4)	TYPE NUMBER
1	214	29.5	77	37000	CPH-ETD44-1S-18P[1]

Note

1. Also available with ∅1.0 mm pins.

MOUNTING PARTS

General data

ITEM	REMARKS	FIGURE	TYPE NUMBER
Mounting clip	material: stainless steel	3	CLI-ETD44

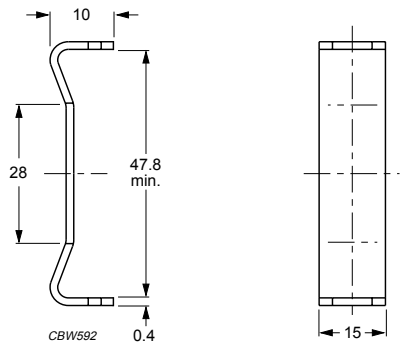

Dimensions in mm.

Fig.3 Mounting clip for ETD44/22/15.

CORE SETS

Effective core parameters

SYMBOL	PARAMETER	VALUE	UNIT
Σ(l/A)	core factor (C1)	0.534	mm^{-1}
V_e	effective volume	24000	mm^3
l_e	effective length	114	mm
A_e	effective area	211	mm^2
A_{min}	minimum area	209	mm^2
m	mass of core half	≈ 62	g

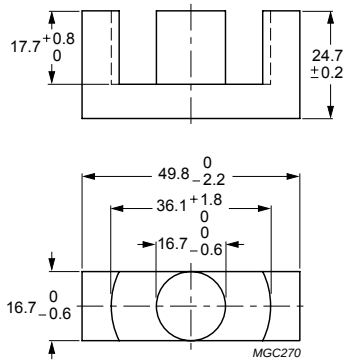

Dimensions in mm.

Fig.1 ETD49/25/16 core half.

Core halves

Clamping force for A_L measurements, 50 ±20 N. Gapped cores are available on request.

GRADE	A_L (nH)	μ_e	AIR GAP (μm)	TYPE NUMBER
3C90	4200 ±25%	≈ 1810	≈ 0	ETD49/25/16-3C90
3C94	4200 ±25%	≈ 1810	≈ 0	ETD49/25/16-3C94
3C95 des	5140 ±25%	≈ 2210	≈ 0	ETD49/25/16-3C95
3F3	3900 ±25%	≈ 1680	≈ 0	ETD49/25/16-3F3

Properties of core sets under power conditions

GRADE	B (mT) at	CORE LOSS (W) at				
	H = 250 A/m; f = 25 kHz; T = 100 °C	f = 25 kHz; $\hat{B}$ = 200 mT; T = 100 °C	f = 100 kHz; $\hat{B}$ = 100 mT; T = 100 °C	f = 100 kHz; $\hat{B}$ = 200 mT; T = 25 °C	f = 100 kHz; $\hat{B}$ = 200 mT; T = 100 °C	f = 400 kHz; $\hat{B}$ = 50 mT; T = 100 °C
3C90	≥330	≤ 2.9	≤ 3.1	–	–	–
3C94	≥330	–	≤ 2.3	–	≤ 12.4	–
3C95	≥330	–	–	≤ 15.1	≤ 14.4	–
3F3	≥320	–	≤ 3.0	–	–	≤ 5.4

COIL FORMERS

General data 20-pins ETD49/25/16 coil former

PARAMETER	SPECIFICATION
Coil former material	polybutyleneterephtalate (PBT), glass-reinforced, flame retardant in accordance with *"UL 94V-0"*; UL file number E45329(R)
Pin material	copper-tin alloy (CuSn), tin (Sn) plated
Maximum operating temperature	155 °C, *"IEC 60085"*, class F
Resistance to soldering heat	*"IEC 60068-2-20"*, Part 2, Test Tb, method 1B, 350 °C, 3.5 s
Solderability	*"IEC 60068-2-20"*, Part 2, Test Ta, method 1

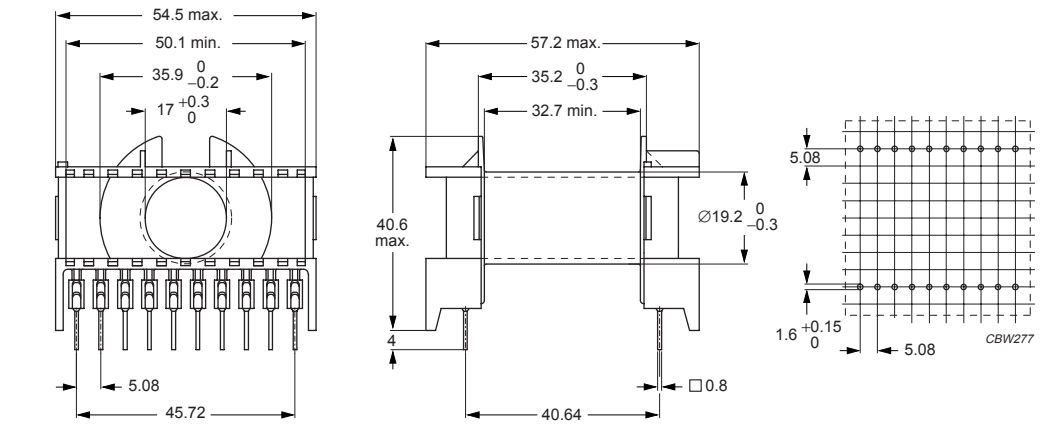

Dimensions in mm.

Fig.2 ETD49/25/16 coil former; 20-pins.

Winding data and area product for 20-pins ETD49/25/16 coil former

NUMBER OF SECTIONS	WINDING AREA (mm^2)	MINIMUM WINDING WIDTH (mm)	AVERAGE LENGTH OF TURN (mm)	AREA PRODUCT Ae x Aw (mm^4)	TYPE NUMBER
1	273	32.7	85	57600	CPH-ETD49-1S-20P[1]

Note

1. Also available with ∅1.0 mm pins.

MOUNTING PARTS

General data

ITEM	REMARKS	FIGURE	TYPE NUMBER
Mounting clip	material: stainless steel	3	CLI-ETD49

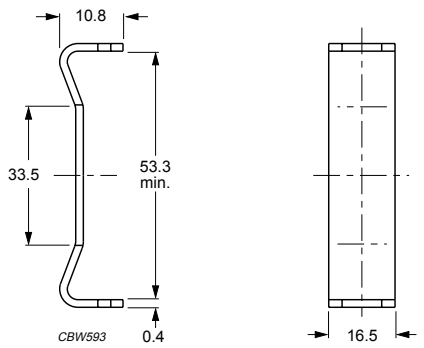

Dimensions in mm.

Fig.3 Mounting clip for ETD49/25/16.

CORE SETS

Effective core parameters

SYMBOL	PARAMETER	VALUE	UNIT
$\Sigma(l/A)$	core factor (C1)	0.454	mm^{-1}
V_e	effective volume	35500	mm^3
l_e	effective length	127	mm
A_e	effective area	280	mm^2
A_{min}	minimum area	270	mm^2
m	mass of core half	≈ 90	g

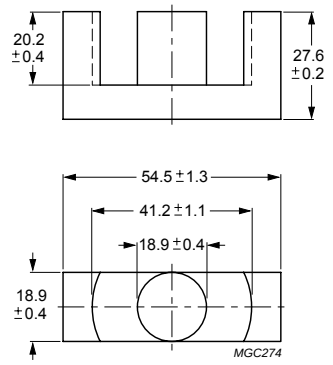

Dimensions in mm.

Fig.1 ETD54/28/19 core half.

Core halves

Clamping force for A_L measurements, 50 ±20 N. Gapped cores are available on request.

GRADE	A_L (nH)	μ_e	AIR GAP (μm)	TYPE NUMBER
3C90	5000 ±25%	≈ 1810	≈ 0	ETD54/28/19-3C90
3C94	5000 ±25%	≈ 1810	≈ 0	ETD54/28/19-3C94
3C95 des	6120 ±25%	≈ 2210	≈ 0	ETD54/28/19-3C95
3F3	4600 ±25%	≈ 1660	≈ 0	ETD54/28/19-3F3

Properties of core sets under power conditions

GRADE	B (mT) at	CORE LOSS (W) at				
	H = 250 A/m; f = 25 kHz; T = 100 °C	f = 25 kHz; $\hat{B}$ = 200 mT; T = 100 °C	f = 100 kHz; $\hat{B}$ = 100 mT; T = 100 °C	f = 100 kHz; $\hat{B}$ = 200 mT; T = 25 °C	f = 100 kHz; $\hat{B}$ = 200 mT; T = 100 °C	f = 400 kHz; $\hat{B}$ = 50 mT; T = 100 °C
3C90	≥330	≤ 4.3	≤ 4.8	–	–	–
3C94	≥330	–	≤ 3.6	–	≤ 21	–
3C95	≥330	–	–	≤ 22.4	≤ 21.3	–
3F3	≥320	–	≤ 4.5	–	–	≤ 8.5

COIL FORMERS

General data 22-pins ETD54/28/19 coil former

ITEM	SPECIFICATION
Coil former material	polybutyleneterephtalate (PBT), glass-reinforced, flame retardant in accordance with UL 94V-0; UL file number E45329(M)
Pin material	copper-tin alloy (CuSn), tin (Sn) plated
Maximum operating temperature	155 °C, *"IEC 60085"*, class F
Resistance to soldering heat	*"IEC 60068-2-20"*, Part 2, Test Tb, method 1B, 350 °C, 3.5 s
Solderability	*"IEC 60068-2-20"*, Part 2, Test Ta, method 1

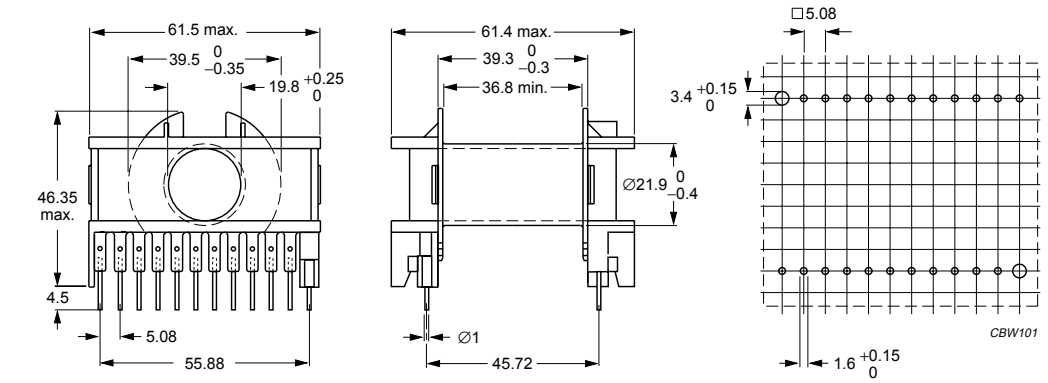

Dimensions in mm.

Fig.2 ETD54/28/19 coil former; 22-pins.

Winding data and area product for 22-pins ETD54/28/19 coil former

NUMBER OF SECTIONS	WINDING AREA (mm^2)	MINIMUM WINDING WIDTH (mm)	AVERAGE LENGTH OF TURN (mm)	AREA PRODUCT Ae x Aw (mm^4)	TYPE NUMBER
1	316	36.8	96	88500	CPH-ETD54-1S-22P

MOUNTING PARTS

General data

ITEM	REMARKS	FIGURE	TYPE NUMBER
Mounting clip	material: stainless steel	3	CLI-ETD54

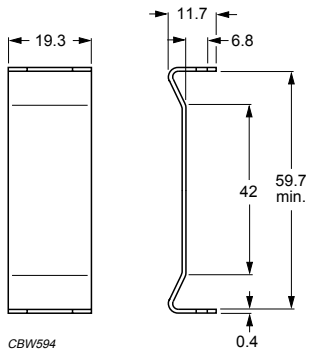

Dimensions in mm.

Fig.3 Mounting clip for ETD54/28/19.

CORE SETS

Effective core parameters

SYMBOL	PARAMETER	VALUE	UNIT
$\Sigma(l/A)$	core factor (C1)	0.378	mm^{-1}
V_e	effective volume	51500	mm^3
l_e	effective length	139	mm
A_e	effective area	368	mm^2
A_{min}	minimum area	360	mm^2
m	mass of core half	≈130	g

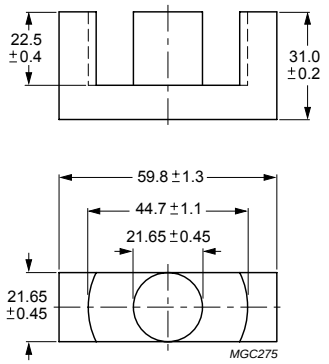

Dimensions in mm.

Fig.1 ETD59/31/22 core half.

Core halves

Clamping force for A_L measurements, 70 ±20 N. Gapped cores are available on request.

GRADE	A_L (nH)	μ_e	AIR GAP (μm)	TYPE NUMBER
3C90	6000 ±25%	≈ 1800	≈ 0	ETD59/31/22-3C90
3C94	6000 ±25%	≈ 1800	≈ 0	ETD59/31/22-3C94
3C95 des	7340 ±25%	≈ 2205	≈ 0	ETD59/31/22-3C95
3F3	5600 ±25%	≈ 1680	≈ 0	ETD59/31/22-3F3

Properties of core sets under power conditions

GRADE	B (mT) at	CORE LOSS (W) at				
	H = 250 A/m; f = 25 kHz; T = 100 °C	f = 25 kHz; $\hat{B}$ = 200 mT; T = 100 °C	f = 100 kHz; $\hat{B}$ = 100 mT; T = 100 °C	f = 100 kHz; $\hat{B}$ = 200 mT; T = 25 °C	f = 100 kHz; $\hat{B}$ = 200 mT; T = 100 °C	f = 400 kHz; $\hat{B}$ = 50 mT; T = 100 °C
3C90	≥330	≤ 6.2	≤ 7.3	–	–	–
3C94	≥330	–	≤ 5.2	–	≤ 31	–
3C95	≥330	–	–	≤ 32.4	≤ 30.9	–
3F3	≥320	–	≤ 6.7	–	–	≤ 12.8

COIL FORMER

General data 24-pins ETD59/31/22 coil former

PARAMETER	SPECIFICATION
Coil former material	polybutyleneterephtalate (PBT), glass-reinforced, flame retardant in accordance with *"UL 94V-0"*; UL file number E45329(M)
Pin material	copper-tin alloy (CuSn), tin (Sn) plated
Maximum operating temperature	155 °C, *"IEC 60085"*, class F
Resistance to soldering heat	*"IEC 60068-2-20"*, Part 2, Test Tb, method 1B, 350 °C, 3.5 s
Solderability	*"IEC 60068-2-20"*, Part 2, Test Ta, method 1

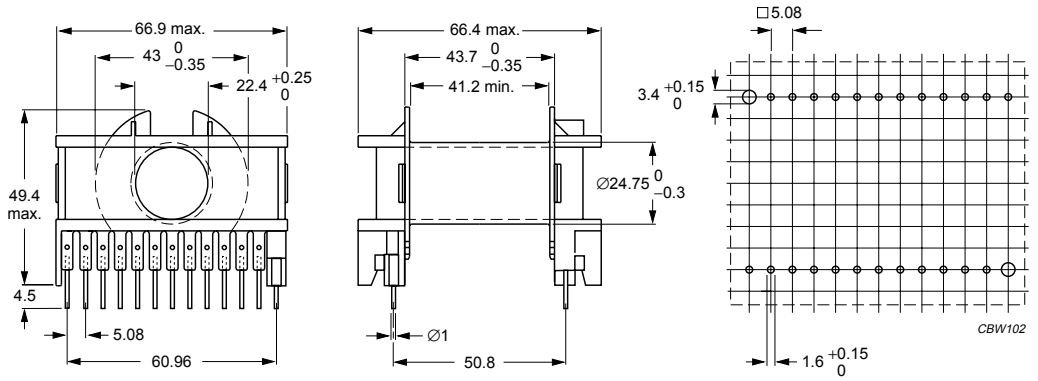

Dimensions in mm.

Fig.2 ETD59/31/22 coil former; 24-pins.

Winding data and area product for 24-pins ETD59/31/22 coil former

NUMBER OF SECTIONS	WINDING AREA (mm^2)	MINIMUM WINDING WIDTH (mm)	AVERAGE LENGTH OF TURN (mm)	AREA PRODUCT Ae x Aw (mm^4)	TYPE NUMBER
1	366	41.2	106	135000	CPH-ETD59-1S-24P

MOUNTING PARTS

General data

ITEM	REMARKS	FIGURE	TYPE NUMBER
Mounting clip	material: stainless steel	3	CLI-ETD59

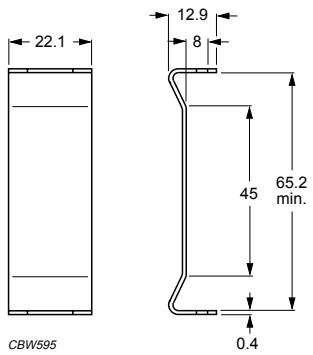

Dimensions in mm.

Fig.3 Mounting clip for ETD59/31/22.

Soft Ferrites

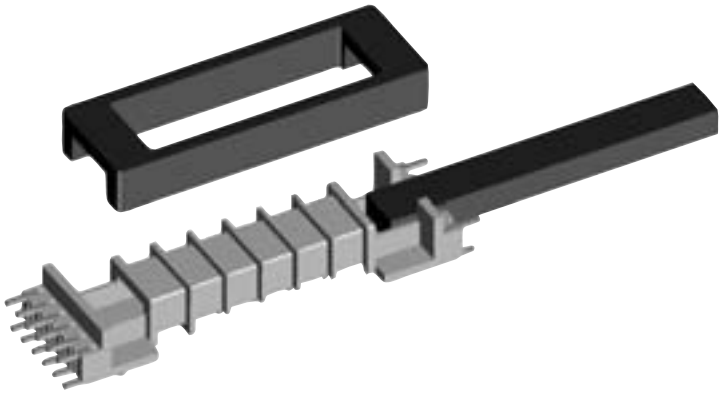

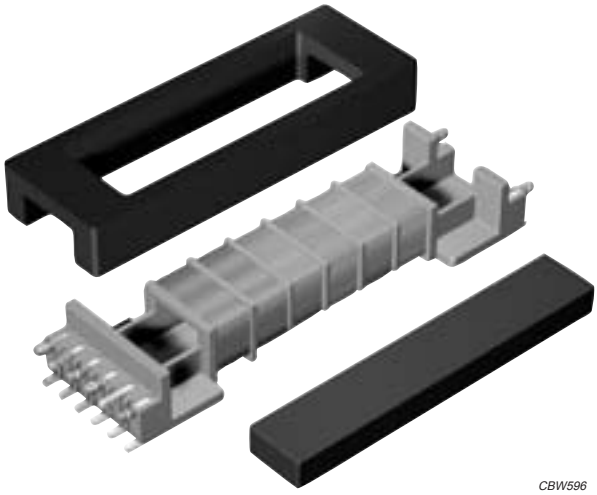
CBW596

PRODUCT OVERVIEW AND TYPE NUMBER STRUCTURE

Product overview Frame and Bar cores

CORE TYPE	V_e (mm^3)	A_e (mm^2)	MASS (g)
FRM 20/5/15	655	14	2.1
BAR 20/3/5.5	655	14	1.5
FRM 21/4/12	312	7.9	1.5
BAR 22/2/6	312	7.9	1.0
FRM 24/3.9/10	370	8.1	1.3
BAR 25/2.2/4	370	8.1	1.2
FRM 27/3.8/9	504	9.7	1.6
BAR 28/3.8/2.3	504	9.7	1.2

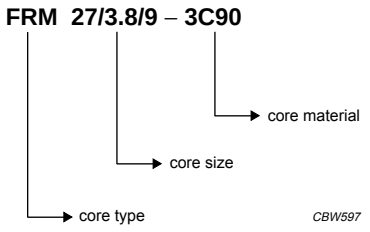

Fig.1 Type number structure for frames.

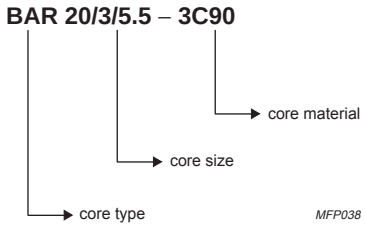

Fig.2 Type number structure for bars.

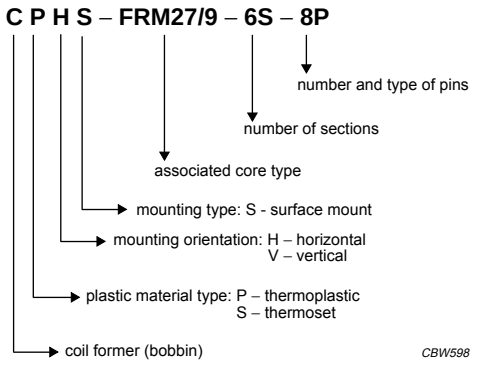

Fig.3 Type number structure for coil formers.

CORE SETS

Effective core parameters

SYMBOL	PARAMETER	VALUE	UNIT
$\Sigma(l/A)$	core factor (C1)	3.29	mm^{-1}
V_e	effective volume	655	mm^3
l_e	effective length	46	mm
A_e	effective area	14	mm^2
A_{min}	minimum area	7.4	mm^2
m	mass of frame	≈ 2.1	g
m	mass of bar	≈ 1.5	g

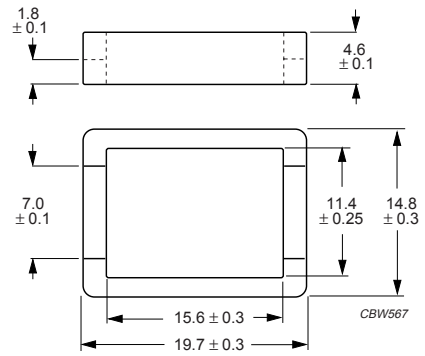

Dimensions in mm.

Fig.1 FRM20/5/15.

Ordering information for bar cores

GRADE	TYPE NUMBER
3C90	BAR20/3/5.5-3C90
3C91	BAR20/3/5.5-3C91

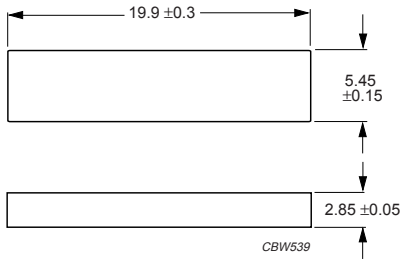

Dimensions in mm.

Fig.2 BAR20/3/5.5.

Frame cores for use in combination with matching bar cores

A_L measured in combination with bar core

GRADE	A_L (nH)	μ_e	AIR GAP (μm)	TYPE NUMBER
3C90	500 ±25%	≈ 1310	≈ 0	FRM20/5/15-3C90
3C91	600 ±25%	≈ 1570	≈ 0	FRM20/5/15-3C91

Properties of Frame and Bar combinations under power conditions

GRADE	B (mT) at	CORE LOSS (W) at			
	H = 250 A/m; f = 10 kHz; T = 100 °C	f = 25 kHz; $\hat{B}$ = 200 mT; T = 100 °C	f = 100 kHz; $\hat{B}$ = 100 mT; T = 100 °C	f = 100 kHz; $\hat{B}$ = 100 mT; T = 60 °C	f = 100 kHz; $\hat{B}$ = 200 mT; T = 60 °C
3C90	≥ 320	≤ 0.073	≤ 0.080	–	–
3C91	≥ 320	–	–	≤ 0.033	≤ 0.26

COIL FORMERS

General data

PARAMETER	SPECIFICATION
Coil former material	liquid crystal polymer (LCP), glass-reinforced, flame retardant in accordance with *"UL 94V-0"*; UL file number E54705(M)
Pin material	copper-tin alloy (CuSn), tin (Sn) plated
Maximum operating temperature	155 °C, *"IEC 60085"*, class F
Resistance to soldering heat	*"IEC 60068-2-20"*, Part 2, Test Tb, method 1B, 350 °C, 3.5 s
Solderability	*"IEC 60068-2-20"*, Part 2, Test Ta, method 1: 235 °C, 2 s

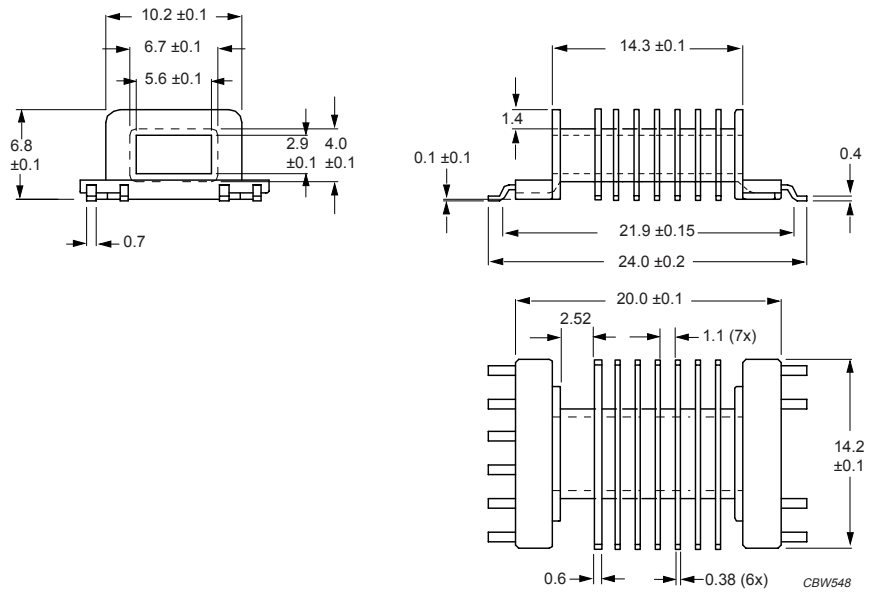

Dimensions in mm.

Fig.3 SMD coil former for FRM20/5/15.

Winding data and area product

NUMBER OF SECTIONS	NUMBER OF SOLDER PADS	WINDING AREA (mm^2)	WINDING WIDTH (mm)	AVERAGE LENGTH OF TURN (mm)	AREA PRODUCT Ae x Aw (mm^4)	TYPE NUMBER
8	10	3.5 + 7 × 1.5	2.52 + 7 × 1.1	27	25.9 + 7 x 11.1	CPHS-FRM20/15-8S-10P

MOUNTING PARTS

General data

PARAMETER	SPECIFICATION
Cover material	liquid crystal polymer (LCP), glass-reinforced, flame retardant in accordance with *"UL 94V-0"*; UL file number E54705(M)
Maximum operating temperature	155 °C, *"IEC 60085"*, class F

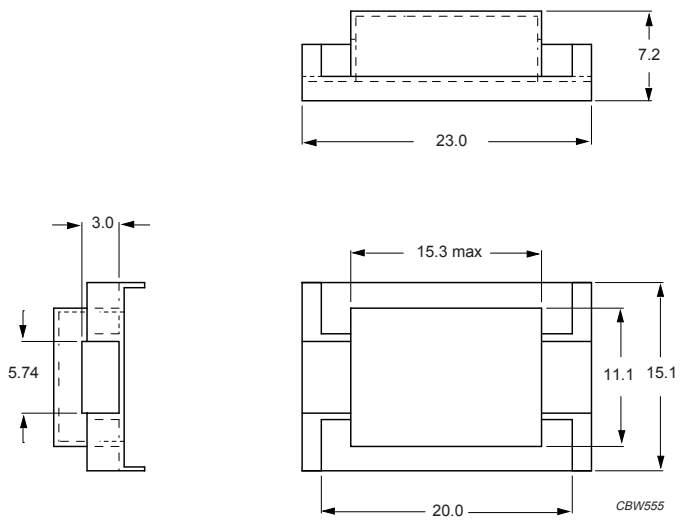

Dimensions in mm.

Fig.4 Cover for FRM20/5/15.

CORE SETS

Effective core parameters

SYMBOL	PARAMETER	VALUE	UNIT
$\Sigma(l/A)$	core factor (C1)	5.06	mm^{-1}
V_e	effective volume	312	mm^3
l_e	effective length	40	mm
A_e	effective area	7.9	mm^2
A_{min}	minimum area	5.7	mm^2
m	mass of frame	≈ 1.5	g
m	mass of bar	≈ 1.0	g

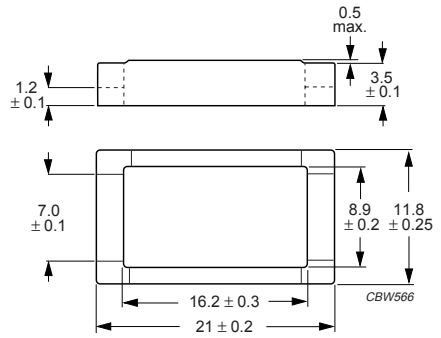

Dimensions in mm.

Fig.1 FRM21/4/12.

Ordering information for bar cores

GRADE	TYPE NUMBER
3C90	BAR22/2/6-3C90
3C91	BAR22/2/6-3C91

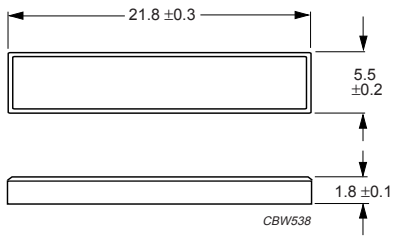

Dimensions in mm.

Fig.2 BAR22/2/6.

Frame cores for use in combination with matching bar cores

A_L measured in combination with bar core.

GRADE	A_L (nH)	μ_e	AIR GAP (μm)	TYPE NUMBER
3C90	400 ±25%	≈ 1610	≈ 0	FRM21/4/12-3C90
3C91	470 ±25%	≈ 1890	≈ 0	FRM21/4/12-3C91

Properties of Frame and Bar combinations under power conditions

GRADE	B (mT) at	CORE LOSS (W) at			
	H = 250 A/m; f = 10 kHz; T = 100 °C	f = 25 kHz; $\hat{B}$ = 200 mT; T = 100 °C	f = 100 kHz; $\hat{B}$ = 100 mT; T = 100 °C	f = 100 kHz; $\hat{B}$ = 100 mT; T = 60 °C	f = 100 kHz; $\hat{B}$ = 200 mT; T = 60 °C
3C90	≥320	≤ 0.034	≤ 0.037	–	–
3C91	≥320	–	–	≤ 0.020	≤ 0.14

COIL FORMERS

General data

PARAMETER	SPECIFICATION
Coil former material	liquid crystal polymer (LCP), glass-reinforced, flame retardant in accordance with *"UL 94V-0"*; UL file number E54705(M)
Pin material	copper-tin alloy (CuSn), tin (Sn) plated
Maximum operating temperature	155 °C, *"IEC 60085"*, class F
Resistance to soldering heat	*"IEC 60068-2-20"*, Part 2, Test Tb, method 1B, 350 °C, 3.5 s
Solderability	*"IEC 60068-2-20"*, Part 2, Test Ta, method 1: 235 °C, 2 s

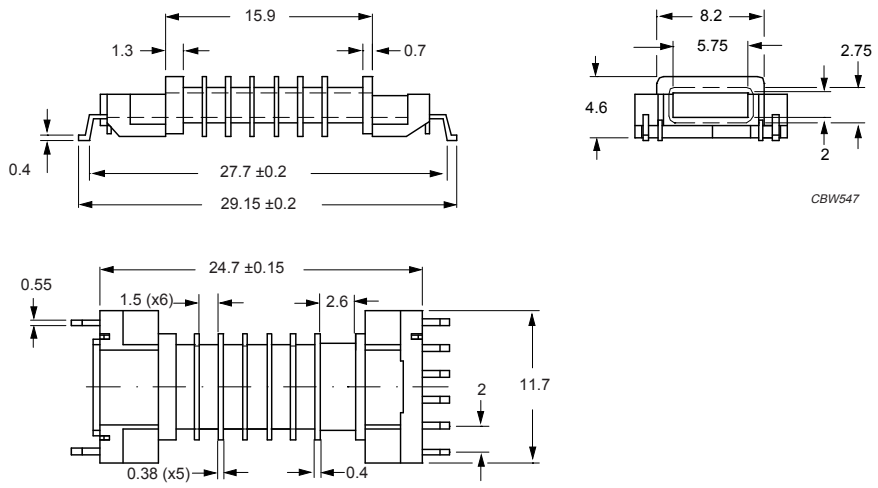

Dimensions in mm.

Fig.3 SMD coil former for FRM21/4/12.

Winding data and area product

NUMBER OF SECTIONS	NUMBER OF SOLDER PADS	WINDING AREA (mm^2)	WINDING WIDTH (mm)	AVERAGE LENGTH OF TURN (mm)	AREA PRODUCT Ae x Aw (mm^4)	TYPE NUMBER
7	8	2.3 + 6 × 1.35	2.6 + 6 × 1.5	21	18.2 + 6 x 10.7	CPHS-FRM21/12-7S-8P

CORE SETS

Effective core parameters

SYMBOL	PARAMETER	VALUE	UNIT
$\Sigma(l/A)$	core factor (C1)	5.65	mm^{-1}
V_e	effective volume	370	mm^3
l_e	effective length	45.8	mm
A_e	effective area	8.1	mm^2
A_{min}	minimum area	6.0	mm^2
m	mass of frame	≈ 1.3	g
m	mass of bar	≈ 1.2	g

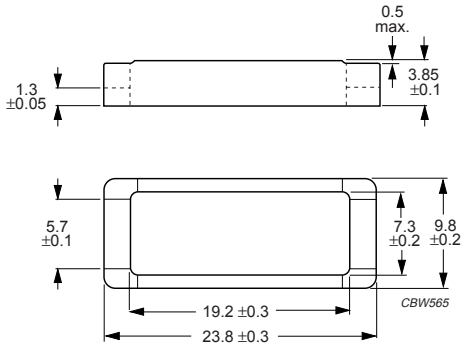

Dimensions in mm.

Fig.1 FRM24/3.9/10 core.

Ordering information for bar cores

GRADE	TYPE NUMBER
3C90	BAR25/2.2/4-3C90
3C91	BAR25/2.2/4-3C91

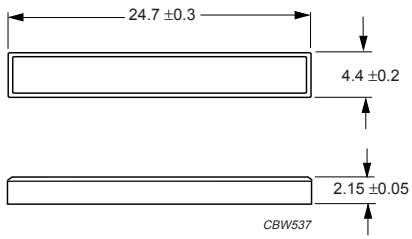

Dimensions in mm.

Fig.2 BAR25/2.2/4.

Frame cores for use in combination with matching bar cores

AL measured in combination with bar core.

GRADE	A_L (nH)	μ_e	AIR GAP (μm)	TYPE NUMBER
3C90	370 ±25%	≈ 1660	≈ 0	FRM24/3.9/10-3C90
3C91	440 ±25%	≈ 1970	≈ 0	FRM24/3.9/10-3C91

Properties of Frame and Bar combinations under power conditions

GRADE	B (mT) at	CORE LOSS (W) at			
	H = 250 A/m; f = 10 kHz; T = 100 °C	f = 25 kHz; $\hat{B}$ = 200 mT; T = 100 °C	f = 100 kHz; $\hat{B}$ = 100 mT; T = 100 °C	f = 100 kHz; $\hat{B}$ = 100 mT; T = 60 °C	f = 100 kHz; $\hat{B}$ = 200 mT; T = 60 °C
3C90	≥320	≤ 0.041	≤ 0.044	–	–
3C91	≥320	–	–	≤ 0.019	≤ 0.15

COIL FORMERS

General data

PARAMETER	SPECIFICATION
Coil former material	liquid crystal polymer (LCP), glass-reinforced, flame retardant in accordance with *"UL 94V-0"*; UL file number E54705(M)
Pin material	copper-tin alloy (CuSn), tin (Sn) plated
Maximum operating temperature	155 °C, *"IEC 60085"*, class F
Resistance to soldering heat	*"IEC 60068-2-20"*, Part 2, Test Tb, method 1B, 350 °C, 3.5 s
Solderability	*"IEC 60068-2-20"*, Part 2, Test Ta, method 1: 235 °C, 2 s

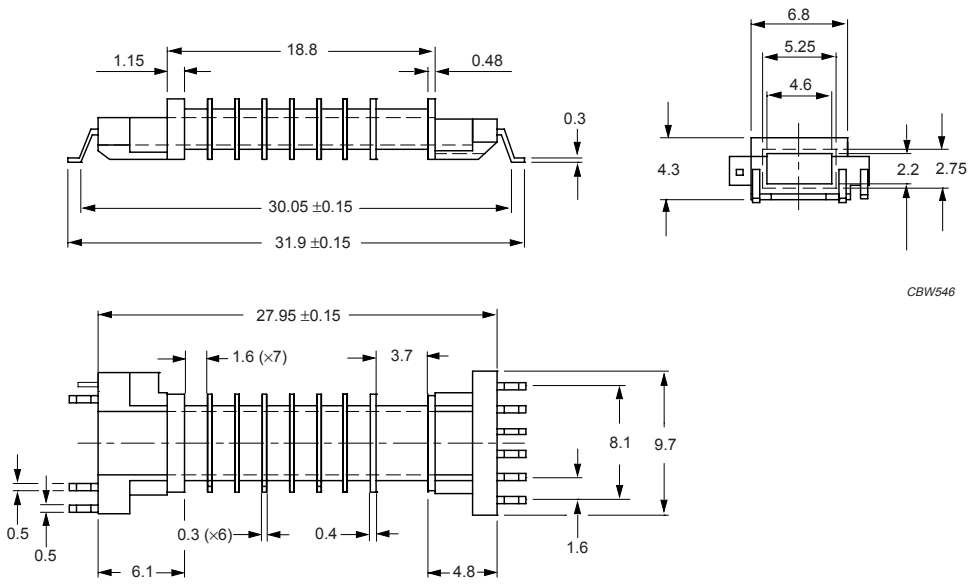

Dimensions in mm.

Fig.3 SMD coil former for FRM24/3.9/10.

Winding data and area product

NUMBER OF SECTIONS	NUMBER OF SOLDER PADS	WINDING AREA (mm^2)	WINDING WIDTH (mm)	AVERAGE LENGTH OF TURN (mm)	AREA PRODUCT Ae x Aw (mm^4)	TYPE NUMBER
8	9	2.9 + 7 × 1.24	3.7 + 7 × 1.6	17.3	23.5 + 7 x 10.0	CPHS-FRM24/10-8S-9P

CORE SETS

Effective core parameters

SYMBOL	PARAMETER	VALUE	UNIT
$\Sigma(l/A)$	core factor (C1)	5.56	mm^{-1}
V_e	effective volume	504	mm^3
l_e	effective length	52.1	mm
A_e	effective area	9.7	mm^2
A_{min}	minimum area	8.7	mm^2
m	mass of frame	≈ 1.6	g
m	mass of bar	≈ 1.2	g

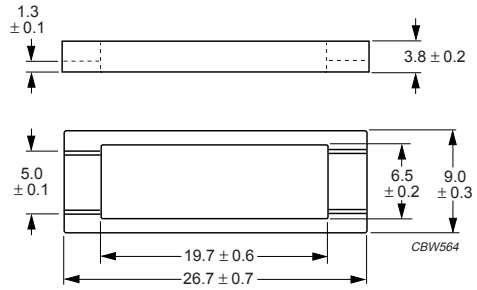

Dimensions in mm.

Fig.1 FRM27/3.8/9 core.

Ordering information for bar cores

GRADE	TYPE NUMBER
3C90	BAR28/2.3/3.8-3C90
3C91	BAR28/2.3/3.8-3C91

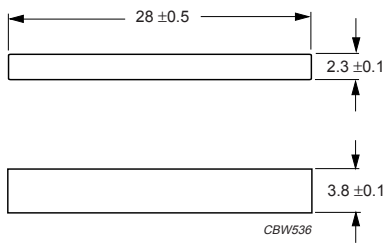

Dimensions in mm.

Fig.2 BAR28/2.3/3.8

Frame cores for use in combination with matching bar cores

A_L measured in combination with a bar core.

GRADE	A_L (nH)	μ_e	AIR GAP (μm)	TYPE NUMBER
3C90	350 ±20%	≈ 1550	≈ 0	FRM27/3.8/9-3C90
3C91	420 ±20%	≈ 1860	≈ 0	FRM27/3.8/9-3C91

Properties of Frame and Bar combinations under power conditions

GRADE	B (mT) at	CORE LOSS (W) at			
	H = 250 A/m; f = 10 kHz; T = 100 °C	f = 25 kHz; $\hat{B}$ = 200 mT; T = 100 °C	f = 100 kHz; $\hat{B}$ = 100 mT; T = 100 °C	f = 100 kHz; $\hat{B}$ = 100 mT; T = 60 °C	f = 100 kHz; $\hat{B}$ = 200 mT; T = 60 °C
3C90	≥320	≤ 0.056	≤ 0.060	–	–
3C91	≥320	–	–	≤ 0.025	≤ 0.2

COIL FORMERS

General data

PARAMETER	SPECIFICATION
Coil former material	liquid crystal polymer (LCP), glass-reinforced, flame retardant in accordance with *"UL 94V-0"*; UL file number E54705(M)
Pin material	copper-tin alloy (CuSn), tin (Sn) plated
Maximum operating temperature	155 °C, *"IEC 60085"*, class F
Resistance to soldering heat	*"IEC 60068-2-20"*, Part 2, Test Tb, method 1B, 350 °C, 3.5 s
Solderability	*"IEC 60068-2-20"*, Part 2, Test Ta, method 1: 235 °C, 2 s

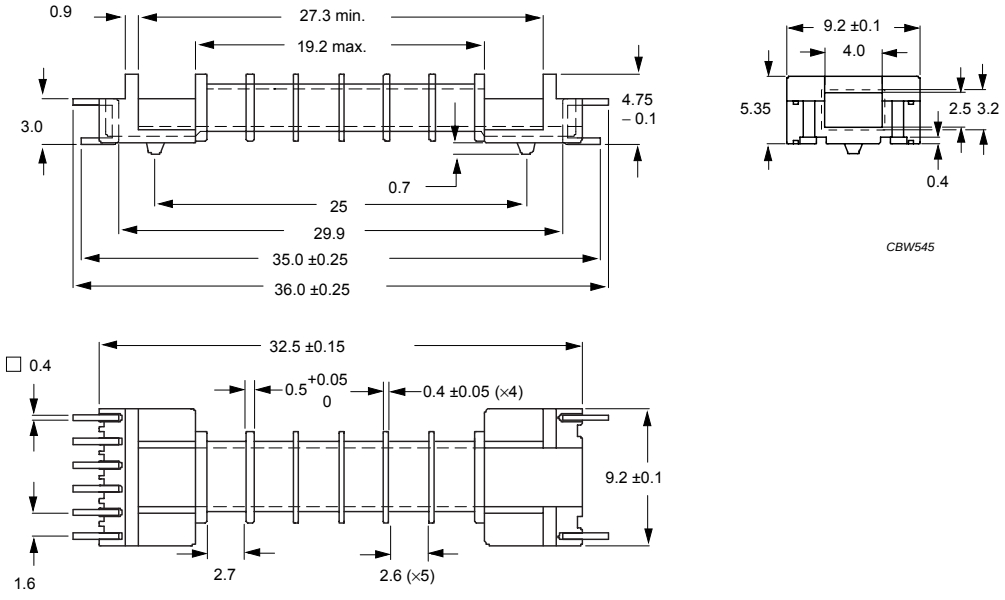

Dimensions in mm.

Fig.3 SMD coil former for FRM27/3.8/9.

Winding data and area product

NUMBER OF SECTIONS	NUMBER OF SOLDER PADS	WINDING AREA (mm^2)	WINDING WIDTH (mm)	AVERAGE LENGTH OF TURN (mm)	AREA PRODUCT Ae x Aw (mm^4)	TYPE NUMBER
6	8	1.75 + 5 × 1.7	2.7 + 5 × 2.6	18.5	17.0 + 5 x 16.5	CPHS-FRM27/9-6S-8P

Soft Ferrites

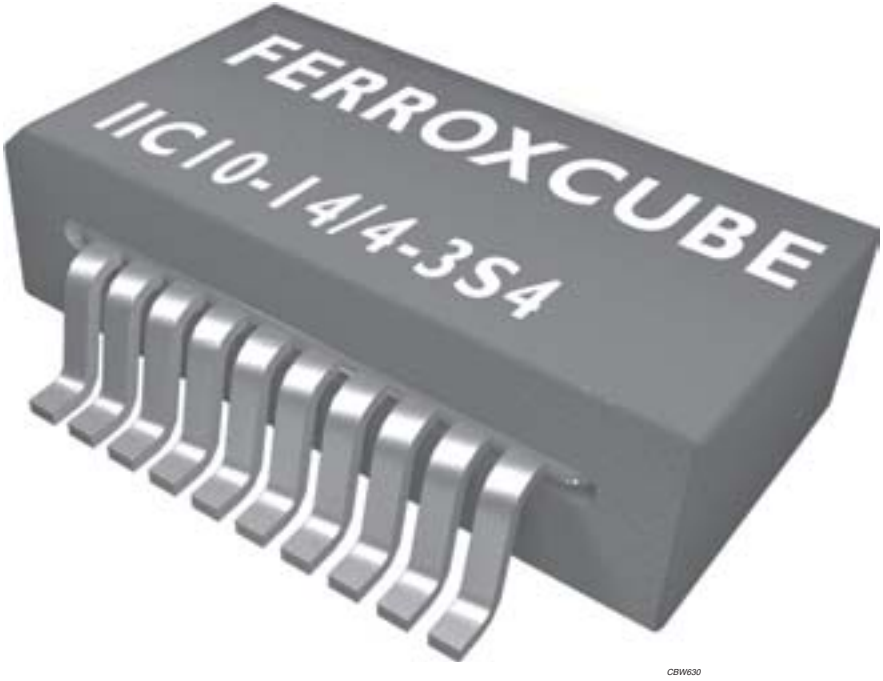
FERROXCUBE
IIC/0-I4/4-3S4
CBW630

PRODUCT OVERVIEW AND TYPE NUMBER STRUCTURE

Product overview IIC

CORE TYPE	V_e (mm^3)	A_e (mm^2)	MASS (g)
IIC2P-14/4	33.8	11.7	≈ 1.85
IIC10-14/4	33.8	11.7	≈ 1.85
IIC10P-14/4	33.8	11.7	≈ 1.85
IIC10G-14/4	33.8	11.7	≈ 1.85

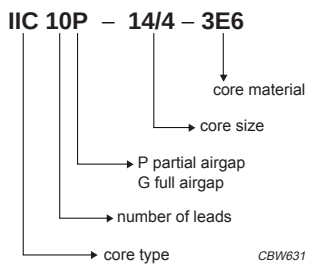

Fig.1 Type number structure.

IIC2P-14/4

Effective core parameters

SYMBOL	PARAMETER	VALUE	UNIT
Σ(l/A)	core factor (C1)	2.47	mm^{-1}
V_e	effective volume	338	mm^3
l_e	effective length	28.9	mm
A_e	effective area	11.7	mm^2
m	mass of core	≈1.85	g

FEATURES

- Inductive SMD component that looks like a standard IC.
- Windings are completed by PCB tracks.
- Suitable for reflow soldering.
- Partial air gap to resist saturation.

APPLICATIONS

- Coupled inductor (1)

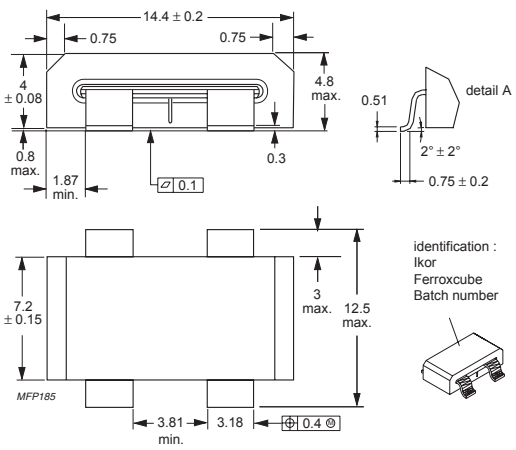

Dimensions in mm.

Fig.1 IIC2P-14/4 outline.

IICs with partial air gap for use as power inductors

GRADE	L (μH) FOR 2 TURNS NO BIAS CURRENT			TYPE NUMBER
	f = 100 kHz; T = 25 °C	f = 500 kHz; T = 25 °C	f = 1 MHz; T = 25 °C	
3F35 des	–	2.8 ± 25 %	–	IIC2P-14/4-3F35-E

IICs with partial air gap under power conditions

GRADE	CORE LOSS (mW) at			TYPE NUMBER
	f = 100 kHz; $\hat{B}$ = 100 mT; T = 100 °C	f = 500 kHz; $\hat{B}$ = 50 mT; T = 100 °C	f = 1 MHz; $\hat{B}$ = 30 mT; T = 100 °C	
3F35	–	≤ 40	–	IIC2P-14/4-3F35-E

(1) The technology utilized in conjunction with the coupled inductor ("the CL") described in this data sheet includes intellectual property (the "IP") owned by iWatt, Inc. and is covered by one or more of the following U.S. patents : 6,545,450 ; 6,686,727 ; 6,696,823. In connection with the end customer's purchase of the CL from "Ferroxcube USA", the end customer is hereby granted a non-exclusive, worldwide, royalty-free license (without rights to sublicense) to use and incorporate the IP in the end customer's product that also incorporates the CL. In no way does this license extend to customer end products which do not incorporate the CL to implement the IP.

GENERAL DATA

ITEM	SPECIFICATION
Leadframe material	copper (Cu), nickel (Ni) strike & tin (Sn) plated (4-8 mm)
Moulding material	liquid crystal polymer (LCP), flame retardant in accordance with *"ULV94-0"*
Solderability	*"IEC 60068-2-58"*, Part 2, Test Ta, method 1
Taping method	*"IEC 60286-3"* and *"EIA 481-1"*

R_{dc}

≤ 110 μΩ per turn at 10 A

Isolation voltage

> 500 V (DC) between leads and between leads and ferrite core.

Isolation resistance

>100 MΩ between leads.

Leakage inductance

2 windings of 1 turn :

≈ 70 nH

Maximum continuous current (DC)

20 A (depending on copper track thickness on PCB).

Maximum peak current

20 A

MOUNTING

Soldering information

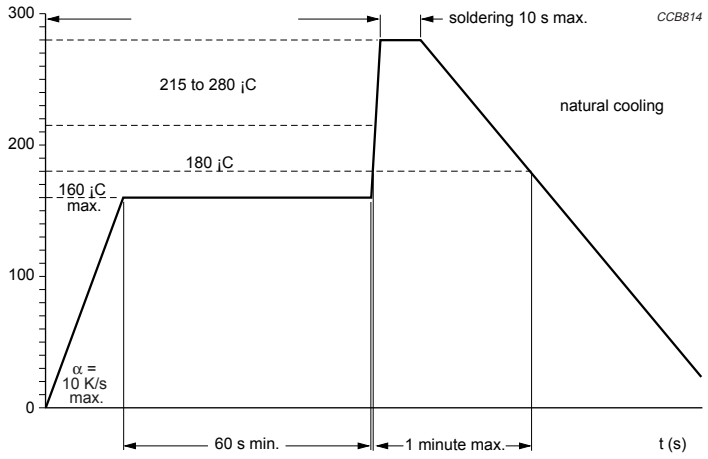

Fig.2 Recommended temperature profile for reflow soldering.

RECOMMENDED SOLDER LANDS

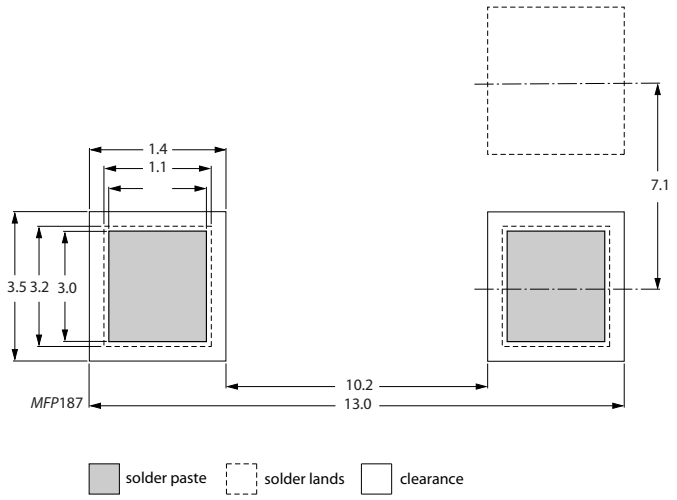

Fig.3 Recommended solder lands

PACKAGING

Tape and reel specifications

All tape and reel specifications are in accordance with the second edition of *"IEC 60286-3"*. Basic dimensions are given in Figs 4 and 5, and Table 1.

Blister tape

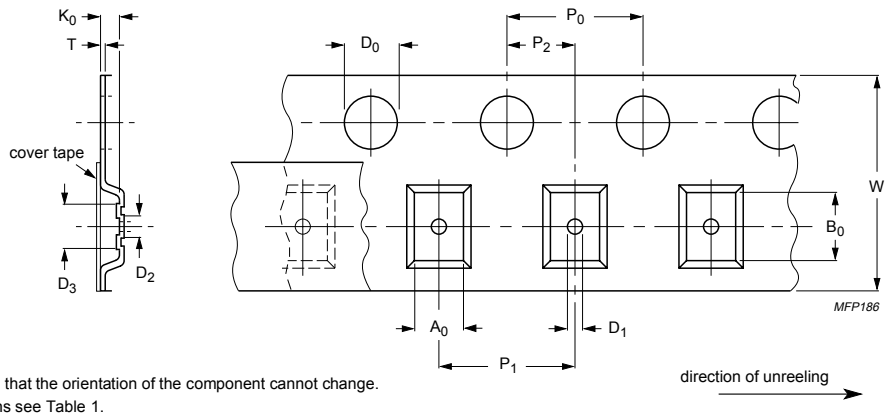

K_0: chosen so that the orientation of the component cannot change.
For dimensions see Table 1.

Fig.4 Blister tape.

Table 1 Dimensions of blister tape; see Fig.4

SYMBOL	DIMENSIONS	TOL.	UNIT
A_0	12.65	± 0.1	mm
B_0	14.75	± 0.1	mm
K_0	4.85	± 0.1	mm
K_1	4.27	± 0.1	mm
W	24	± 0.3	mm
D_0	1.55	± 0.05	mm
D_1	1.5	± 0.25	mm
D_2	3		mm
D_3	6.85		mm
P_0; note 1	4	± 0.1	mm
P_1	16	± 0.1	mm
P_2	2	± 0.1	mm
T	0.35	± 0.1	mm

Note

1. P_0 pitch tolerance over any 10 pitches is ± 0.2 mm.

Reel specifications

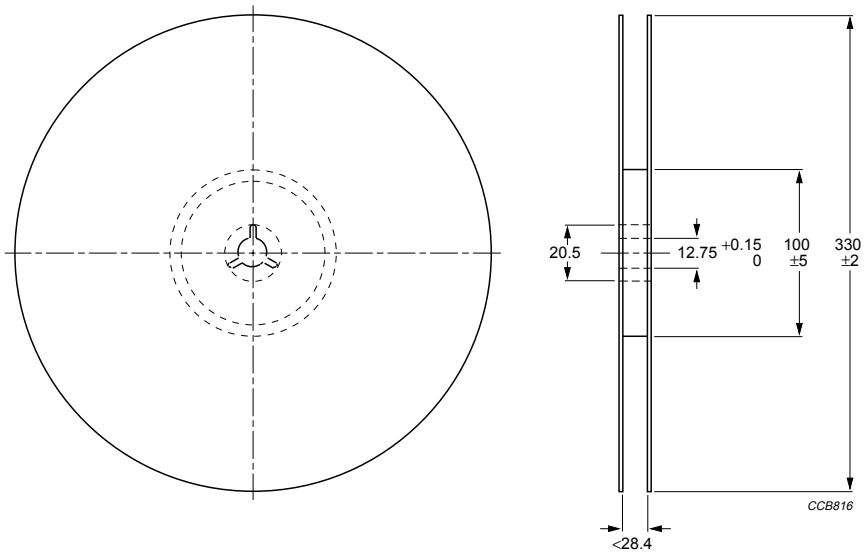

Dimensions in mm.

Fig.5 Reel.

Storage requirements

These storage requirements should be observed in order to ensure the soldering of the exposed electrode:

- Maximum ambient temperature shall not exceed 40 °C. Storage temperature higher than 40 °C could result in the deformation of packaging materials.
- Maximum relative humidity recommended for storage is 70% RH. High humidity with high temperature can accelerate the oxidation of the tin-lead plating on the termination and reduce the solderability of the components.
- Products shall not bestored in environments with the presence of harmful gases containing sulfur or chlorine.

IIC10P-14/4

Effective core parameters

SYMBOL	PARAMETER	VALUE	UNIT
Σ(l/A)	core factor (C1)	2.47	mm^{-1}
V_e	effective volume	338	mm^3
l_e	effective length	28.9	mm
A_e	effective area	11.7	mm^2
m	mass of core half	≈1.85	g

FEATURES

- Inductive SMD component that looks like a standard IC.
- Windings are completed by PCB tracks.
- Suitable for reflow soldering.
- Partial air gap to resist saturation.
- Number of turns can be adapted by track layout.

APPLICATIONS

- Power inductor
- Output choke
- EMI choke with bias current.

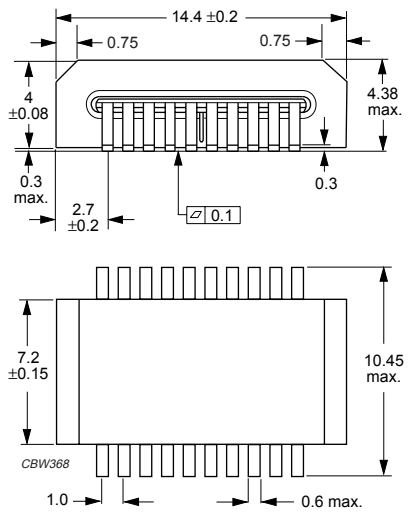

Dimensions in mm.

Fig.1 IIC10P-14/4 outline.

IICs with partial air gap for use as power inductors

GRADE	L (μH) FOR 10 TURNS NO BIAS CURRENT			L (μH) FOR 10 TURNS WITH A BIAS CURRENT OF 1 A			TYPE NUMBER
	f = 100 kHz; T = 25 °C	f = 500 kHz; T = 25 °C	f = 1 MHz; T = 25 °C	f = 100 kHz; T = 25 °C	f = 500 kHz; T = 25 °C	f = 1 MHz; T = 25 °C	
3C30 des	92 ±25%	–	–	≥5	–	–	IIC10P-14/4-3C30
3F4 des	–	–	45 ±25%	–	–	≥5	IIC10P-14/4-3F4
3F35 des	–	70 ±25%	–	–	≥5	–	IIC10P-14/4-3F35

IICs with partial air gap under power conditions

GRADE	CORE LOSS (mW) at			TYPE NUMBER
	f = 100 kHz; $\hat{B}$ = 100 mT; T = 100 °C	f = 500 kHz; $\hat{B}$ = 50 mT; T = 100 °C	f = 1 MHz; $\hat{B}$ = 30 mT; T = 100 °C	
3C30	≤30	–	–	IIC10P-14/4-3C30
3F4	–	–	≤70	IIC10P-14/4-3F4
3F35	–	≤40	–	IIC10P-14/4-3F35

IIC10G-14/4

Effective core parameters

SYMBOL	PARAMETER	VALUE	UNIT
Σ(l/A)	core factor (C1)	2.47	mm^{-1}
V_e	effective volume	338	mm^3
l_e	effective length	28.9	mm
A_e	effective area	11.7	mm^2
m	mass of core half	≈1.85	g

FEATURES

- Inductive SMD component that looks like a standard IC.
- Windings are completed by PCB tracks.
- Suitable for reflow soldering.
- Full air gap to resist saturation.
- Number of turns can be adapted by track layout.

APPLICATIONS

- Power inductor
- Output choke
- EMI choke with bias current.

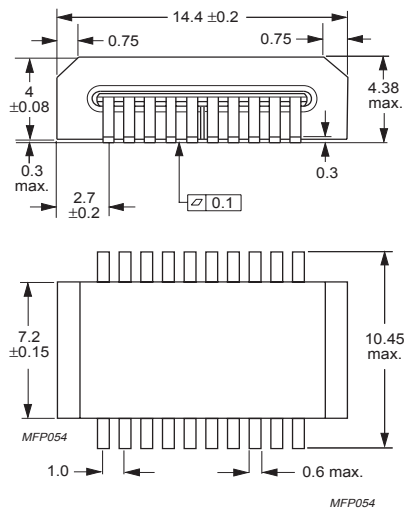

Dimensions in mm.

Fig.2 IIC10G-14/4 outline.

IICs with full air gap for use as power inductors

GRADE	L (μH) FOR 10 TURNS NO BIAS CURRENT		L (μH) FOR 10 TURNS WITH A BIAS CURRENT OF 4 A		TYPE NUMBER
	f = 500 kHz; T = 25 °C	f = 1 MHz; T = 25 °C	f = 500 kHz; T = 25 °C	f = 1 MHz; T = 25 °C	
3F35 des	8 ± 15 %	–	≥ 6	–	IIC10G-14/4-3F35
3F4 des	–	7.5 ± 15 %	–	≥ 5.5	IIC10G-14/4-3F4

IICs with full air gap under power conditions

GRADE	CORE LOSS (mW) at		TYPE NUMBER
	f = 500 kHz; $\hat{B}$ = 50 mT; T = 100 °C	f = 1 MHz; $\hat{B}$ = 30 mT; T = 100 °C	
3F35	≤ 40	–	IIC10G-14/4-3F35
3F4	–	≤ 70	IIC10G-14/4-3F4

IIC10-14/4

Effective core parameters

SYMBOL	PARAMETER	VALUE	UNIT
Σ(l/A)	core factor (C1)	2.47	mm^{-1}
V_e	effective volume	338	mm^3
l_e	effective length	28.9	mm
A_e	effective area	11.7	mm^2
m	mass of core half	≈1.85	g

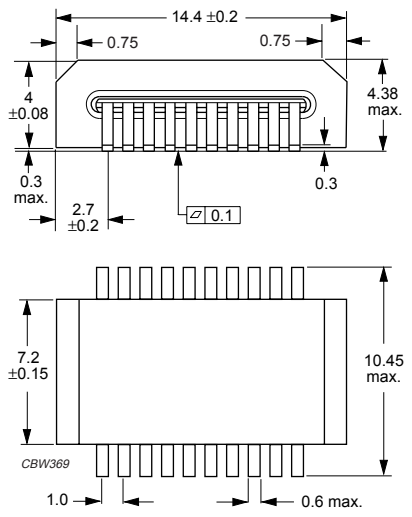

Dimensions in mm.

Fig.3 IIC10-14/4 outline.

FEATURES

- Inductive SMD component that looks like a standard IC.
- Windings are completed by PCB tracks.
- Suitable for reflow soldering.
- Several magnetic functions, depending on track layout.

APPLICATIONS

- Common-mode choke
- Mutli-line choke
- Power transformers
- Signal transformers
- Saturable inductor.

IICs for use as transformer or common-mode chokes

GRADE	A_L (nH) at			CORE LOSS (mW) at		TYPE NUMBER
	f = 10 kHz; T = 25 °C	f = 500 kHz; T = 25 °C	f = 1 MHz; T = 25 °C	f = 500 kHz; $\hat{B}$ = 50 mT; T = 100 °C	f = 1 MHz; $\hat{B}$ = 30 mT; T = 100 °C	
3F4 des	–	–	450 ±25%	–	≤70	IIC10-14/4-3F4
3E6 des	6000 ±30%	–	–	–	–	IIC10-14/4-3E6
3F35 des	–	700 ±25%	–	≤40	–	IIC10-14/4-3F35

IIC for use as a common-mode choke or multi-line choke

GRADE	$\|Z_{typ}\|$ Ω for 1 turn at f = 100 MHz; T = 25 °C(1)	TYPE NUMBER
3S4 des	≈35	IIC10-14/4-3S4

Note

1. Minimum value, $|Z|_{min}$ is −20%.

IIC with rectangular hysteresis loop for use in magnetic regulators

GRADE	E·t product (V.μs) at		TYPE NUMBER
	f = 100 kHz; H = 800 A/m; T = 100 °C; I_{reset} = 70 mA; 10 turns	f = 100 kHz; H = 800 A/m; T = 100 °C; I_{reset} = 0 mA; 10 turns	
3R1 des	≥33	≤12	IIC10-14/4-3R1

GENERAL DATA

ITEM	SPECIFICATION
Leadframe material	copper (Cu), tin-lead (SnPb) plated, lead-free (Sn) available on request.
Moulding material	liquid crystal polymer (LCP), flame retardant in accordance with *"ULV94-0"*
Solderability	*"IEC 60068-2-58"*, Part 2, Test Ta, method 1
Taping method	*"IEC 60286-3"* and *"EIA 481-1"*

R_{dc}

≈ 65 mΩ (25 °C) and ≈ 85 mΩ (100 °C) for 10 turns including 20 solder joints (assuming 70 μm Cu PCB tracks).

Isolation voltage

>500 V (DC) between leads and between leads and ferrite core.

Isolation resistance

>100 MΩ between leads.

Inter winding capacitance

2 windings of 5 turns:

unifilar ≈5 pF

bifilar ≈10 pF.

(depending on track layout; see Figs 2 and 3)

Leakage inductance

2 windings of 5 turns:

unifilar ≈1.8 μH

bifilar ≈0.2 μH.

Maximum continuous current (DC)

4 A (depending on copper track thickness on PCB).

Maximum peak current

10 A.

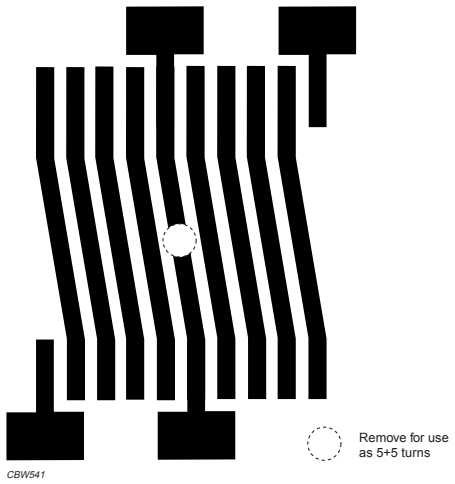

Fig.4 Unifilar track pattern.

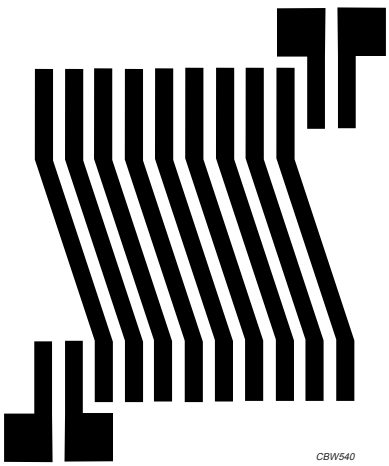

Fig.5 Bifilar track pattern.

MOUNTING

Soldering information

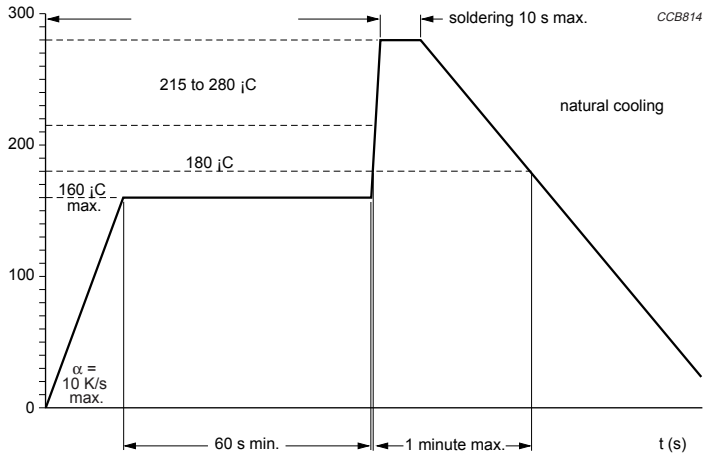

Fig.6 Recommended temperature profile for reflow soldering.

RECOMMENDED SOLDER LANDS

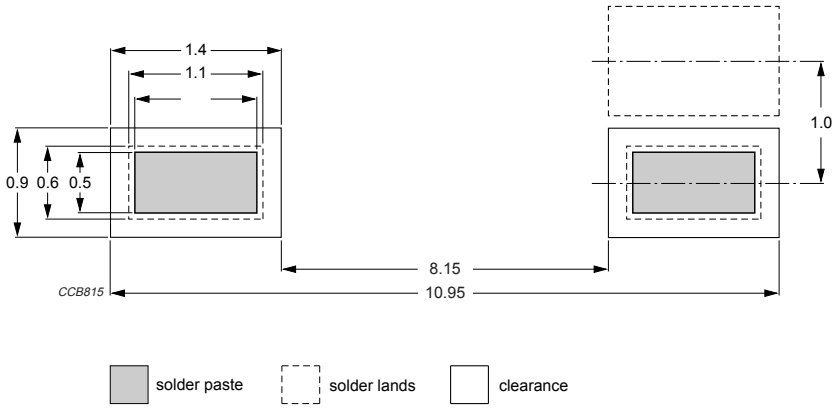

Fig.7 Recommended solder lands

PACKAGING

Tape and reel specifications

All tape and reel specifications are in accordance with the second edition of *"IEC 60286-3"*. Basic dimensions are given in Figs 8 and 9, and Table 1.

Blister tape

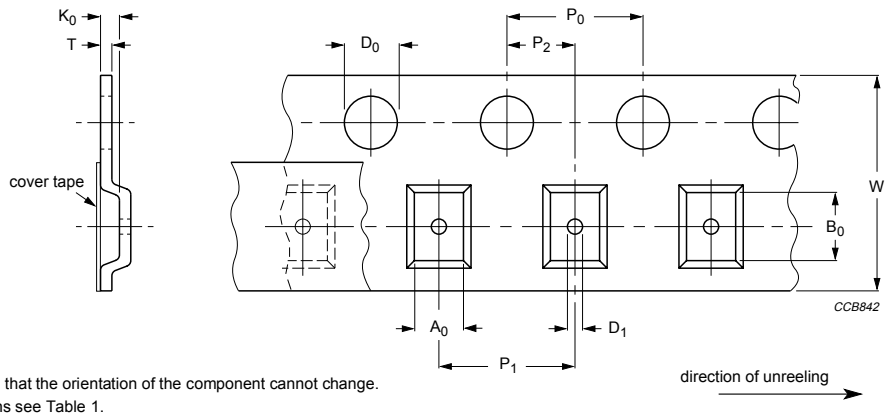

K_0: chosen so that the orientation of the component cannot change.
For dimensions see Table 1.

Fig.8 Blister tape.

Table 1 Dimensions of blister tape; see Fig.8

SYMBOL	DIMENSIONS	TOL.	UNIT
A_0	10.6	±0.1	mm
B_0	14.75	±0.1	mm
K_0	4.75	±0.1	mm
W	24	±0.3	mm
D_0	1.5	±0.1	mm
D_1	1.5	±0.25	mm
P_0; note 1	4	±0.1	mm
P_1	12	±0.1	mm
P_2	6	±0.1	mm
T	0.3	±0.1	mm

Note

1. P_0 pitch tolerance over any 10 pitches is ±0.2 mm.

Reel specifications

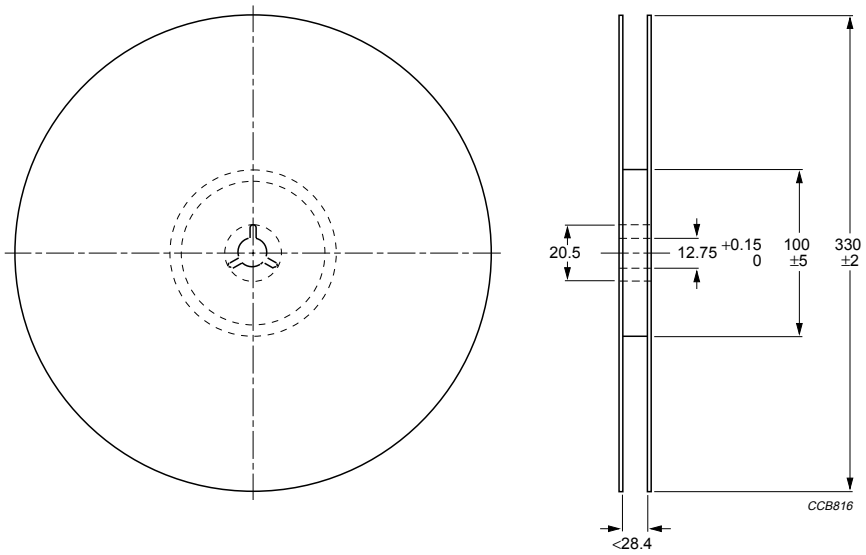

Dimensions in mm.

Fig.9 Reel.

Storage requirements

These storage requirements should be observed in order to ensure the soldering of the exposed electrode:

- Maximum ambient temperature shall not exceed 40 °C. Storage temperature higher than 40 °C could result in the deformation of packaging materials.
- Maximum relative humidity recommended for storage is 70% RH. High humidity with high temperature can accelerate the oxidation of the tin-lead plating on the termination and reduce the solderability of the components.
- Products shall not bestored in environments with the presence of harmful gases containing sulfur or chlorine.

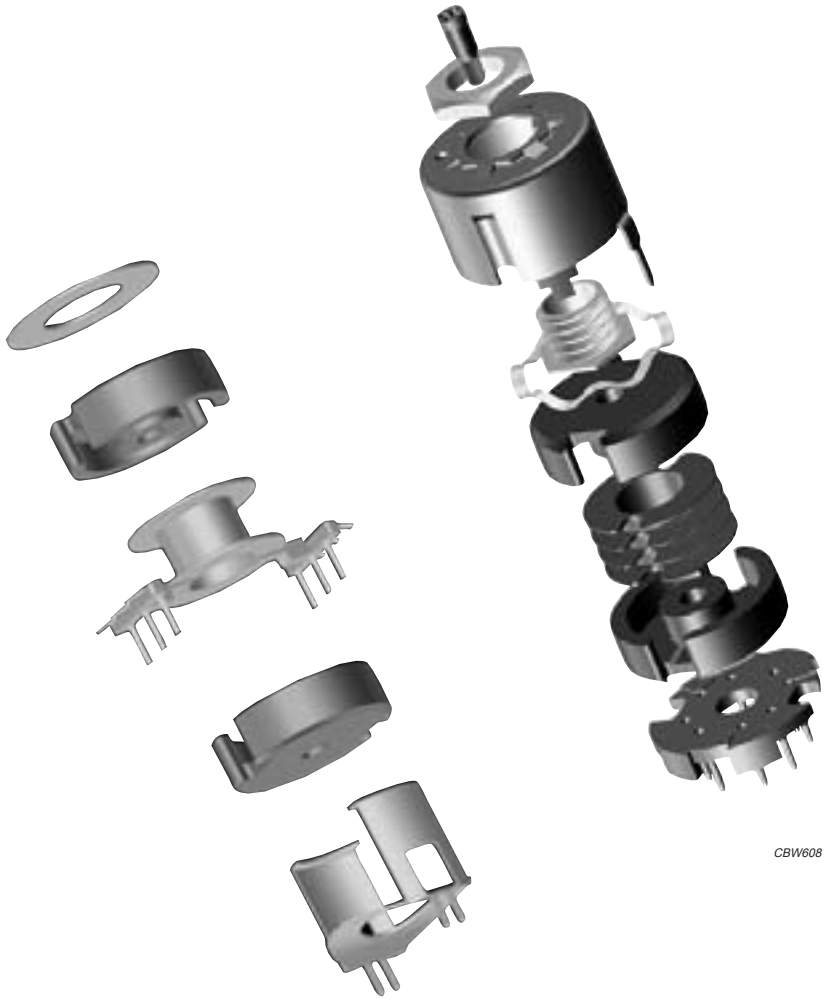
CBW608

PRODUCT OVERVIEW AND TYPE NUMBER STRUCTURE

Product overview P cores

CORE TYPE	V_e (mm^3)	A_e (mm^2)	MASS (g)
P9/5	126	10.1	0.8
P11/7	251	16.2	1.8
P11/7/I	309	19.0	1.9
P14/8	495	25.1	3.2
P14/18/I	628	29.9	3.5
P18/11	1120	43.3	6.0
P18/11/I	1270	47.5	7
P22/13	2000	63.4	12
P22/13/I	2460	73.4	13
P26/16	3530	93.9	20
P26/16/I	4370	110	21
P30/19	6190	137	34
P36/22	10700	202	54
P42/29	18200	265	104
P66/56	88200	717	550

- In accordance with IEC 62317, part 2.

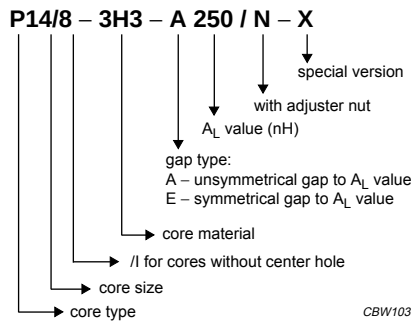

Fig.1 Type number structure for cores.

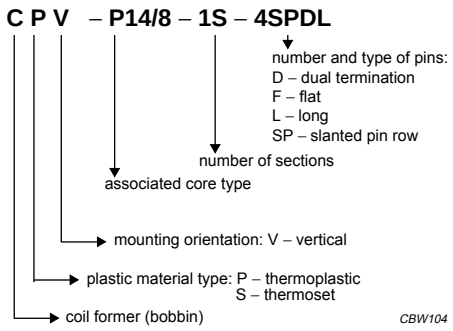

Fig.2 Type number structure for coil formers.

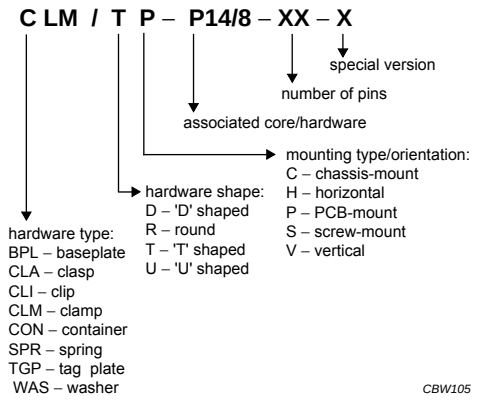

Fig.3 Type number structure for hardware.

CORE SETS

Effective core parameters

SYMBOL	PARAMETER	VALUE	UNIT
Σ(l/A)	core factor (C1)	1.24	mm^{-1}
V_e	effective volume	126	mm^3
l_e	effective length	12.5	mm
A_e	effective area	10.1	mm^2
A_{min}	minimum area	7.9	mm^2
m	mass of set	≈ 0.8	g

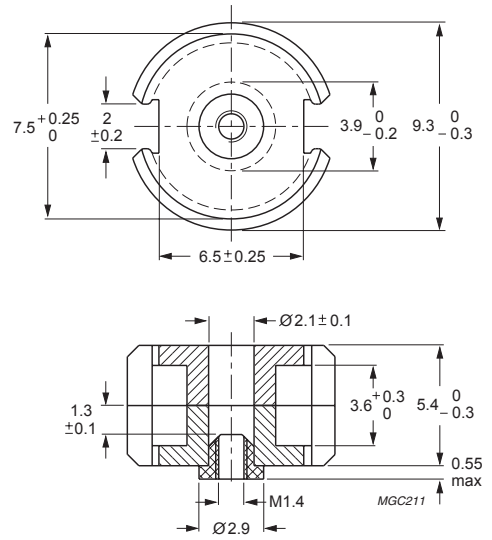

Dimensions in mm.

Fig.1 P9/5 core set.

Core sets for filter applications

Clamping force for A_L measurements, 25 ±5 N.

GRADE	A_L (nH)	μ_e	TOTAL AIR GAP (μm)	TYPE NUMBER (WITH NUT)	TYPE NUMBER (WITHOUT NUT)
3D3 sup	40 ±3%	≈ 39	≈ 410	P9/5-3D3-E40/N	P9/5-3D3-E40
	63 ±3%	≈ 62	≈ 230	P9/5-3D3-A63/N	P9/5-3D3-A63
	630 ±25%	≈ 620	≈ 0	–	P9/5-3D3
3H3 sup	40 ±3%	≈ 39	≈ 430	P9/5-3H3-E40/N	P9/5-3H3-E40
	63 ±3%	≈ 62	≈ 250	P9/5-3H3-A63/N	P9/5-3H3-A63
	1100 ±25%	≈ 1080	≈ 0	–	P9/5-3H3

Core sets for general purpose transformers and power applications

Clamping force for A_L measurements, 10 ±5 N.

GRADE	A_L (nH)	μ_e	AIR GAP (μm)	TYPE NUMBER
3C81	1350 ±25%	≈ 1200	≈ 0	P9/5-3C81
3C91 des	1350 ±25%	≈ 1200	≈ 0	P9/5-3C91
3F3	1100 ±25%	≈ 1080	≈ 0	P9/5-3F3

Core sets of high permeability grades

Clamping force for A_L measurements, 25 ±5 N.

GRADE	A_L (nH)	μ_e	AIR GAP (μm)	TYPE NUMBER
3E27	2300 ±25%	≈ 2020	≈ 0	P9/5-3E27

Properties of core sets under power conditions

GRADE	B (mT) at	CORE LOSS (W) at			
	H = 250 A/m; f = 25 kHz; T = 100 °C	f = 25 kHz; $\hat{B}$ = 200 mT; T = 100 °C	f = 100 kHz; $\hat{B}$ = 100 mT; T = 100 °C	f = 100 kHz; $\hat{B}$ = 200 mT; T = 100 °C	f = 400 kHz; $\hat{B}$ = 50 mT; T = 100 °C
3C81	≥320	≤ 0.035	–	–	–
3C91	≥315	–	≤ 0.008[1]	≤ 0.06[1]	–
3F3	≥315	–	≤ 0.015	–	≤ 0.03

Note

1. Measured at 60 °C.

INDUCTANCE ADJUSTERS

General data

ITEM	SPECIFICATION
Material of head and thread	polypropylene (PP), glass fibre reinforced
Maximum operating temperature	125 °C

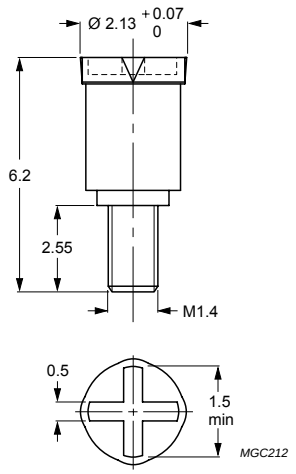

Dimensions in mm.

Fig.2 P9/5 inductance adjuster.

Inductance adjuster selection chart sup (applies to all types)

GRADE	A_L (nH)	TYPES FOR LOW ADJUSTMENT	$\Delta L/L$ (1)	TYPES FOR MEDIUM ADJUSTMENT	$\Delta L/L$ (1)	TYPES FOR HIGH ADJUSTMENT	$\Delta L/L$ (1)
3D3	40	–	–	ADJ-P9/P11-YELLOW	11	–	–
	63	–	–	–	18	ADJ-P9/P11-BROWN	31

Note

1. Maximum adjustment range.

COIL FORMERS

General data for coil former CP-P9/5-1S

PARAMETER	SPECIFICATION
Coil former material	polybutyleneterephtalate (PBT), glass reinforced, flame retardant in accordance with *"UL 94V-0"*; UL file number E45329 (R)
Maximum operating temperature	155 °C, *"IEC 60085"*, class F

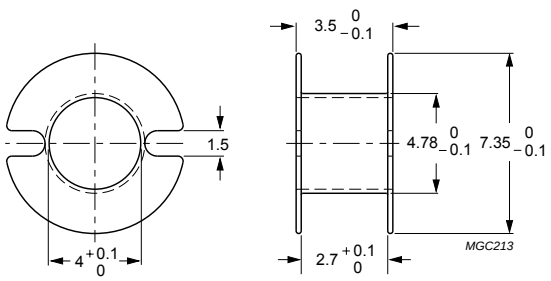

Dimensions in mm.

Fig.3 Coil former: CP-P9/5-1S.

Winding data and area product for coil former CP-P9/5-1S

NUMBER OF SECTIONS	WINDING AREA (mm^2)	MINIMUM WINDING WIDTH (mm)	AVERAGE LENGTH OF TURN (mm)	AREA PRODUCT Ae x Aw (mm^4)	TYPE NUMBER
1	3.1	2.5	18.9	31.3	CP-P9/5-1S

MOUNTING PARTS

General data

ITEM	REMARKS	FIGURE	TYPE NUMBER
Clamp	spring steel, tin plated	4	CLM/TP-P9/5

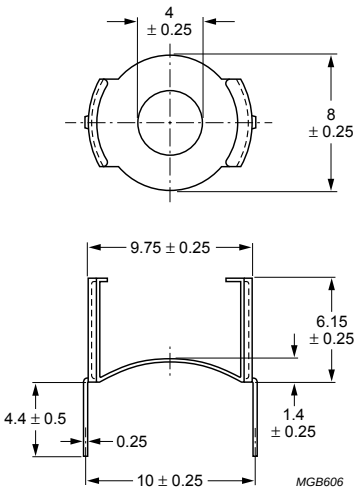

Dimensions in mm.

Fig.4 Clamp: CLM/TP-P9/5.

CORE SETS

Effective core parameters

SYMBOL	PARAMETER	VALUE	UNIT
Σ(l/A)	core factor (C1)	0.956	mm^{-1}
V_e	effective volume	251	mm^3
l_e	effective length	15.5	mm
A_e	effective area	16.2	mm^2
A_{min}	minimum area	13.2	mm^2
m	mass of set	≈ 1.8	g

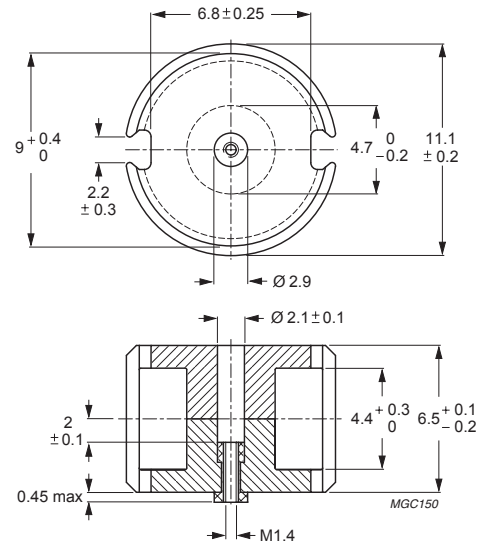

Dimensions in mm.

Fig.1 P11/7 core set.

Core sets for filter applications

Clamping force for A_L measurements, 35 ±10 N.

GRADE	A_L (nH)	μ_e	TOTAL AIR GAP (μm)	TYPE NUMBER (WITH NUT)	TYPE NUMBER (WITHOUT NUT)
3D3 sup	16 ±3%	≈ 12	≈ 2210	P11/7-3D3-E16/N	P11/7-3D3-E16
	25 ±3%	≈ 19	≈ 1280	P11/7-3D3-E25/N	P11/7-3D3-E25
	40 ±3%	≈ 31	≈ 710	P11/7-3D3-E40/N	P11/7-3D3-E40
	63 ±3%	≈ 48	≈ 400	P11/7-3D3-E63/N	P11/7-3D3-E63
	100 ±3%	≈ 76	≈ 220	P11/7-3D3-A100/N	P11/7-3D3-A100
	800 ±25%	≈ 610	≈ 0	–	P11/7-3D3
3H3 sup	160 ±3%	≈ 122	≈ 140	P11/7-3H3-A160/N	P11/7-3H3-A160
	250 ±3%	≈ 190	≈ 80	P11/7-3H3-A250/N	P11/7-3H3-A250
	1650 ±25%	≈ 1260	≈ 0	–	P11/7-3H3

Core sets for general purpose transformers and power applications

Clamping force for A_L measurements, 35 ±10 N.

GRADE	A_L (nH)	μ_e	AIR GAP (μm)	TYPE NUMBER
3C81	100 ±3%	≈ 76	≈ 240	P11/7-3C81-A100
	160 ±3%	≈ 122	≈ 140	P11/7-3C81-A160
	250 ±3%	≈ 190	≈ 85	P11/7-3C81-A250
	2050 ±25%	≈ 1560	≈ 0	P11/7-3C81
3C91 des	2050 ±25%	≈ 1560	≈ 0	P11/7-3C91
3F3	100 ±3%	≈ 76	≈ 240	P11/7-3F3-A100
	160 ±3%	≈ 122	≈ 140	P11/7-3F3-A160
	250 ±5%	≈ 190	≈ 80	P11/7-3F3-A250
	1650 ±25%	≈ 1260	≈ 0	P11/7-3F3

Core sets of high permeability grades

Clamping force for A_L measurements, 35 ±10 N.

GRADE	A_L (nH)	μ_e	AIR GAP (μm)	TYPE NUMBER
3E27	3400 ±25%	≈ 2600	≈ 0	P11/7-3E27

Properties of core sets under power conditions

GRADE	B (mT) at	CORE LOSS (W) at			
	H = 250 A/m; f = 25 kHz; T = 100 °C	f = 25 kHz; $\hat{B}$ = 200 mT; T = 100 °C	f = 100 kHz; $\hat{B}$ = 100 mT; T = 100 °C	f = 100 kHz; $\hat{B}$ = 200 mT; T = 100 °C	f = 400 kHz; $\hat{B}$ = 50 mT; T = 100 °C
3C81	≥320	≤ 0.05	–	–	–
3C91	≥315	–	≤ 0.015(1)	≤ 0.12(1)	–
3F3	≥315	–	≤ 0.03	–	≤ 0.05

Note

1. Measured at 60 °C.

INDUCTANCE ADJUSTERS

General data

PARAMETER	SPECIFICATION
Material of head and thread	polypropylene (PP), glass fibre reinforced
Maximum operating temperature	125 °C

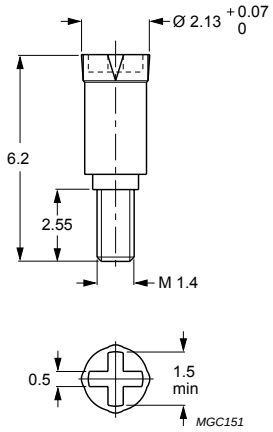

Dimensions in mm.

Fig.2 P11/7 inductance adjuster.

Inductance adjuster selection char sup (applies to all types)

GRADE	A_L (nH)	TYPES FOR LOW ADJUSTMENT	ΔL/L(1)	TYPES FOR MEDIUM ADJUSTMENT	ΔL/L(1)	TYPES FOR HIGH ADJUSTMENT	ΔL/L(1)
3H3	100	–	–	ADJ-P9/P11-YELLOW	13	ADJ-P9/P11-BROWN	24
	160	ADJ-P9/P11-YELLOW	8	ADJ-P9/P11-BROWN	15	ADJ-P9/P11-GREY	22
	250	ADJ-P9/P11-BROWN	9	ADJ-P9/P11-GREY	14	–	–
3D3	16	–	–	ADJ-P9/P11-YELLOW	19	–	–
	25	–	–	–	–	ADJ-P9/P11-YELLOW	30
	40	–	–	–	–	ADJ-P9/P11-YELLOW	24
	63	–	–	ADJ-P9/P11-YELLOW	18	–	–
	100	–	–	ADJ-P9/P11-YELLOW	11	–	–

Note

1. Maximum adjustment range.

COIL FORMERS

General data CP-P11/7-1S coil former

PARAMETER	SPECIFICATION
Coil former material	polybutyleneterephtalate (PBT), glass reinforced, flame retardant in accordance with *"UL 94V-0"*; UL file number E45329 (R)
Maximum operating temperature	155 °C, *"IEC 60085"*, class F

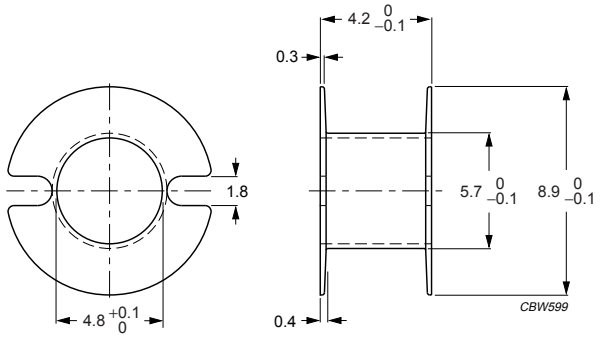

Dimensions in mm.

Fig.3 Coil former: CP-P11/7-1S.

Winding data and area product for CP-P11/7-1S coil former

NUMBER OF SECTIONS	WINDING AREA (mm^2)	MINIMUM WINDING WIDTH (mm)	AVERAGE LENGTH OF TURN (mm)	AREA PRODUCT Ae x Aw (mm^4)	TYPE NUMBER
1	4.8	3.1	22.6	77.8	CP-P11/7-1S

General data for CP-P11/7-A coil former

PARAMETER	SPECIFICATION
Coil former material	acetal (POM), glass reinforced, flame retardant in accordance with *"UL 94-HB"*; UL file number E66288(R)
Maximum operating temperature	105 °C

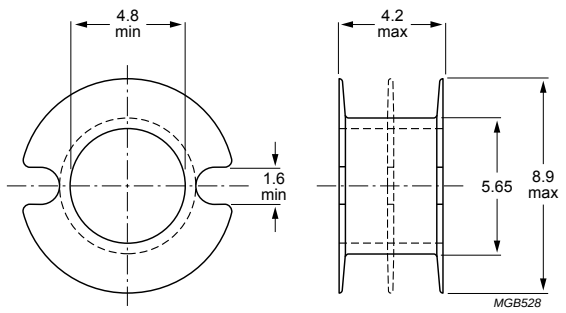

Dimensions in mm.

Fig.4 Coil former: CP-P11/7-A.

Winding data and area product for CP-P11/7-A coil former

NUMBER OF SECTIONS	MINIMUM WINDING AREA (mm^2)	NOMINAL WINDING WIDTH (mm)	AVERAGE LENGTH OF TURN (mm)	AREA PRODUCT Ae x Aw (mm^4)	TYPE NUMBER
1	4.77	3.42	22.7	77.3	CP-P11/7-1S-A
2	2×2.00	2×1.52	22.7	2 x 32.4	CP-P11/7-2S-A
3	3×1.16	3×0.91	22.7	3 x 18.8	CP-P11/7-3S-A

MOUNTING PARTS

General data

ITEM	REMARKS	FIGURE	TYPE NUMBER
Tag plate	material: phenolformaldehyde (PF), glass reinforced	5	TGP-P11/7-C
	flame retardant: in accordance with *"UL 94V-0"*; file number E41429		
	maximum operating temperature: 180 °C, *"IEC 60085"*, class H		
	pins : copper-tin alloy (CuSn), tin (Sn) plated		
	resistance to soldering heat in accordance with *"IEC 60068-2-20"*, Part 2, Test Tb, method 1B: 350 °C, 3.5 s		
	solderability in accordance with *"IEC 60068-2-20"*, Part 2, Test Ta, method 1: 235 °C, 2 s		
Container	copper-zinc alloy (CuZn), tin (Sn) plated	6	CON-P11/7
	earth pins: presoldered		
Spring	CrNi-steel	7	SPR-P11/7
	spring force: ≈35 N when mounted		
Clamp	spring steel, tin-plated	7	CLM/TP-P11/7

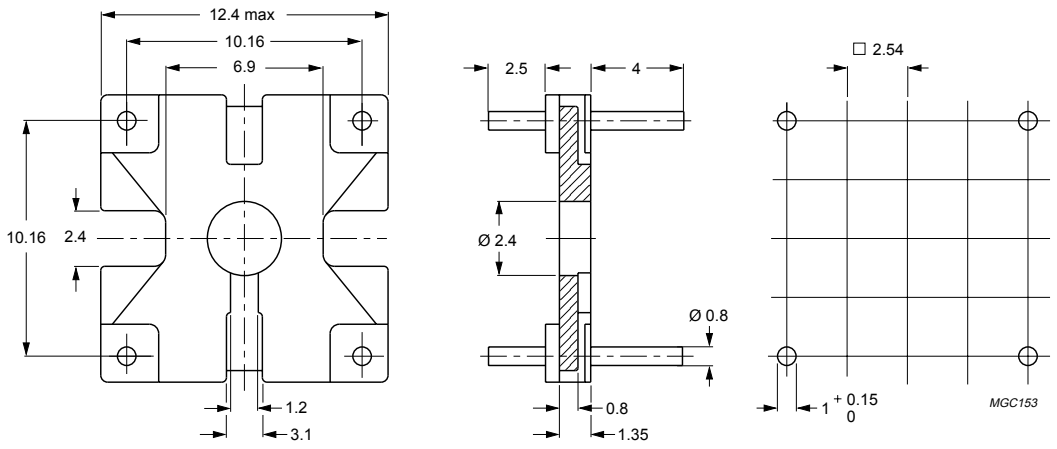

Dimensions in mm.

Fig.5 P11/7 tag plate.

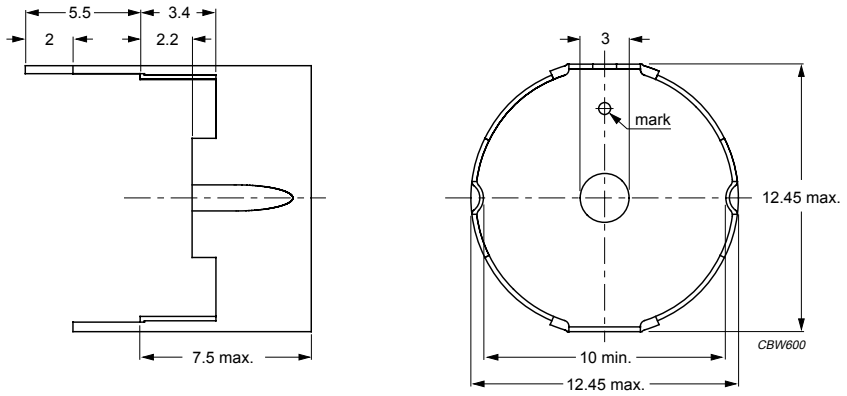

Dimensions in mm.

Fig.6 Container: CON-P11/7.

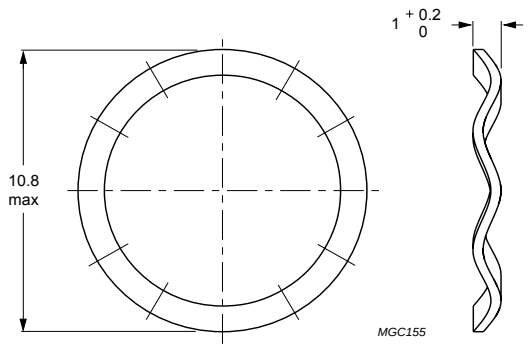

Dimensions in mm.

Fig.7 Spring: SPR-P11/7.

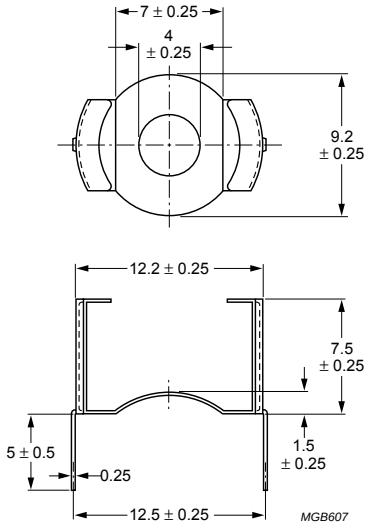

Dimensions in mm.

Fig.7 Clamp: CLM/TP-P11/7.

CORE SETS

Effective core parameters

SYMBOL	PARAMETER	VALUE	UNIT
Σ(l/A)	core factor (C1)	0.860	mm^{-1}
V_e	effective volume	309	mm^3
l_e	effective length	16.3	mm
A_e	effective area	19.0	mm^2
A_{min}	minimum area	13.7	mm^2
m	mass of set	≈ 1.9	g

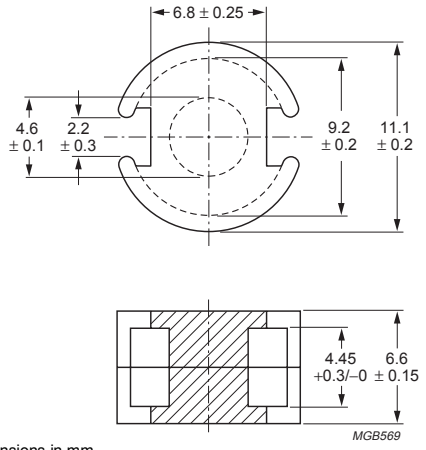

Dimensions in mm.

Fig.1 P11/7/I core set.

Core sets for general purpose transformers and power applications

Clamping force for A_L measurements, 10 ±5 N.

GRADE	A_L (nH)	μ_e	AIR GAP (μm)	TYPE NUMBER
3C81	63 ±3%	≈ 43	≈ 500	P11/7/I-3C81-A63
	100 ±3%	≈ 68	≈ 290	P11/7/I-3C81-A100
	160 ±3%	≈ 109	≈ 170	P11/7/I-3C81-A160
	250 ±5%	≈ 171	≈ 100	P11/7/I-3C81-A250
	315 ±5%	≈ 215	≈ 75	P11/7/I-3C81-A315
	2100 ±25%	≈ 1430	≈ 0	P11/7/I-3C81
3C91 des	2100 ±25%	≈ 1430	≈ 0	P11/7/I-3C91
3F3	63 ±3%	≈ 43	≈ 500	P11/7/I-3F3-A63
	100 ±3%	≈ 68	≈ 290	P11/7/I-3F3-A100
	160 ±3%	≈ 109	≈ 170	P11/7/I-3F3-A160
	250 ±5%	≈ 171	≈ 100	P11/7/I-3F3-A250
	315 ±5%	≈ 215	≈ 75	P11/7/I-3F3-A315
	1750 ±25%	≈ 1195	≈ 0	P11/7/I-3F3

Properties of core sets under power conditions

GRADE	B (mT) at	CORE LOSS (W) at			
	H = 250 A/m; f = 25 kHz; T = 100 °C	f = 25 kHz; $\hat{B}$ = 200 mT; T = 100 °C	f = 100 kHz; $\hat{B}$ = 100 mT; T = 100 °C	f = 100 kHz; $\hat{B}$ = 200 mT; T = 100 °C	f = 400 kHz; $\hat{B}$ = 50 mT; T = 100 °C
3C81	≥320	≤ 0.07	–	–	–
3C91	≥315	–	≤ 0.016(1)	≤ 0.12(1)	–
3F3	≥315	–	≤ 0.04	–	≤ 0.06

Note

1. Measured at 60 °C.

BOBBINS AND ACCESSORIES

Coil formers, winding data and mounting parts are equal to those of *"P11/7"*, but *"area product"* is different.

Winding data and area product (for P11/7/I) for CP-P11/7-1S coil former

NUMBER OF SECTIONS	WINDING AREA (mm^2)	MINIMUM WINDING WIDTH (mm)	AVERAGE LENGTH OF TURN (mm)	AREA PRODUCT Ae x Aw (mm^4)	TYPE NUMBER
1	4.8	3.1	22.6	91.2	CP-P11/7-1S

Winding data and area product (for P11/7/I) for CP-P11/7-A coil former

NUMBER OF SECTIONS	MINIMUM WINDING AREA (mm^2)	NOMINAL WINDING WIDTH (mm)	AVERAGE LENGTH OF TURN (mm)	AREA PRODUCT Ae x Aw (mm^4)	TYPE NUMBER
1	4.77	3.42	22.7	90.6	CP-P11/7-1S-A
2	2 × 2.00	2 × 1.52	22.7	2 x 38.0	CP-P11/7-2S-A
3	3 × 1.16	3 × 0.91	22.7	3 x 22.0	CP-P11/7-3S-A

CORE SETS

Effective core parameters

SYMBOL	PARAMETER	VALUE	UNIT
Σ(l/A)	core factor (C1)	0.789	mm^{-1}
V_e	effective volume	495	mm^3
l_e	effective length	19.8	mm
A_e	effective area	25.1	mm^2
A_{min}	minimum area	19.8	mm^2
m	mass of set	≈ 3.2	g

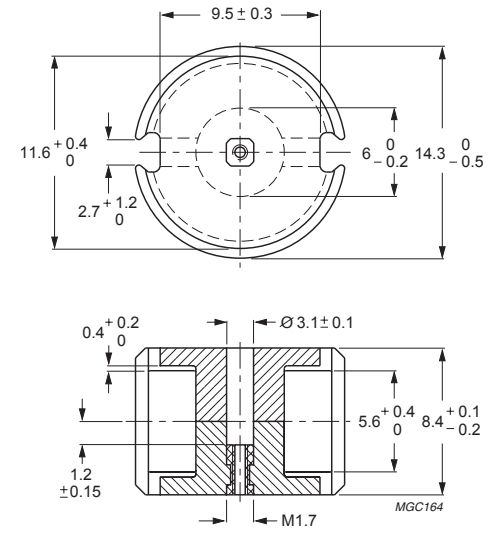

Dimensions in mm.

Fig.1 P14/8 core set.

Core sets for filter applications

Clamping force for A_L measurements, 60 ±20 N.

GRADE	A_L (nH)	μ_e	TOTAL AIR GAP (μm)	TYPE NUMBER (WITH NUT)	TYPE NUMBER (WITHOUT NUT)
3D3 sup	40 ± 3%	≈ 25	≈ 1170	P14/8-3D3-E40/N	P14/8-3D3-E40
	63 ± 3%	≈ 40	≈ 650	P14/8-3D3-E63/N	P14/8-3D3-E63
	100 ± 3%	≈ 63	≈ 360	P14/8-3D3-E100/N	P14/8-3D3-E100
	1000 ± 25%	≈ 630	≈ 0	–	P14/8-3D3
3H3 sup	160 ± 3%	≈ 100	≈ 220	P14/8-3H3-A160/N	P14/8-3H3-A160
	250 ± 3%	≈ 157	≈ 130	P14/8-3H3-A250/N	P14/8-3H3-A250
	315 ± 3%	≈ 198	≈ 100	P14/8-3H3-A315/N	P14/8-3H3-A315
	400 ± 3%	≈ 251	≈ 75	P14/8-3H3-A400/N	P14/8-3H3-A400
	2150 ± 25%	≈ 1350	≈ 0	–	P14/8-3H3

Core sets for general purpose transformers and power applications

Clamping force for A_L measurements, 60 ±20 N.

GRADE	A_L (nH)	μ_e	AIR GAP (μm)	TYPE NUMBER
3C81	63 ± 3%	≈ 40	≈ 680	P14/8-3C81-E63
	100 ± 3%	≈ 63	≈ 390	P14/8-3C81-A100
	160 ± 3%	≈ 100	≈ 220	P14/8-3C81-A160
	250 ± 3%	≈ 157	≈ 130	P14/8-3C81-A250
	315 ± 3%	≈ 198	≈ 100	P14/8-3C81-A315
	2800 ± 25%	≈ 1760	≈ 0	P14/8-3C81
3C91 des	2800 ± 25%	≈ 1760	≈ 0	P14/8-3C91
3F3	63 ± 3%	≈ 40	≈ 680	P14/8-3F3-E63
	100 ± 3%	≈ 63	≈ 390	P14/8-3F3-A100
	160 ± 3%	≈ 100	≈ 220	P14/8-3F3-A160
	250 ± 3%	≈ 157	≈ 130	P14/8-3F3-A250
	315 ± 3%	≈ 198	≈ 100	P14/8-3F3-A315
	2000 ± 25%	≈ 1260	≈ 0	P14/8-3F3

Core sets of high permeability grades

Clamping force for A_L measurements, 60 ±20 N.

GRADE	A_L (nH)	μ_e	AIR GAP (μm)	TYPE NUMBER
3E27	5750 ± 25%	≈ 3610	≈ 0	P14/8-3E27

Properties of core sets under power conditions

GRADE	B (mT) at	CORE LOSS (W) at			
	H = 250 A/m; f = 25 kHz; T = 100 °C	f = 25 kHz; $\hat{B}$ = 200 mT; T = 100 °C	f = 100 kHz; $\hat{B}$ = 100 mT; T = 100 °C	f = 100 kHz; $\hat{B}$ = 200 mT; T = 100 °C	f = 400 kHz; $\hat{B}$ = 50 mT; T = 100 °C
3C81	≥320	≤ 0.1	–	–	–
3C91	≥315	–	≤ 0.03[1]	≤ 0.22[1]	–
3F3	≥315	–	≤ 0.06	–	≤ 0.1

Note

1. Measured at 60 °C.

INDUCTANCE ADJUSTERS

General data

PARAMETER	SPECIFICATION
Material of head and thread	polypropylene (PP), glass fibre reinforced
Maximum operating temperature	125 °C

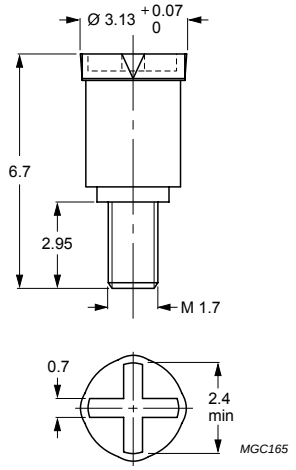

Dimensions in mm.

Fig.2 P14/8 inductance adjuster.

Inductance adjuster selection cha sup (applies to all types)

GRADE	A_L (nH)	TYPES FOR LOW ADJUSTMENT	ΔL/L(1)	TYPES FOR MEDIUM ADJUSTMENT	ΔL/L(1)	TYPES FOR HIGH ADJUSTMENT	ΔL/L(1)
3H3	100	–	–	ADJ-P14-ORANGE	14	–	–
	160	–	–	ADJ-P14-WHITE	17	ADJ-P14-BROWN	24
	250	ADJ-P14-WHITE	10	ADJ-P14-BROWN	15	–	–
	315	ADJ-P14-WHITE	8	–	–	–	–
	400	ADJ-P14-BROWN	9	–	–	–	–
	630	ADJ-P14-BROWN	4	–	–	–	–
3D3	40	–	–	–	–	ADJ-P14-ORANGE	24
	63	–	–	–	–	ADJ-P14-ORANGE	20
	100	ADJ-P14-ORANGE	11	–	–	–	–

Note

1. Maximum adjustment range.

COIL FORMERS

General data for CP-P14/8 coil former

PARAMETER	SPECIFICATION
Coil former material	polybutyleneterephtalate (PBT), glass reinforced, flame retardant in accordance with *"UL 94V-0"*; UL file number E45329 (R)
Maximum operating temperature	155 °C, *"IEC 60085"*, class F

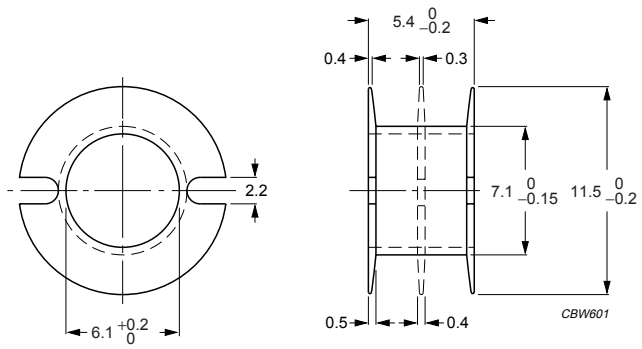

Dimensions in mm.

Fig.3 Coil former CP-P14/8.

Winding data and area product for CP-P14/8 coil former

NUMBER OF SECTIONS	WINDING AREA (mm^2)	MINIMUM WINDING WIDTH (mm)	AVERAGE LENGTH OF TURN (mm)	AREA PRODUCT Ae x Aw (mm^4)	TYPE NUMBER
1	8.8	4.1	28.9	221	CP-P14/8-1S
2	2×4.0	2×1.85	28.9	2 x 100	CP-P14/8-2S

General data for CP-P14/8-A coil former

PARAMETER	SPECIFICATION
Coil former material	acetal (POM), glass reinforced, flame retardant in accordance with *"UL 94-HB"*; UL file number E66288(R)
Maximum operating temperature	155 °C, *"IEC 60085"*, class F

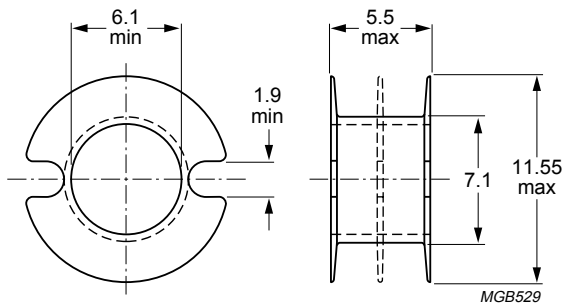

Dimensions in mm.

Fig.4 Coil former CP-P14/8-A.

Winding data and area product for CP-P14/8-A coil former

NUMBER OF SECTIONS	MINIMUM WINDING AREA (mm^2)	NOMINAL WINDING WIDTH (mm)	AVERAGE LENGTH OF TURN (mm)	AREA PRODUCT Ae x Aw (mm^4)	TYPE NUMBER
1	9.4	4.5	29.0	236	CP-P14/8-1S-A
2	2 x 4.32	2 x 2.0	29.0	2 x 108	CP-P14/8-2S-A
3	3 × 2.19	3 × 1.2	29.0	3 x 55.0	CP-P14/8-3S-A

General data 4-pins P14/8 coil former for PCB mounting

PARAMETER	SPECIFICATION
Coil former material	polyamide (PA6.6), glass reinforced, flame retardant in accordance with *"UL 94V-0"*; UL file number E41938(M)
Maximum operating temperature	130 °C, *"IEC 60085"* , class B
Pin material	copper-zinc alloy (CuZn), tin (Sn) plated
Resistance to soldering heat	*"IEC 60068-2-20"*, Part 2, Test Tb, method 1B, 350 °C, 3.5 s
Solderability	*"IEC 60068-2-20"*, Part 2, Test Ta, method 1, 235 °C, 2 s

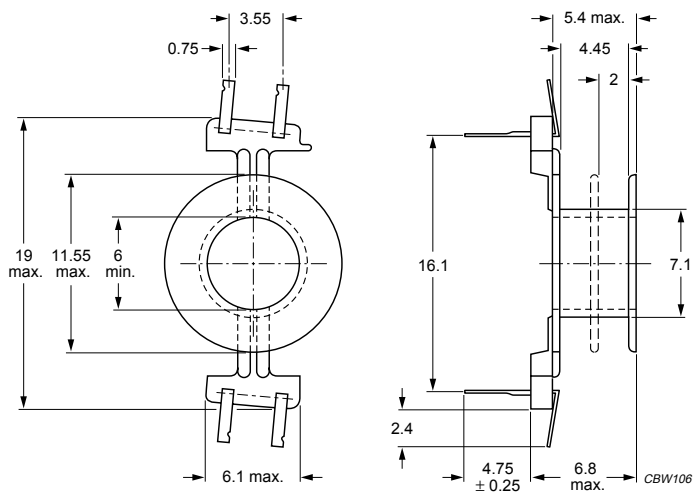

Dimensions in mm.

Fig.5 P14/8 coil former for PCB mounting; 4-pins.

Winding data and area product for 4-pins P14/8 coil former for PCB mounting

NUMBER OF SECTIONS	MINIMUM WINDING AREA (mm^2)	NOMINAL WINDING WIDTH (mm)	AVERAGE LENGTH OF TURN (mm)	LENGTH OF PINS (mm)	AREA PRODUCT Ae x Aw (mm^4)	TYPE NUMBER
1	8.65	4.4	29.0	4.75	217	CPV-P14/8-1S-4SPD
1	8.65	4.4	29.0	6.8	217	CPV-P14/8-1S-4SPDL
2	2×3.87	2×2.0	29.0	4.75	2 x 97.1	CPV-P14/8-2S-4SPD
2	2×3.87	2×2.0	29.0	6.8	2 x 97.1	CPV-P14/8-2S-4SPDL

General data 6-pins P14/8 coil former for PCB mounting

PARAMETER	SPECIFICATION
Coil former material	polyamide (PA6.6), glass reinforced, flame retardant in accordance with *"UL 94V-0"*; UL file number E41938(M)
Maximum operating temperature	130 °C, *"IEC 60085"* , class B
Pin material	copper-zinc alloy (CuZn), tin (Sn) plated
Resistance to soldering heat	*"IEC 60068-2-20"*, Part 2, Test Tb, method 1B, 350 °C, 3.5 s
Solderability	*"IEC 60068-2-20"*, Part 2, Test Ta, method 1, 235 °C, 2 s

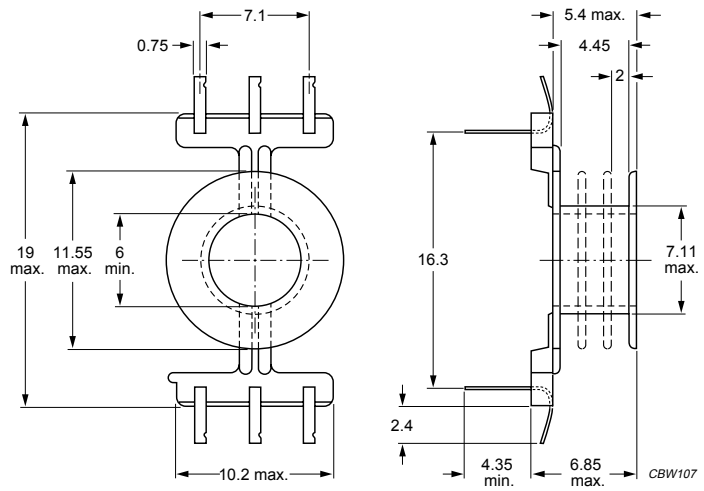

Dimensions in mm.

Fig.6 P14/8 coil former for PCB mounting; 6-pins.

Winding data and area product for 6-pins P14/8 coil former for PCB mounting

NUMBER OF SECTIONS	MINIMUM WINDING AREA (mm^2)	NOMINAL WINDING WIDTH (mm)	AVERAGE LENGTH OF TURN (mm)	LENGTH OF PINS (mm)	AREA PRODUCT Ae x Aw (mm^4)	TYPE NUMBER
1	8.65	4.4	29.0	4.4	217	CPV-P14/8-1S-6PD
1	8.65	4.4	29.0	6.8	217	CPV-P14/8-1S-6PDL
2	2×3.87	2×2.0	29.0	4.4	2 x 97.1	CPV-P14/8-2S-6PD
2	2×3.87	2×2.0	29.0	6.8	2 x 97.1	CPV-P14/8-2S-6PDL

MOUNTING PARTS

General data for mounting parts

ITEM	REMARKS	FIGURE	TYPE NUMBER
Tag plate	material: phenolformaldehyde (PF), glass reinforced	7	TGP-P14/8-C
	flame retardant: in accordance with *"UL 94V-0"*; UL file number E41429		
	maximum operating temperature: 180 °C, *"IEC 60085"*, class H		
	pins: copper-tin alloy (CuSn), tin (Sn) plated		
	resistance to soldering heat in accordance with *"IEC 60068-2-20"*, Part 2, Test Tb, method 1B: 350 °C, 3.5 s		
	solderability in accordance with *"IEC 60068-2-20"*, Part 2, Test Ta, method 1: 235 °C, 2 s		
Container	copper-zinc alloy (CuZn), tin (Sn) plated	8	CON-P14/8
	earth pins: presoldered		
Spring	CrNi-steel	9	SPR-P14/8
	spring force: ≈60 N when mounted		
Clamp	spring steel, tin-plated	10	CLM/TP-P14/8
Washer	phenolformaldehyde (PF)	11	WAS-CLM/TP-P14/8

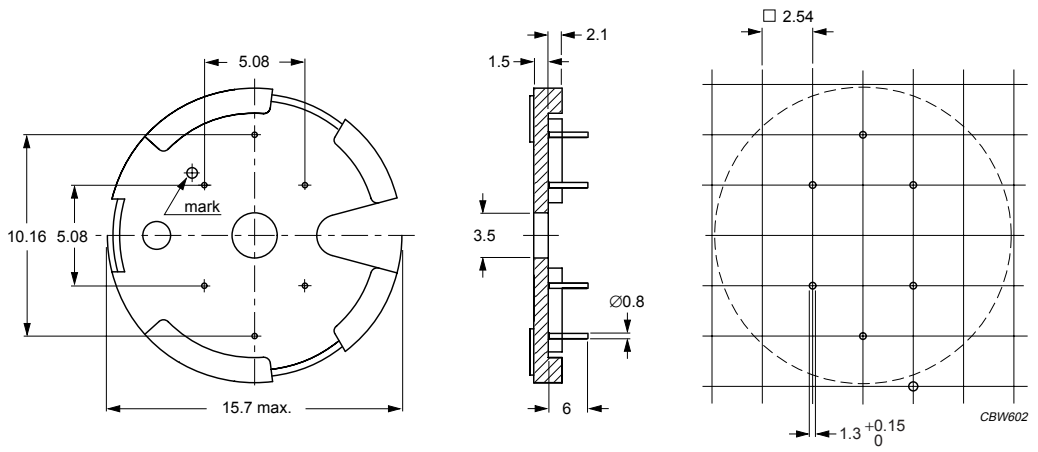

Dimensions in mm.

Fig.7 Tag plate: TGP-P14/8-C.

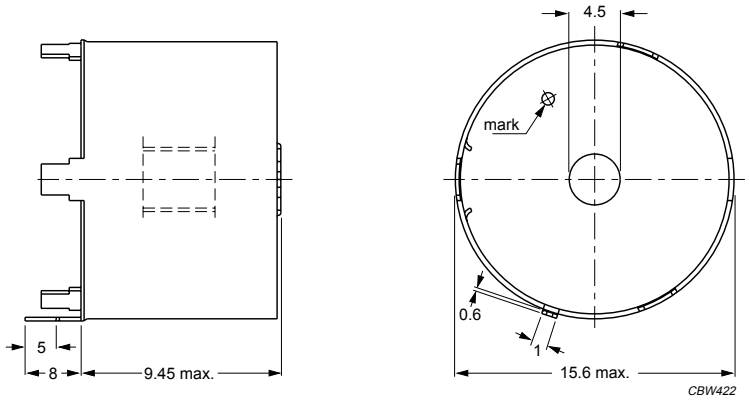

Dimensions in mm.

Fig.8 Container: CON-P14/8.

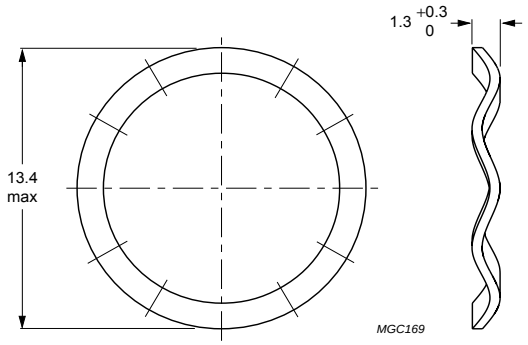

Dimensions in mm.

Fig.9 Spring: SPR-P14/8.

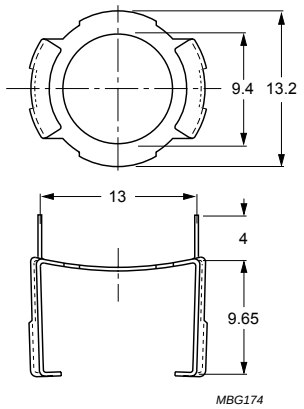

Dimensions in mm.

Fig.10 Clamp: CLM/TP-P14/8.

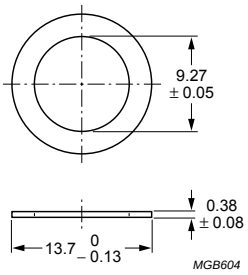

Dimensions in mm.

Fig.11 Washer: WAS-CLM/TP-P14/8.

CORE SETS

Effective core parameters

SYMBOL	PARAMETER	VALUE	UNIT
$\Sigma(l/A)$	core factor (C1)	0.700	mm^{-1}
V_e	effective volume	628	mm^3
l_e	effective length	21.0	mm
A_e	effective area	29.9	mm^2
A_{min}	minimum area	23.6	mm^2
m	mass of set	≈ 3.5	g

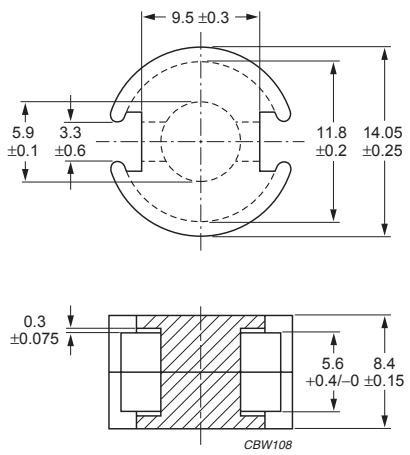

Dimensions in mm.

Fig.1 P14/8/I core set.

Core sets for general purpose transformers and power applications

Clamping force for A_L measurements, 15 ±5 N.

GRADE	A_L (nH)	μ_e	AIR GAP (μm)	TYPE NUMBER
3C81	100 ±3%	≈ 56	≈ 470	P14/8/I-3C81-A100
	160 ±3%	≈ 89	≈ 270	P14/8/I-3C81-A160
	250 ±3%	≈ 140	≈ 160	P14/8/I-3C81-A250
	315 ±5%	≈ 176	≈ 120	P14/8/I-3C81-A315
	400 ±5%	≈ 224	≈ 95	P14/8/I-3C81-A400
	2900 ±25%	≈ 1620	≈ 0	P14/8/I-3C81
3C91 des	2900 ±25%	≈ 1620	≈ 0	P14/8/I-3C91
3F3	100 ±3%	≈ 56	≈ 470	P14/8/I-3F3-A100
	160 ±3%	≈ 89	≈ 270	P14/8/I-3F3-A160
	250 ±3%	≈ 140	≈ 160	P14/8/I-3F3-A250
	315 ±5%	≈ 176	≈ 120	P14/8/I-3F3-A315
	400 ±5%	≈ 224	≈ 95	P14/8/I-3F3-A400
	2400 ±25%	≈ 1340	≈ 0	P14/8/I-3F3

Properties of core sets under power conditions

GRADE	B (mT) at	CORE LOSS (W) at			
	H = 250 A/m; f = 25 kHz; T = 100 °C	f = 25 kHz; $\hat{B}$ = 200 mT; T = 100 °C	f = 100 kHz; $\hat{B}$ = 100 mT; T = 100 °C	f = 100 kHz; $\hat{B}$ = 200 mT; T = 100 °C	f = 400 kHz; $\hat{B}$ = 50 mT; T = 100 °C
3C81	≥320	≤ 0.15	–	–	–
3C91	≥315	–	≤ 0.032(1)	≤ 0.24(1)	–
3F3	≥315	–	≤ 0.07	–	≤ 0.12

Note

1. Measured at 60 °C.

BOBBINS AND ACCESSORIES

Coil formers, winding data and mounting parts are equal to those of *"P14/8"*, but *"area product"* is different.

Winding data and area product (for P14/8/I) for CP-P14/8 coil former

NUMBER OF SECTIONS	WINDING AREA (mm^2)	MINIMUM WINDING WIDTH (mm)	AVERAGE LENGTH OF TURN (mm)	AREA PRODUCT Ae x Aw (mm^4)	TYPE NUMBER
1	8.8	4.1	28.9	263	CP-P14/8-1S
2	2 × 4.0	2 × 1.85	28.9	2 x 120	CP-P14/8-2S

Winding data and area product (for P14/8/I) for CP-P14/8-A coil former

NUMBER OF SECTIONS	MINIMUM WINDING AREA (mm^2)	NOMINAL WINDING WIDTH (mm)	AVERAGE LENGTH OF TURN (mm)	AREA PRODUCT Ae x Aw (mm^4)	TYPE NUMBER
1	9.4	4.5	29.0	281	CP-P14/8-1S-A
2	2 x 4.32	2 x 2.0	29.0	2 x 129	CP-P14/8-2S-A
3	3 × 2.19	3 × 1.2	29.0	3 x 65.5	CP-P14/8-3S-A

Winding data and area product (for P14/8/I) for 4-pins P14/8 coil former for PCB mounting

NUMBER OF SECTIONS	MINIMUM WINDING AREA (mm^2)	NOMINAL WINDING WIDTH (mm)	AVERAGE LENGTH OF TURN (mm)	LENGTH OF PINS (mm)	AREA PRODUCT Ae x Aw (mm^4)	TYPE NUMBER
1	8.65	4.4	29.0	4.4	259	CPV-P14/8-1S-4SPD
1	8.65	4.4	29.0	6.8	259	CPV-P14/8-1S-4SPDL
2	2 × 3.87	2 × 2.0	29.0	4.4	2 x 116	CPV-P14/8-2S-4SPD
2	2 × 3.87	2 × 2.0	29.0	6.8	2 x 116	CPV-P14/8-2S-4SPDL

Winding data and area product (for P14/8/I) for 6-pins P14/8 coil former for PCB mounting

NUMBER OF SECTIONS	MINIMUM WINDING AREA (mm^2)	NOMINAL WINDING WIDTH (mm)	AVERAGE LENGTH OF TURN (mm)	LENGTH OF PINS (mm)	AREA PRODUCT Ae x Aw (mm^4)	TYPE NUMBER
1	8.65	4.4	29.0	4.4	259	CPV-P14/8-1S-6PD
1	8.65	4.4	29.0	6.8	259	CPV-P14/8-1S-6PDL
2	2×3.87	2×2.0	29.0	4.4	2 x 116	CPV-P14/8-2S-6PD
2	2×3.87	2×2.0	29.0	6.8	2 x 116	CPV-P14/8-2S-6PDL

CORE SETS

Effective core parameters

SYMBOL	PARAMETER	VALUE	UNIT
Σ(l/A)	core factor (C1)	0.597	mm^{-1}
V_e	effective volume	1120	mm^3
l_e	effective length	25.8	mm
A_e	effective area	43.3	mm^2
A_{min}	minimum area	36.0	mm^2
m	mass of set	≈6.0	g

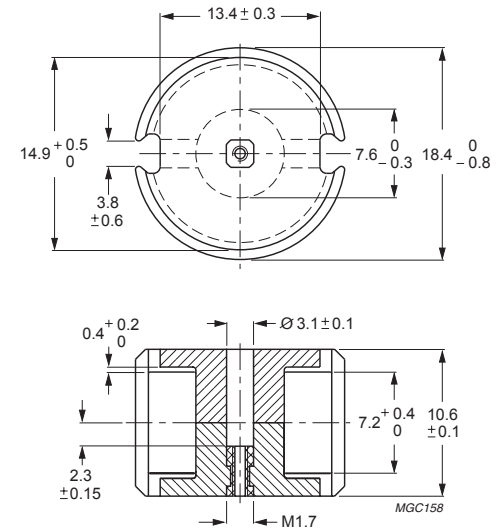

Dimensions in mm.

Fig.1 P18/11 core set.

Core sets for filter applications

Clamping force for A_L measurements, 80 ±20 N.

GRADE	A_L (nH)	μ_e	TOTAL AIR GAP (μm)	TYPE NUMBER (WITH NUT)	TYPE NUMBER (WITHOUT NUT)
3D3 sup	63 ±3%	≈ 30	≈ 1210	P18/11-3D3-E63/N	P18/11-3D3-E63
	100 ±3%	≈ 47	≈ 670	P18/11-3D3-E100/N	P18/11-3D3-E100
	160 ±3%	≈ 76	≈ 370	P18/11-3D3-E160/N	P18/11-3D3-E160
	1400 ±25%	≈ 665	≈ 0	–	P18/11-3D3
3H3 sup	160 ±3%	≈ 76	≈ 400	P18/11-3H3-E160/N	P18/11-3H3-E160
	250 ±3%	≈ 119	≈ 240	P18/11-3H3-A250/N	P18/11-3H3-A250
	315 ±3%	≈ 149	≈ 180	P18/11-3H3-A315/N	P18/11-3H3-A315
	400 ±3%	≈ 190	≈ 140	P18/11-3H3-A400/N	P18/11-3H3-A400
	630 ±5%	≈ 299	≈ 80	P18/11-3H3-A630/N	P18/11-3H3-A630
	3100 ±25%	≈ 1470	≈ 0	–	P18/11-3H3

Core sets for general purpose transformers and power applications

Clamping force for A_L measurements, 80 ±20 N.

GRADE	A_L (nH)	μ_e	AIR GAP (μm)	TYPE NUMBER
3C81	100 ±3%	≈ 47	≈ 710	P18/11-3C81-E100
	160 ±3%	≈ 76	≈ 400	P18/11-3C81-A160
	250 ±3%	≈ 119	≈ 240	P18/11-3C81-A250
	315 ±3%	≈ 149	≈ 180	P18/11-3C81-A315
	400 ±3%	≈ 190	≈ 140	P18/11-3C81-A400
	4000 ±25%	≈ 1900	≈ 0	P18/11-3C81
3C91 des	4000 ±25%	≈ 1900	≈ 0	P18/11-3C91
3F3	100 ±3%	≈ 47	≈ 710	P18/11-3F3-E100
	160 ±3%	≈ 76	≈ 400	P18/11-3F3-A160
	250 ±3%	≈ 119	≈ 240	P18/11-3F3-A250
	315 ±3%	≈ 149	≈ 180	P18/11-3F3-A315
	400 ±3%	≈ 190	≈ 140	P18/11-3F3-A400
	2850 ±25%	≈ 1350	≈ 0	P18/11-3F3

Core sets of high permeability grades

Clamping force for A_L measurements, 60 ±20 N.

GRADE	A_L (nH)	μ_e	AIR GAP (μm)	TYPE NUMBER
3E27	7500 ±25%	≈ 3560	≈ 0	P18/11-3E27

Properties of core sets under power conditions

GRADE	B (mT) at	CORE LOSS (W) at			
	H = 250 A/m; f = 25 kHz; T = 100 °C	f = 25 kHz; $\hat{B}$ = 200 mT; T = 100 °C	f = 100 kHz; $\hat{B}$ = 100 mT; T = 100 °C	f = 100 kHz; $\hat{B}$ = 200 mT; T = 100 °C	f = 400 kHz; $\hat{B}$ = 50 mT; T = 100 °C
3C81	≥320	≤ 0.26	–	–	–
3C91	≥315	–	≤ 0.07[1]	≤ 0.45[1]	–
3F3	≥315	–	≤ 0.13	–	≤ 0.22

Note

1. Measured at 60 °C.

INDUCTANCE ADJUSTERS

General data

ITEM	SPECIFICATION
Material of head and thread	polypropylene (PP), glass fibre reinforced
Maximum operating temperature	125 °C

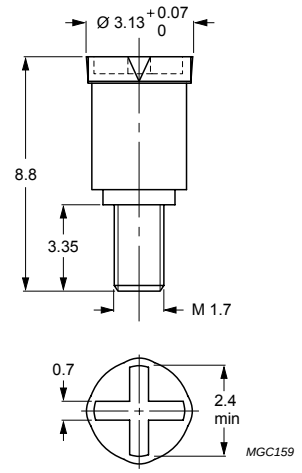

Dimensions in mm.

Fig.2 P18/11 inductance adjuster.

Inductance adjuster selection chart sup (applies to all types)

GRADE	A_L (nH)	TYPES FOR LOW ADJUSTMENT	ΔL/L(1)	types for medium adjustment	ΔL/L(1)	TYPES FOR HIGH ADJUSTMENT	ΔL/L(1)
3H3	63	–	–	ADJ-P18-YELLOW	16	–	–
	100	–	–	–	–	ADJ-P18-BROWN	42
	160	ADJ-P18-YELLOW	9	ADJ-P18-RED	18	ADJ-P18-BROWN	28
	250	ADJ-P18-RED	11	ADJ-P18-WHITE	14	ADJ-P18-BROWN	18
	315	ADJ-P18-RED	8	ADJ-P18-BROWN	14	ADJ-P18-VIOLET	20
	400	ADJ-P18-WHITE	8	ADJ-P18-VIOLET	16	–	–
	630	ADJ-P18-VIOLET	8	–	–	–	–
	1000	ADJ-P18-VIOLET	5	–	–	–	–
	1250	–	–	–	–	–	–
3D3	40	–	–	–	–	ADJ-P18-YELLOW	19
	63	–	–	ADJ-P18-YELLOW	17	–	–
	100	–	–	–	–	ADJ-P18-RED	26
	160	–	–	ADJ-P18-RED	15	–	–

Note

1. Maximum adjustment range.

COIL FORMERS

General data CP-P18/11

PARAMETER	SPECIFICATION
Coil former material	polybutyleneterephtalate (PBT), glass reinforced, flame retardant in accordance with *"UL 94V-0"*; UL file number E45329 (R)
Maximum operating temperature	155 °C, *"IEC 60085"*, class F

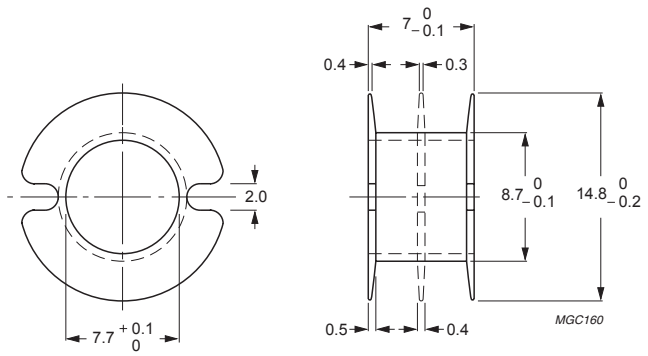

Dimensions in mm.

Fig.3 CP-P18/11 coil former.

Winding data and area product for CP-P18/11 coil former

NUMBER OF SECTIONS	WINDING AREA (mm^2)	MINIMUM WINDING WIDTH (mm)	AVERAGE LENGTH OF TURN (mm)	AREA PRODUCT Ae x Aw (mm^4)	TYPE NUMBER
1	17.1	5.7	36.6	740	CP-P18/11-1S
2	2×7.95	2×2.65	36.6	2 x 344	CP-P18/11-2S
3	3×4.95	3×1.6	36.6	3 x 214	CP-P18/11-3S

General data 6-pins P18/11 coil former for PCB mounting

PARAMETER	SPECIFICATION
Coil former material	polyamide (PA6.6), glass reinforced, flame retardant in accordance with *"UL 94V-0"*; UL file number E41938(M)
Maximum operating temperature	130 °C, *"IEC 60085"*, class B
Pin material	copper-zinc alloy (CuZn), tin (Sn) plated
Resistance to soldering heat	*"IEC 60068-2-20"*, Part 2, Test Tb, method 1B, 350 °C, 3.5 s
Solderability	*"IEC 60068-2-20"*, Part 2, Test Ta, method 1, 235 °C, 2 s

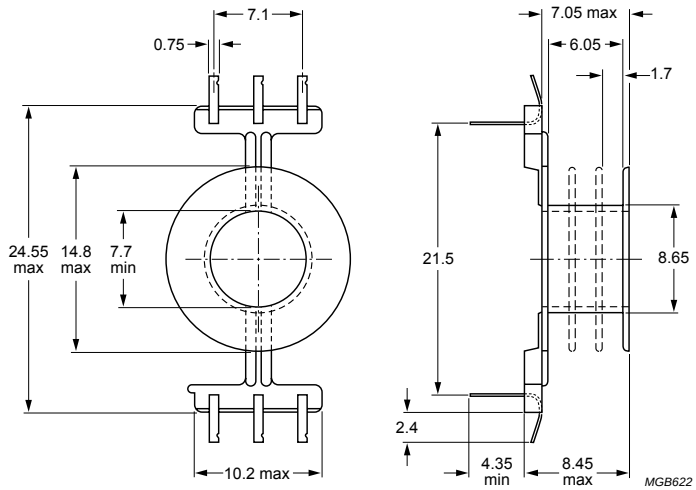

Dimensions in mm.

Fig.4 P18/11 coil former for PCB mounting; 6-pins.

Winding data and area product for 6-pins P18/11 coil former for PCB mounting

NUMBER OF SECTIONS	MINIMUM WINDING AREA (mm^2)	NOMINAL WINDING WIDTH (mm)	AVERAGE LENGTH OF TURN (mm)	LENGTH OF PINS (mm)	AREA PRODUCT Ae x Aw (mm^4)	TYPE NUMBER
1	16.8	6.0	36.7	4.4	727	CPV-P18/11-1S-6PD
1	16.8	6.0	36.7	6.8	727	CPV-P18/11-1S-6PDL
2	2×7.61	2×2.8	36.7	4.4	2 x 330	CPV-P18/11-2S-6PD
2	2×7.61	2×2.8	36.7	6.8	2 x 330	CPV-P18/11-2S-6PDL
3	3×4.58	3×1.7	36.7	4.4	3 x 198	CPV-P18/11-3S-6PD
3	3×4.58	3×1.7	36.7	6.8	3 x 198	CPV-P18/11-3S-6PDL

MOUNTING PARTS

General data for mounting parts

ITEM	REMARKS	FIGURE	TYPE NUMBER
Tag plate	material: phenolformaldehyde (PF), glass reinforced	5	TGP-P18/11-C
	flame retardant: in accordance with *"UL 94V-0"*; UL file number E41429		
	maximum operating temperature: 180 °C, *"IEC 60085"*, class H		
	pins: copper-tin alloy (CuSn), tin (Sn) plated		
	resistance to soldering heat in accordance with *"IEC 60068-2-20"*, Part 2, Test Tb, method 1B: 350 °C, 3.5 s		
	solderability in accordance with *"IEC 60068-2-20"*, Part 2, Test Ta, method 1: 235 °C, 2 s		
Container	copper-zinc alloy (CuZn), tin (Sn) plated	6	CON-P18/11
	earth pins: presoldered		
Spring	CrNi-steel	7	SPR-P18/11
	spring force: ≈100 N when mounted		
Clamp	spring steel, tin-plated	8	CLM/TP-P18/11
Washer	phenolformaldehyde (PF)	9	WAS-CLM/TP-P18/11

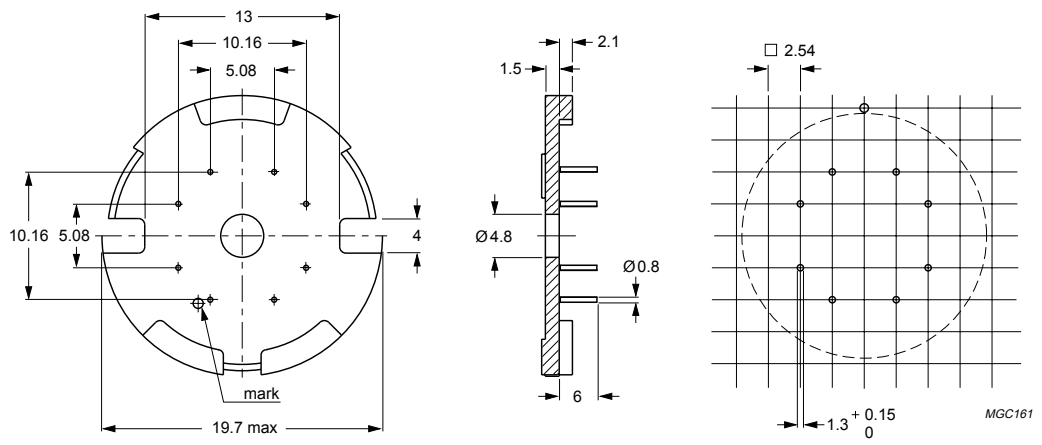

Dimensions in mm.

Fig.5 Tag plate: TGP-P18/11-C.

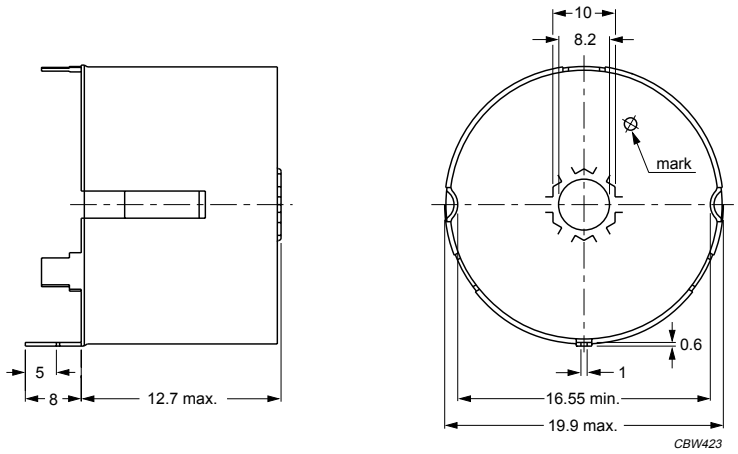

Dimensions in mm.

Fig.6 Container: CON-P18/11.

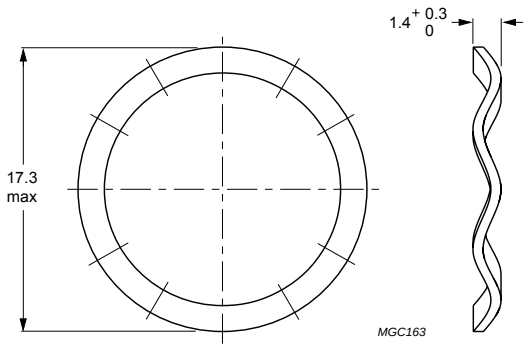

Dimensions in mm.

Fig.7 Spring: SPR-P18/11.

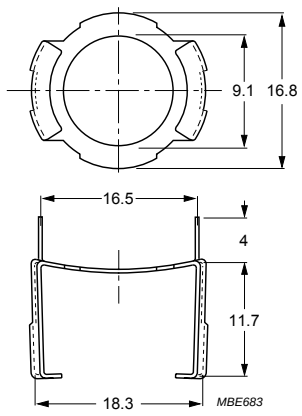

Dimensions in mm.

Fig.8 Clamp: CLM/TP-P18/11.

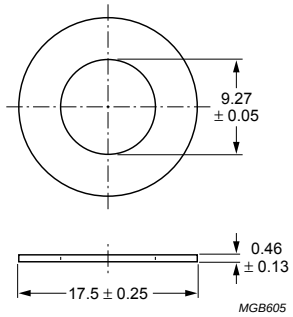

Dimensions in mm.

Fig.9 Washer: WAS-CLM/TP-P18/11.

CORE SETS

Effective core parameters

SYMBOL	PARAMETER	VALUE	UNIT
$\Sigma(l/A)$	core factor (C1)	0.560	mm^{-1}
V_e	effective volume	1270	mm^3
l_e	effective length	26.7	mm
A_e	effective area	47.5	mm^2
A_{min}	minimum area	37.5	mm^2
m	mass of set	≈ 7	g

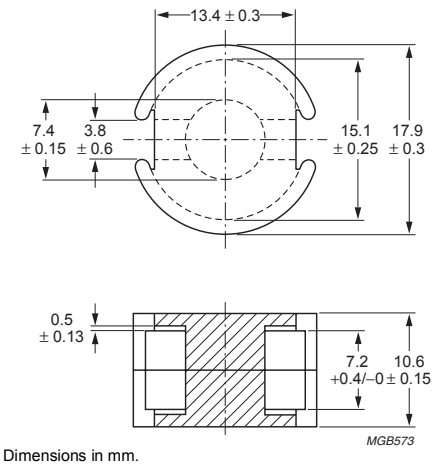

Dimensions in mm.

Fig.1 P18/11/I core set.

Core sets for general purpose transformers and power applications

Clamping force for A_L measurements, 30 ±10 N.

GRADE	A_L (nH)	μ_e	AIR GAP (μm)	TYPE NUMBER
3C81	160 ±3%	≈ 72	≈ 450	P18/11/I-3C81-A160
	250 ±3%	≈ 112	≈ 260	P18/11/I-3C81-A250
	315 ±3%	≈ 141	≈ 200	P18/11/I-3C81-A315
	400 ±3%	≈ 179	≈ 150	P18/11/I-3C81-A400
	630 ±5%	≈ 282	≈ 90	P18/11/I-3C81-A630
	4200 ±25%	≈ 1880	≈ 0	P18/11/I-3C81
3C91 des	4200 ±25%	≈ 1880	≈ 0	P18/11/I-3C91
3F3	160 ±3%	≈ 72	≈ 450	P18/11/I-3F3-A160
	250 ±3%	≈ 112	≈ 260	P18/11/I-3F3-A250
	315 ±3%	≈ 141	≈ 200	P18/11/I-3F3-A315
	400 ±3%	≈ 179	≈ 150	P18/11/I-3F3-A400
	630 ±5%	≈ 282	≈ 90	P18/11/I-3F3-A630
	3110 ±25%	≈ 1390	≈ 0	P18/11/I-3F3

Properties of core sets under power conditions

GRADE	B (mT) at	CORE LOSS (W) at			
	H = 250 A/m; f = 25 kHz; T = 100 °C	f = 25 kHz; $\hat{B}$ = 200 mT; T = 100 °C	f = 100 kHz; $\hat{B}$ = 100 mT; T = 100 °C	f = 100 kHz; $\hat{B}$ = 200 mT; T = 100 °C	f = 400 kHz; $\hat{B}$ = 50 mT; T = 100 °C
3C81	≥320	≤ 0.3	–	–	–
3C91	≥315	–	≤ 0.08(1)	≤ 0.5(1)	–
3F3	≥315	–	≤ 0.14	–	≤ 0.24

Note

1. Measured at 60 °C.

BOBBINS AND ACCESSORIES

Coil formers, winding data and mounting parts are equal to those of *"P18/11"*, but *"area product"* is different.

Winding data and area product (for P18/11/I) for CP-P18/11 coil former

NUMBER OF SECTIONS	WINDING AREA (mm^2)	MINIMUM WINDING WIDTH (mm)	AVERAGE LENGTH OF TURN (mm)	AREA PRODUCT Ae x Aw (mm^4)	TYPE NUMBER
1	17.1	5.7	36.6	812	CP-P18/11-1S
2	2 × 7.95	2 × 2.65	36.6	2 x 378	CP-P18/11-2S
3	3 × 4.95	3 × 1.6	36.6	3 x 235	CP-P18/11-3S

Winding data and area product (for P18/11/I) for 6-pins P18/11 coil former for PCB mounting

NUMBER OF SECTIONS	MINIMUM WINDING AREA (mm^2)	NOMINAL WINDING WIDTH (mm)	AVERAGE LENGTH OF TURN (mm)	LENGTH OF PINS (mm)	AREA PRODUCT Ae x Aw (mm^4)	TYPE NUMBER
1	16.8	6.0	36.7	4.4	798	CPV-P18/11-1S-6PD
1	16.8	6.0	36.7	6.8	798	CPV-P18/11-1S-6PDL
2	2 × 7.61	2 × 2.8	36.7	4.4	2 x 361	CPV-P18/11-2S-6PD
2	2 × 7.61	2 × 2.8	36.7	6.8	2 x 361	CPV-P18/11-2S-6PDL
3	3 × 4.58	3 × 1.7	36.7	4.4	3 x 218	CPV-P18/11-3S-6PD
3	3 × 4.58	3 × 1.7	36.7	6.8	3 x 218	CPV-P18/11-3S-6PDL

CORE SETS

Effective core parameters

SYMBOL	PARAMETER	VALUE	UNIT
Σ(l/A)	core factor (C1)	0.497	mm^{-1}
V_e	effective volume	2000	mm^3
l_e	effective length	31.5	mm
A_e	effective area	63.4	mm^2
A_{min}	minimum area	50.9	mm^2
m	mass of set	≈ 12	g

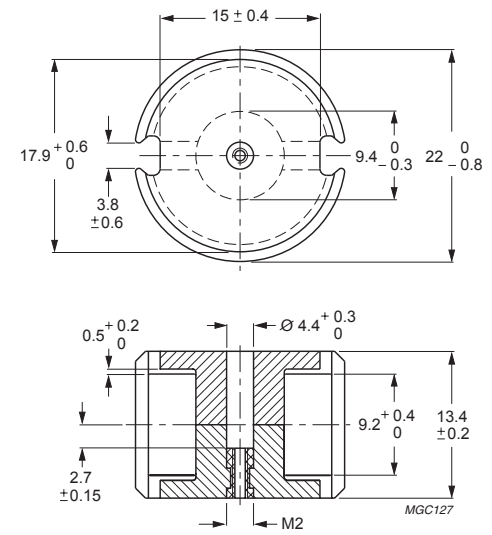

Dimensions in mm.

Fig.1 P22/13 core set.

Core sets for filter applications

Clamping force for A_L measurements, 140 ±30 N.

GRADE	A_L (nH)	μ_e	TOTAL AIR GAP (μm)	TYPE NUMBER (WITH NUT)	TYPE NUMBER (WITHOUT NUT)
3D3 sup	40 ±3%	≈ 16	≈ 3360	P22/13-3D3-E40/N	P22/13-3D3-E40
	63 ±3%	≈ 25	≈ 1890	P22/13-3D3-E63/N	P22/13-3D3-E63
	100 ±3%	≈ 40	≈ 1040	P22/13-3D3-E100/N	P22/13-3D3-E100
	160 ±3%	≈ 63	≈ 570	P22/13-3D3-E160/N	P22/13-3D3-E160
	1700 ±25%	≈ 670	≈ 0	–	P22/13-3D3
3H3 sup	160 ±3%	≈ 64	≈ 610	P22/13-3H3-E160/N	P22/13-3H3-E160
	250 ±3%	≈ 100	≈ 360	P22/13-3H3-E250/N	P22/13-3H3-E250
	315 ±3%	≈ 125	≈ 270	P22/13-3H3-E315/N	P22/13-3H3-E315
	400 ±3%	≈ 158	≈ 210	P22/13-3H3-A400/N	P22/13-3H3-A400
	630 ±3%	≈ 249	≈ 120	P22/13-3H3-A630/N	P22/13-3H3-A630
	3900 ±25%	≈ 1540	≈ 0	–	P22/13-3H3

Core sets for general purpose transformers and power applications

Clamping force for A_L measurements, 140 ±30 N.

GRADE	A_L (nH)	μ_e	AIR GAP (μm)	TYPE NUMBER
3C81	160 ±3%	≈ 63	≈ 610	P22/13-3C81-A160
	250 ±3%	≈ 99	≈ 360	P22/13-3C81-A250
	315 ±3%	≈ 125	≈ 280	P22/13-3C81-A315
	400 ±3%	≈ 158	≈ 210	P22/13-3C81-A400
	630 ±3%	≈ 249	≈ 120	P22/13-3C81-A630
	5200 ±25%	≈ 2060	≈ 0	P22/13-3C81
3C91 des	5200 ±25%	≈ 2060	≈ 0	P22/13-3C91
3F3	160 ±3%	≈ 63	≈ 610	P22/13-3F3-A160
	250 ±3%	≈ 99	≈ 360	P22/13-3F3-A250
	315 ±3%	≈ 125	≈ 280	P22/13-3F3-A315
	400 ±3%	≈ 158	≈ 210	P22/13-3F3-A400
	630 ±3%	≈ 249	≈ 120	P22/13-3F3-A630
	3550 ±25%	≈ 1410	≈ 0	P22/13-3F3

Core sets of high permeability grades

Clamping force for A_L measurements, 140 ± 30 N.

GRADE	A_L (nH)	μ_e	AIR GAP (μm)	TYPE NUMBER
3E27	9250 ±25%	≈ 3660	≈ 0	P22/13-3E27

Properties of core sets under power conditions

GRADE	B (mT) at	CORE LOSS (W) at			
	H = 250 A/m; f = 25 kHz; T = 100 °C	f = 25 kHz; $\hat{B}$ = 200 mT; T = 100 °C	f = 100 kHz; $\hat{B}$ = 100 mT; T = 100 °C	f = 100 kHz; $\hat{B}$ = 200 mT; T = 100 °C	f = 400 kHz; $\hat{B}$ = 50 mT; T = 100 °C
3C81	≥320	≤ 0.46	–	–	–
3C91	≥315	–	≤ 0.12(1)	≤ 0.9(1)	–
3F3	≥315	–	≤ 0.22	–	≤ 0.4

Note

1. Measured at 60 °C.

INDUCTANCE ADJUSTERS

General data

PARAMETER	SPECIFICATION
Material of head and thread	polypropylene (PP), glass fibre reinforced
Maximum operating temperature	125 °C

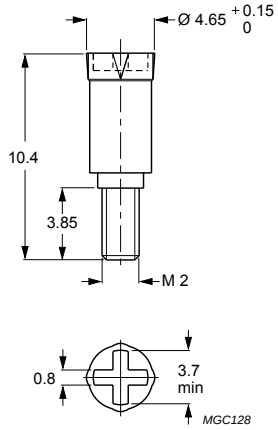

Dimensions in mm.

Fig.2 P22/13 inductance adjuster.

Inductance adjuster selection chart sup (applies to all types)

GRADE	A_L (nH)	TYPES FOR LOW ADJUSTMENT	ΔL/L (1)	TYPES FOR MEDIUM ADJUSTMENT	ΔL/L (1)	TYPES FOR HIGH ADJUSTMENT	ΔL/L (1)
3H3	100	–	–	ADJ-P22/RM8-RED	16	ADJ-P22/RM8-ORANGE	21
	160	ADJ-P22/RM8-RED	11	ADJ-P22/RM8-ORANGE	17	ADJ-P22/RM8-WHITE	27
	250	ADJ-P22/RM8-ORANGE	10	ADJ-P22/RM8-WHITE	18	–	–
	315	ADJ-P22/RM8-ORANGE	7	–	–	ADJ-P22/RM8-BROWN	22
	400	ADJ-P22/RM8-WHITE	11	ADJ-P22/RM8-BROWN	17	ADJ-P22/RM8-BLACK	30
	630	ADJ-P22/RM8-BROWN	10	ADJ-P22/RM8-BLACK	18	–	–
	1000	ADJ-P22/RM8-BROWN	6	ADJ-P22/RM8-BLACK	12	–	–
	1250	ADJ-P22/RM8-BROWN	4	ADJ-P22/RM8-BLACK	7	–	–
3D3	40	–	–	–	–	ADJ-P22/RM8-ORANGE	27
	63	–	–	–	–	ADJ-P22/RM8-ORANGE	26
	100	–	–	ADJ-P22/RM8-RED	16	ADJ-P22/RM8-ORANGE	23
	160	ADJ-P22/RM8-RED	10	ADJ-P22/RM8-ORANGE	15	–	–

Note

1. Maximum adjustment range.

COIL FORMERS

General data CP-P22/13 coil former

PARAMETER	SPECIFICATION
Coil former material	polybutyleneterephtalate (PBT), glass reinforced, flame retardant in accordance with *"UL 94V-0"*; UL file number E45329 (R)
Maximum operating temperature	155 °C, *"IEC 60085"*, class F

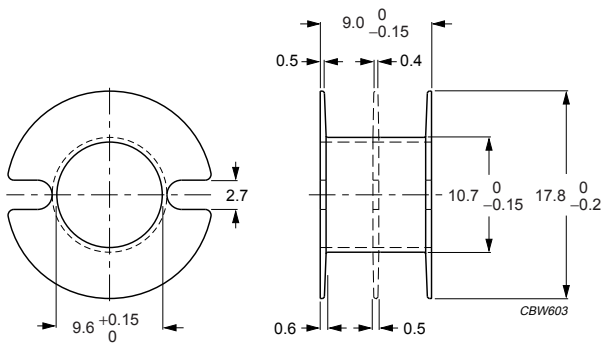

Dimensions in mm.

Fig.3 Coil former: CP-P22/13.

Winding data and area product for CP-P22/13 coil former

NUMBER OF SECTIONS	MINIMUM WINDING AREA (mm^2)	NOMINAL WINDING WIDTH (mm)	AVERAGE LENGTH OF TURN (mm)	AREA PRODUCT Ae x Aw (mm^4)	TYPE NUMBER
1	26.2	7.5	44.5	1660	CP-P22/13-1S
2	2×12.2	2×3.45	44.5	2 x 773	CP-P22/13-2S
3	3×7.6	3×2.1	44.5	3 x 482	CP-P22/13-3S

General data 6-pins P22/13 coil former for PCB mounting

PARAMETER	SPECIFICATION
Coil former material	polyamide (PA6.6), glass reinforced, flame retardant in accordance with *"UL 94V-0"*; UL file number E41938(M)
Maximum operating temperature	130 °C, *"IEC 60085"*, class B
Pin material	copper-zinc alloy (CuZn), tin (Sn) plated
Resistance to soldering heat	*"IEC 60068-2-20"*, Part 2, Test Tb, method 1B, 350 °C, 3.5 s
Solderability	*"IEC 60068-2-20"*, Part 2, Test Ta, method 1, 235 °C, 2 s

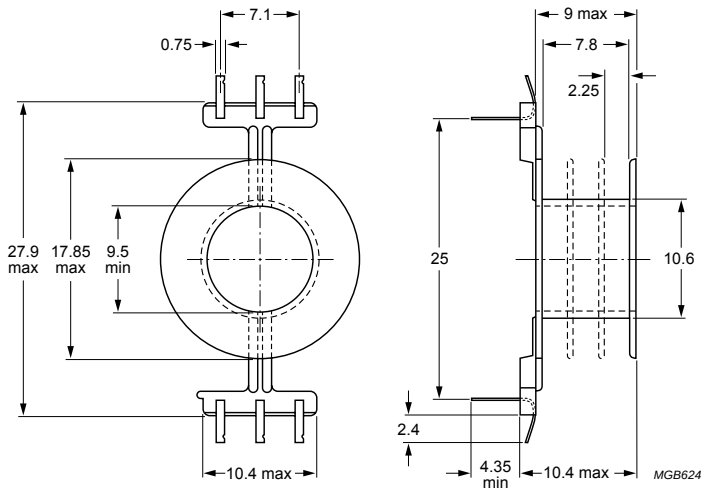

Dimensions in mm.

Fig.4 P22/13 coil former for PCB mounting; 6-pins.

Winding data and area product for 6-pins P22/13 coil former for PCB mounting

NUMBER OF SECTIONS	MINIMUM WINDING AREA (mm^2)	NOMINAL WINDING WIDTH (mm)	AVERAGE LENGTH OF TURN (mm)	MINIMUM LENGTH OF PINS (mm)	AREA PRODUCT Ae x Aw (mm^4)	TYPE NUMBER
1	25.2	7.8	44.5	4.4	1600	CPV-P22/13-1S-6PD
1	25.2	7.8	44.5	6.8	1600	CPV-P22/13-1S-6PDL
2	2×11.7	2×3.6	44.5	4.4	2 x 742	CPV-P22/13-2S-6PD
2	2×11.7	2×3.6	44.5	6.8	2 x 742	CPV-P22/13-2S-6PDL
3	3×7.03	3×2.2	44.5	4.4	3 x446	CPV-P22/13-3S-6PD[1]
3	3×7.03	3×2.2	44.5	6.8	3 x 446	CPV-P22/13-3S-6PDL[1]

Note

1. In accordance with *"UL 94-HB"*.

MOUNTING PARTS

General data and ordering information

ITEM	REMARKS	FIGURE	TYPE NUMBER
Tag plate	material: phenolformaldehyde (PF), glass reinforced	5	TGP-P22/13-C
	flame retardant: in accordance with *"UL 94V-0"*; UL file number E41429		
	maximum operating temperature: 180 °C, *"IEC 60085"*, class H		
	pins: copper-tin alloy (CuSn), tin (Sn) plated		
	resistance to soldering heat in accordance with *"IEC 60068-2-20"*, Part 2, Test Tb, method 1B: 350 °C, 3.5 s		
	solderability in accordance with *"IEC 60068-2-20"*, Part 2, Test Ta, method 1: 235 °C, 2 s		
Container	copper-zinc alloy (CuZn), tin (Sn) plated	6	CON-P22/13
	earth pins: presoldered		
Spring	CrNi-steel	7	SPR-P22/13
	spring force: ≈140 N when mounted		
Clamp	spring steel, tin-plated	8	CLM/TS-P22/13
Washer	phenolformaldehyde (PF)	9	WAS-CLM/TS-P22/13

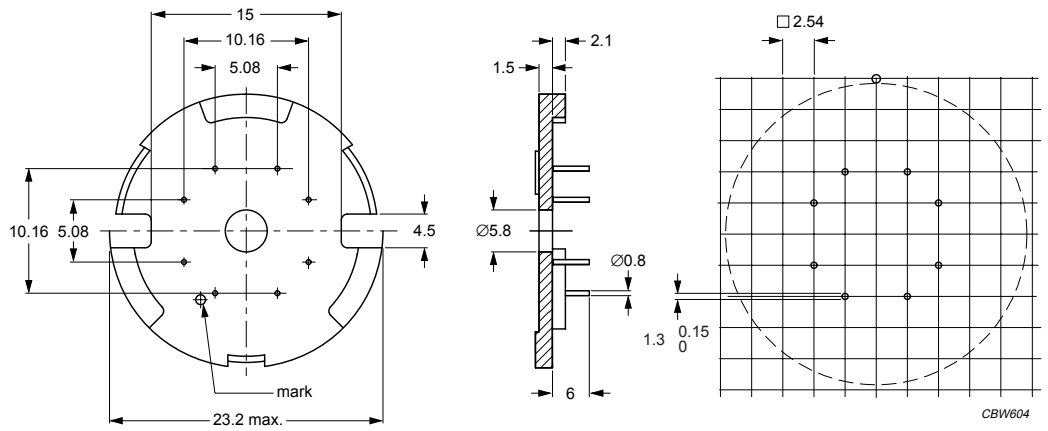

Dimensions in mm.

Fig.5 Tag plate: TGP-P22/13-C.

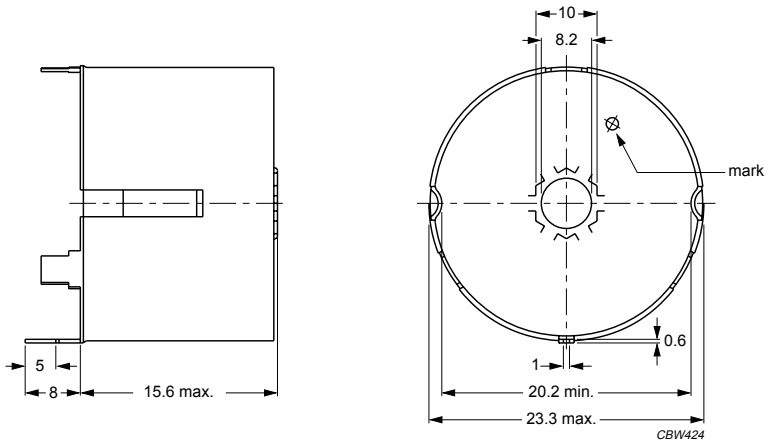

Dimensions in mm.

Fig.6 Container: CON-P22/13.

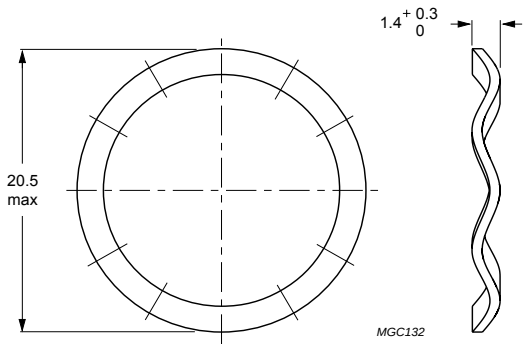

Dimensions in mm.

Fig.7 Spring: SPR-P22/13.

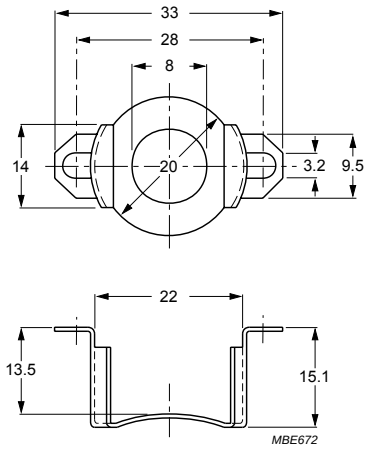

Dimensions in mm.

Fig.8 Clamp: CLM/S-P22/13.

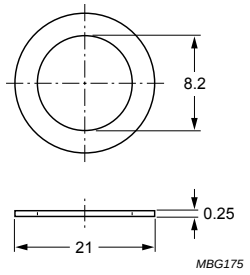

Dimensions in mm.

Fig.9 Washer: WAS-CLM/TS-P22/13.

CORE SETS

Effective core parameters

SYMBOL	PARAMETER	VALUE	UNIT
Σ(l/A)	core factor (C1)	0.450	mm^{-1}
V_e	effective volume	2460	mm^3
l_e	effective length	33.3	mm
A_e	effective area	73.4	mm^2
A_{min}	minimum area	58.1	mm^2
m	mass of set	≈ 13	g

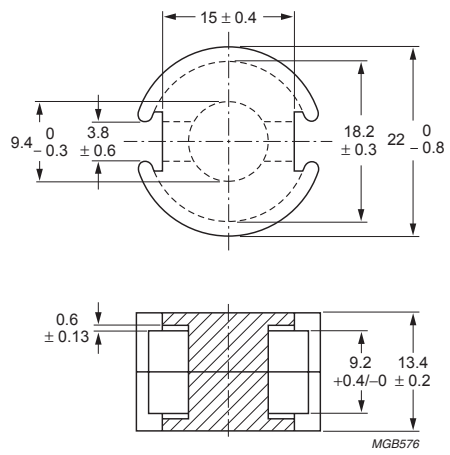

Dimensions in mm.

Fig.1 P22/13/I core set.

Core sets for general purpose transformers and power applications

Clamping force for A_L measurements, 40 ±10 N.

GRADE	A_L (nH)	μ_e	AIR GAP (μm)	TYPE NUMBER
3C81	250 ±3%	≈ 90	≈ 420	P22/13/I-3C81-A250
	315 ±3%	≈ 114	≈ 320	P22/13/I-3C81-A315
	400 ±3%	≈ 144	≈ 250	P22/13/I-3C81-A400
	630 ±3%	≈ 227	≈ 145	P22/13/I-3C81-A630
	1000 ±5%	≈ 361	≈ 85	P22/13/I-3C81-A1000
	5330 ±25%	≈ 1920	≈ 0	P22/13/I-3C81
3C91 des	5330 ±25%	≈ 1920	≈ 0	P22/13/I-3C91
3F3	250 ±3%	≈ 90	≈ 420	P22/13/I-3F3-A250
	315 ±3%	≈ 114	≈ 320	P22/13/I-3F3-A315
	400 ±3%	≈ 144	≈ 250	P22/13/I-3F3-A400
	630 ±3%	≈ 227	≈ 145	P22/13/I-3F3-A630
	1000 ±5%	≈ 361	≈ 85	P22/13/I-3F3-A1000
	4070 ±25%	≈ 1470	≈ 0	P22/13/I-3F3

Properties of core sets under power conditions

GRADE	B (mT) at	CORE LOSS (W) at			
	H = 250 A/m; f = 25 kHz; T = 100 °C	f = 25 kHz; $\hat{B}$ = 200 mT; T = 100 °C	f = 100 kHz; $\hat{B}$ = 100 mT; T = 100 °C	f = 100 kHz; $\hat{B}$ = 200 mT; T = 100 °C	f = 400 kHz; $\hat{B}$ = 50 mT; T = 100 °C
3C81	≥320	≤ 0.57	–	–	–
3C91	≥315	–	≤ 0.13[1]	≤ 0.92[1]	–
3F3	≥315	–	≤ 0.27	–	≤ 0.47

Note

1. Measured at 60 °C.

BOBBINS AND ACCESSORIES

Coil formers, winding data and mounting parts are equal to those of *"P22/13"*, but *"area product"* is different.

Winding data and area product (for P22/13/I) for CP-P22/13 coil former

NUMBER OF SECTIONS	MINIMUM WINDING AREA (mm^2)	NOMINAL WINDING WIDTH (mm)	AVERAGE LENGTH OF TURN (mm)	AREA PRODUCT Ae x Aw (mm^4)	TYPE NUMBER
1	26.2	7.5	44.5	1920	CP-P22/13-1S
2	2 × 12.2	2 × 3.45	44.5	2 x 895	CP-P22/13-2S
3	3 × 7.6	3 × 2.1	44.5	3 x 558	CP-P22/13-3S

Winding data and area product (for P22/13/I) for 6-pins P22/13 coil former for PCB mounting

NUMBER OF SECTIONS	MINIMUM WINDING AREA (mm^2)	NOMINAL WINDING WIDTH (mm)	AVERAGE LENGTH OF TURN (mm)	MINIMUM LENGTH OF PINS (mm)	AREA PRODUCT Ae x Aw (mm^4)	TYPE NUMBER
1	25.2	7.8	44.5	4.4	1850	CPV-P22/13-1S-6PD
1	25.2	7.8	44.5	6.8	1850	CPV-P22/13-1S-6PDL
2	2 × 11.7	2 × 3.6	44.5	4.4	2 x 859	CPV-P22/13-2S-6PD
2	2 × 11.7	2 × 3.6	44.5	6.8	2 x 859	CPV-P22/13-2S-6PDL
3	3 × 7.03	3 × 2.2	44.5	4.4	3 x 516	CPV-P22/13-3S-6PD[1]
3	3 × 7.03	3 × 2.2	44.5	6.8	3 x 516	CPV-P22/13-3S-6PDL[1]

Note

1. In accordance with *"UL 94-HB"*.

CORE SETS

Effective core parameters

SYMBOL	PARAMETER	VALUE	UNIT
Σ(l/A)	core factor (C1)	0.400	mm^{-1}
V_e	effective volume	3530	mm^3
l_e	effective length	37.6	mm
A_e	effective area	93.9	mm^2
A_{min}	minimum area	77.4	mm^2
m	mass of set	≈20	g

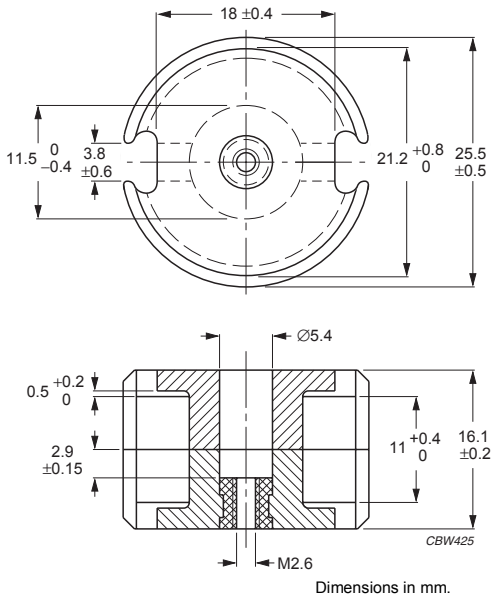

Fig.1 P26/16 core set.

Core sets for filter applications

Clamping force for A_L measurements, 200 ±50 N.

GRADE	A_L (nH)	μ_e	TOTAL AIR GAP (μm)	TYPE NUMBER (WITH NUT)	TYPE NUMBER (WITHOUT NUT)
3D3 sup	100 ±3%	≈ 32	≈ 1630	P26/16-3D3-E100/N	P26/16-3D3-E100
	160 ±3%	≈ 51	≈ 890	P26/16-3D3-E160/N	P26/16-3D3-E160
	250 ±3%	≈ 80	≈ 510	P26/16-3D3-E250/N	P26/16-3D3-E250
	2150 ±25%	≈ 685	≈ 0	–	P26/16-3D3
3H3 sup	160 ±3%	≈ 51	≈ 940	P26/16-3H3-E160/N	P26/16-3H3-E160
	250 ±3%	≈ 80	≈ 550	P26/16-3H3-E250/N	P26/16-3H3-E250
	315 ±3%	≈ 100	≈ 420	P26/16-3H3-E315/N	P26/16-3H3-E315
	400 ±3%	≈ 127	≈ 310	P26/16-3H3-E400/N	P26/16-3H3-E400
	630 ±3%	≈ 201	≈ 180	P26/16-3H3-A630/N	P26/16-3H3-A630
	5000 ±25%	≈ 1590	≈ 0	–	P26/16-3H3

Core sets for general purpose transformers and power applications

Clamping force for A_L measurements, 200 ±50 N.

GRADE	A_L (nH)	μ_e	AIR GAP (μm)	TYPE NUMBER
3C81	160 ±3%	≈ 51	≈ 950	P26/16-3C81-E160
	250 ±3%	≈ 80	≈ 560	P26/16-3C81-A250
	315 ±3%	≈ 100	≈ 420	P26/16-3C81-A315
	400 ±3%	≈ 127	≈ 320	P26/16-3C81-A400
	630 ±3%	≈ 200	≈ 190	P26/16-3C81-A630
	6700 ±25%	≈ 2130	≈ 0	P26/16-3C81
3C91 des	6700 ±25%	≈ 2130	≈ 0	P26/16-3C91
3F3	160 ±3%	≈ 51	≈ 950	P26/16-3F3-E160
	250 ±3%	≈ 80	≈ 560	P26/16-3F3-A250
	315 ±3%	≈ 100	≈ 420	P26/16-3F3-A315
	400 ±3%	≈ 127	≈ 320	P26/16-3F3-A400
	630 ±3%	≈ 200	≈ 190	P26/16-3F3-A630
	4600 ±25%	≈ 1470	≈ 0	P26/16-3F3

Core sets of high permeability grades

Clamping force for A_L measurements, 200 ± 50 N.

GRADE	A_L (nH)	μ_e	AIR GAP (μm)	TYPE NUMBER
3E27	12000 ±25%	≈ 3820	≈ 0	P26/16-3E27

Properties of core sets under power conditions

GRADE	B (mT) at	CORE LOSS (W) at			
	H = 250 A/m; f = 25 kHz; T = 100 °C	f = 25 kHz; $\hat{B}$ = 200 mT; T = 100 °C	f = 100 kHz; $\hat{B}$ = 100 mT; T = 100 °C	f = 100 kHz; $\hat{B}$ = 200 mT; T = 100 °C	f = 400 kHz; $\hat{B}$ = 50 mT; T = 100 °C
3C81	≥320	≤ 0.82	–	–	–
3C91	≥315	–	≤ 0.21[1]	≤ 1.6[1]	–
3F3	≥315	–	≤ 0.4	–	≤ 0.65

Note

1. Measured at 60 °C.

INDUCTANCE ADJUSTERS

General data

PARAMETER	SPECIFICATION
Material of head and thread	polypropylene (PP), glass fibre reinforced
Maximum operating temperature	125 °C

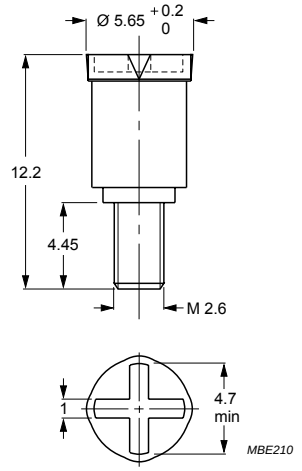

Dimensions in mm.

Fig.2 P26/16 inductance adjuster.

Inductance adjuster selection chart sup **(applies to all types)**

GRADE	A_L (nH)	TYPES FOR LOW ADJUSTMENT	$\Delta L/L$ (1)	TYPES FOR MEDIUM ADJUSTMENT	$\Delta L/L$ (1)	TYPES FOR HIGH ADJUSTMENT	$\Delta L/L$ (1)
3H3	63	–	–	–	–	ADJ-P26-RED	25
	100	–	–	–	–	ADJ-P26-RED	22
	160	–	–	ADJ-P26-RED	15	–	–
	250	ADJ-P26-RED	10	–	–	ADJ-P26-BROWN	23
	315	ADJ-P26-RED	8	–	–	ADJ-P26-BROWN	18
	400	ADJ-P26-RED	6	ADJ-P26-BROWN	13	ADJ-P26-GREY	25
	630	ADJ-P26-BROWN	8	ADJ-P26-GREY	16	–	–
	1000	ADJ-P26-BROWN	5	ADJ-P26-GREY	9	–	–
	1600	–	–	ADJ-P26-GREY	5	–	–
3D3	100	–	–	–	–	ADJ-P26-RED	21
	160	–	–	ADJ-P26-RED	14	–	–
	250	ADJ-P26-RED	9	–	–	ADJ-P26-GREY	35
	400	–	8	ADJ-P26-GREY	17	–	–

Note

1. Maximum adjustment range.

COIL FORMERS

General data for CP-P26/16 coil former

PARAMETER	SPECIFICATION
Coil former material	polybutyleneterephtalate (PBT), glass reinforced, flame retardant in accordance with *"UL 94V-0"*; UL file number E45329 (R)
Maximum operating temperature	155 °C, *"IEC 60085"*, class F

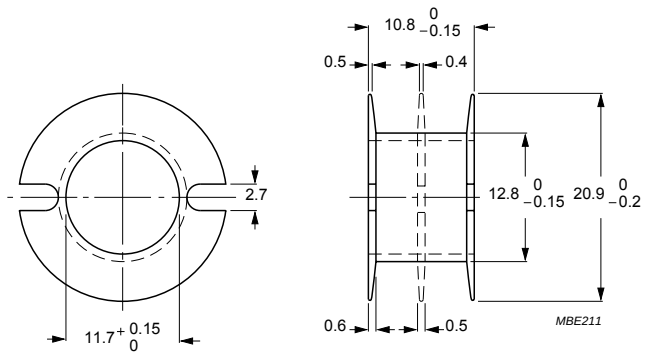

Dimensions in mm.

Fig.3 Coil former CP-P26/16.

Winding data and area product for CP-P26/16 coil former

NUMBER OF SECTIONS	WINDING AREA (mm^2)	MINIMUM WINDING WIDTH (mm)	AVERAGE LENGTH OF TURN (mm)	AREA PRODUCT Ae x Aw (mm^4)	TYPE NUMBER
1	37.1	9.3	52.6	3480	CP-P26/16-1S
2	2×17.5	2×4.35	52.6	2 x 1640	CP-P26/16-2S
3	3×11	3×2.7	52.6	3 x 1030	CP-P26/16-3S

General data 6-pins P26/16 coil former for PCB mounting

PARAMETER	SPECIFICATION
Coil former material	polyamide (PA6.6), glass reinforced, flame retardant in accordance with *"UL 94V-0"*; UL file number E41938(M)
Maximum operating temperature	130 °C, *"IEC 60085"*, class B
Pin material	copper-zinc alloy (CuZn), tin (Sn) plated
Resistance to soldering heat	*"IEC 60068-2-20"*, Part 2, Test Tb, method 1B, 350 °C, 3.5 s
Solderability	*"IEC 60068-2-20"*, Part 2, Test Ta, method 1, 235 °C, 2 s

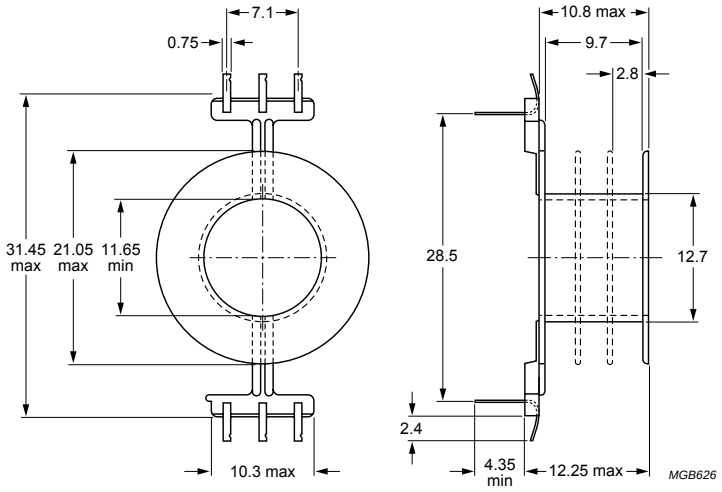

Dimensions in mm.

Fig.4 P26/16 coil former for PCB mounting; 6-pins.

Winding data and area product for 6-pins P26/16 coil former for PCB mounting

NUMBER OF SECTIONS	MINIMUM WINDING AREA (mm^2)	NOMINAL WINDING WIDTH (mm)	AVERAGE LENGTH OF TURN (mm)	MINIMUM LENGTH OF PINS (mm)	AREA PRODUCT Ae x Aw (mm^4)	TYPE NUMBER
1	36.7	9.7	52.7	4.4	3450	CPV-P26/16-1S-6PD
1	36.7	9.7	52.7	6.8	3450	CPV-P26/16-1S-6PDL
2	2×16.6	2×4.5	52.7	4.4	2 x 1560	CPV-P26/16-2S-6PD
2	2×16.6	2×4.5	52.7	6.8	2 x 1560	CPV-P26/16-2S-6PDL
3	3×10.3	3×2.8	52.7	4.4	3 x 967	CPV-P26/16-3S-6PD(1)
3	3×10.3	3×2.8	52.7	6.8	3 x 967	CPV-P26/16-3S-6PDL(1)

Note

1. In accordance with *"UL 94-HB"*.

MOUNTING PARTS

General data

ITEM	REMARKS	FIGURE	TYPE NUMBER
Tag plate	material: phenolformaldehyde (PF), glass reinforced	5	TGP-P26/16-C
	flame retardant: in accordance with *"UL 94V-0"*; UL file number E41429		
	maximum operating temperature: 180 °C, *"IEC 60085"*, class H		
	pins: copper-tin alloy (CuSn), tin (Sn) plated		
	resistance to soldering heat in accordance with *"IEC 60068-2-20"*, Part 2, Test Tb, method 1B: 350 °C, 3.5 s		
	solderability in accordance with *"IEC 60068-2-20"*, Part 2, Test Ta, method 1: 235 °C, 2 s		
Container	copper-zinc alloy, tin (Sn) plated	6	CON-P26/16
	earth pins: presoldered		
Spring	CrNi-steel	7	SPR-P26/16
	spring force: ≈200 N when mounted		
Clamp	spring steel, tin-plated	8	CLM/TP-P26/16

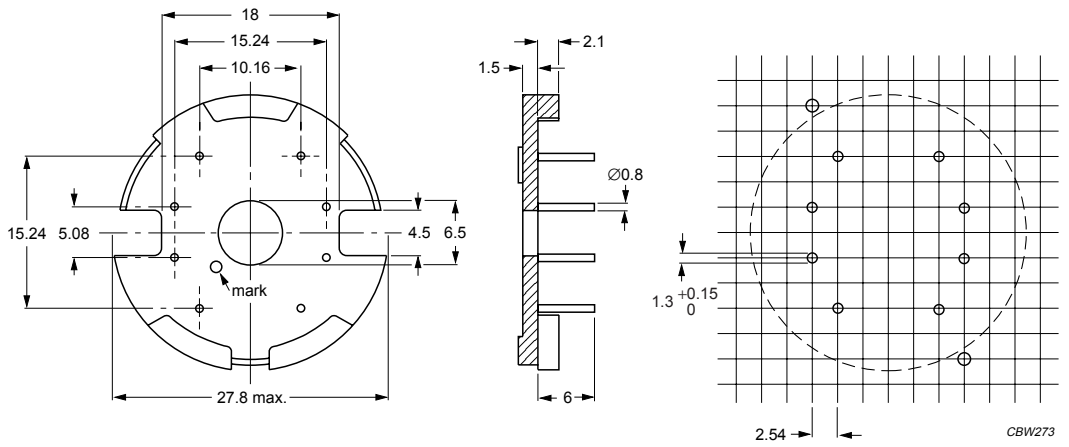

Dimensions in mm.

Fig.5 Tag plate: TGP-P26/16-C.

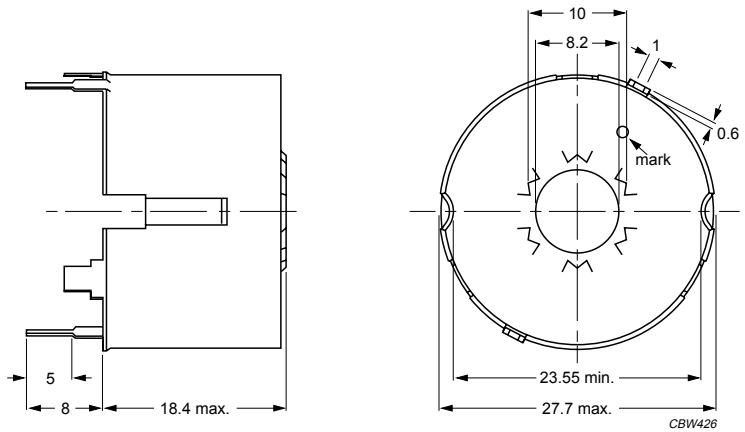

Dimensions in mm.

Fig.6 P26/16 container.

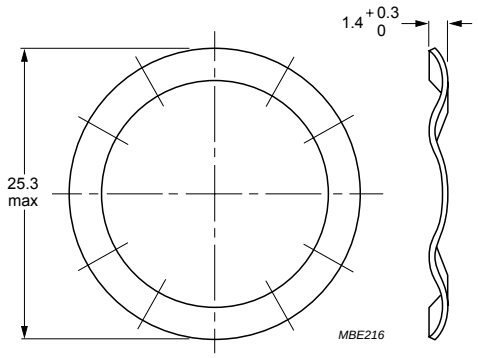

Dimensions in mm.

Fig.7 P26/16 spring.

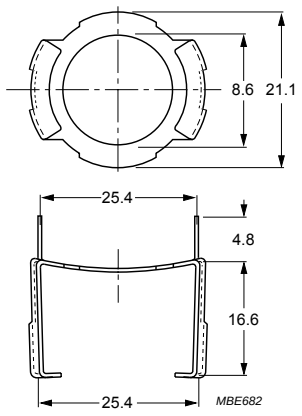

Dimensions in mm.

Fig.8 Clamp: CLM/TP-P26/16.

CORE SETS

Effective core parameters

SYMBOL	PARAMETER	VALUE	UNIT
Σ(l/A)	core factor (C1)	0.360	mm^{-1}
V_e	effective volume	4370	mm^3
l_e	effective length	39.6	mm
A_e	effective area	110	mm^2
A_{min}	minimum area	87.0	mm^2
m	mass of set	≈ 21	g

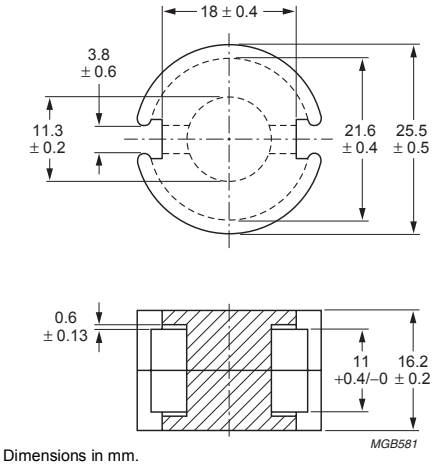

Dimensions in mm.

Fig.1 P26/16/I core set.

Core sets for general purpose transformers and power applications

Clamping force for A_L measurements, 50 ±20 N.

GRADE	A_L (nH)	μ_e	TOTAL AIR GAP (μm)	TYPE NUMBER
3C81	250 ±3%	≈ 72	≈ 660	P26/16/I-3C81-E250
	315 ±3%	≈ 90	≈ 500	P26/16/I-3C81-A315
	400 ±3%	≈ 115	≈ 380	P26/16/I-3C81-A400
	630 ±3%	≈ 180	≈ 230	P26/16/I-3C81-A630
	1000 ±3%	≈ 286	≈ 130	P26/16/I-3C81-A1000
	7000 ±25%	≈ 2010	≈ 0	P26/16/I-3C81
3C91 des	7000 ±25%	≈ 2010	≈ 0	P26/16/I-3C91
3F3	250 ±3%	≈ 72	≈ 660	P26/16/I-3F3-E250
	315 ±3%	≈ 90	≈ 500	P26/16/I-3F3-A315
	400 ±3%	≈ 115	≈ 380	P26/16/I-3F3-A400
	630 ±3%	≈ 180	≈ 230	P26/16/I-3F3-A630
	1000 ±3%	≈ 286	≈ 130	P26/16/I-3F3-A1000
	5250 ±25%	≈ 1505	≈ 0	P26/16/I-3F3

Properties of core sets under power conditions

GRADE	B (mT) at	CORE LOSS (W) at			
	H = 250 A/m; f = 25 kHz; T = 100 °C	f = 25 kHz; $\hat{B}$ = 200 mT; T = 100 °C	f = 100 kHz; $\hat{B}$ = 100 mT; T = 100 °C	f = 100 kHz; $\hat{B}$ = 200 mT; T = 100 °C	f = 400 kHz; $\hat{B}$ = 50 mT; T = 100 °C
3C81	≥320	≤ 1.0	–	–	–
3C91	≥315	–	≤ 0.22(1)	≤ 1.6(1)	–
3F3	≥315	–	≤ 0.48	–	≤ 0.83

Note

1. Measured at 60 °C.

BOBBINS AND ACCESSORIES

Coil formers, winding data and mounting parts are equal to those of *"P26/16"*, but *"area product"* is different.

Winding data and area product (for P26/16/I) for CP-P26/16 coil former

NUMBER OF SECTIONS	WINDING AREA (mm^2)	MINIMUM WINDING WIDTH (mm)	AVERAGE LENGTH OF TURN (mm)	AREA PRODUCT Ae x Aw (mm^4)	TYPE NUMBER
1	37.1	9.3	52.6	4080	CP-P26/16-1S
2	2 × 17.5	2 × 4.35	52.6	2 x 1925	CP-P26/16-2S
3	3 × 11	3 × 2.7	52.6	3 x 1210	CP-P26/16-3S

Winding data and area product (for P26/16/I) for 6-pins P26/16 coil former for PCB mounting

NUMBER OF SECTIONS	MINIMUM WINDING AREA (mm^2)	NOMINAL WINDING WIDTH (mm)	AVERAGE LENGTH OF TURN (mm)	MINIMUM LENGTH OF PINS (mm)	AREA PRODUCT Ae x Aw (mm^4)	TYPE NUMBER
1	36.7	9.7	52.7	4.4	4040	CPV-P26/16-1S-6PD
1	36.7	9.7	52.7	6.8	4040	CPV-P26/16-1S-6PDL
2	2 × 16.6	2 × 4.5	52.7	4.4	2 x 1830	CPV-P26/16-2S-6PD
2	2 × 16.6	2 × 4.5	52.7	6.8	2 x 1830	CPV-P26/16-2S-6PDL
3	3 × 10.3	3 × 2.8	52.7	4.4	3 x 1130	CPV-P26/16-3S-6PD(1)
3	3 × 10.3	3 × 2.8	52.7	6.8	3 x 1130	CPV-P26/16-3S-6PDL(1)

Note

1. In accordance with *"UL 94-HB"*.

CORE SETS

Effective core parameters

SYMBOL	PARAMETER	VALUE	UNIT
Σ(l/A)	core factor (C1)	0.330	mm^{-1}
V_e	effective volume	6190	mm^3
l_e	effective length	45.2	mm
A_e	effective area	137	mm^2
A_{min}	minimum area	116	mm^2
m	mass of set	≈ 34	g

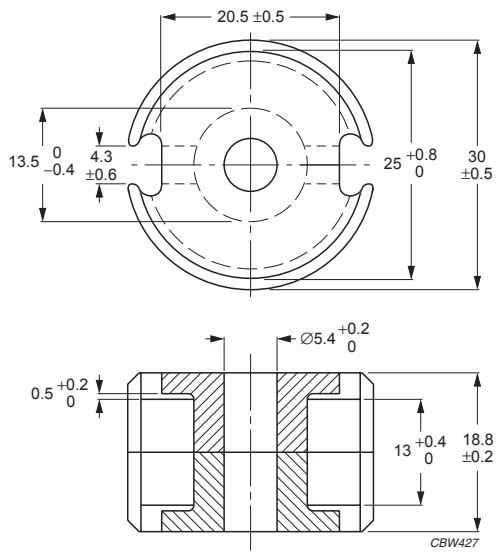

Dimensions in mm.

Fig.1 P30/19 core set.

Core sets for general purpose transformers and power applications

Clamping force for A_L measurements, 250 ±50 N.

GRADE	A_L (nH)	μ_e	TOTAL AIR GAP (μm)	TYPE NUMBER
3C81	250 ±3%	≈ 66	≈ 840	P30/19-3C81-E250
	315 ±3%	≈ 83	≈ 640	P30/19-3C81-A315
	400 ±3%	≈ 105	≈ 480	P30/19-3C81-A400
	630 ±3%	≈ 165	≈ 290	P30/19-3C81-A630
	1000 ±3%	≈ 263	≈ 170	P30/19-3C81-A1000
	8300 ±25%	≈ 2180	≈ 0	P30/19-3C81
3C91 des	8300 ±25%	≈ 2180	≈ 0	P30/19-3C91
3F3	250 ±3%	≈ 66	≈ 840	P30/19-3F3-E250
	315 ±3%	≈ 83	≈ 640	P30/19-3F3-A315
	400 ±3%	≈ 105	≈ 480	P30/19-3F3-A400
	630 ±3%	≈ 165	≈ 290	P30/19-3F3-A630
	1000 ±3%	≈ 263	≈ 170	P30/19-3F3-A1000
	5750 ±25%	≈ 1510	≈ 0	P30/19-3F3

Core sets of high permeability grades

Clamping force for A_L measurements, 250 ± 50 N.

GRADE	A_L (nH)	μ_e	AIR GAP (μm)	TYPE NUMBER
3E27	15100 ±25%	≈ 3960	≈ 0	P30/19-3E27

Properties of core sets under power conditions

GRADE	B (mT) at	CORE LOSS (W) at			
	H = 250 A/m; f = 25 kHz; T = 100 °C	f = 25 kHz; $\hat{B}$ = 200 mT; T = 100 °C	f = 100 kHz; $\hat{B}$ = 100 mT; T = 100 °C	f = 100 kHz; $\hat{B}$ = 200 mT; T = 100 °C	f = 400 kHz; $\hat{B}$ = 50 mT; T = 100 °C
3C81	≥320	≤ 1.43	–	–	–
3C91	≥315	–	≤ 0.37[1]	≤ 2.6[1]	–
3F3	≥315	–	≤ 0.7	–	≤ 1.2

Note

1. Measured at 60 °C.

COIL FORMERS

General data CP-P30/19 coil former

PARAMETER	SPECIFICATION
Coil former material	polybutyleneterephtalate (PBT), glass reinforced, flame retardant in accordance with *"UL 94V-0"*; UL file number E45329 (R)
Maximum operating temperature	155 °C, *"IEC 60085"*, class F

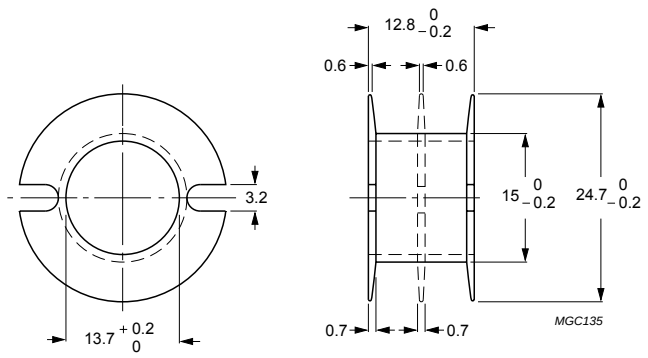

Dimensions in mm.

Fig.2 Coil former: CP-P30/19.

Winding data and area product for P30/19 coil former

NUMBER OF SECTIONS	MINIMUM WINDING AREA (mm^2)	NOMINAL WINDING WIDTH (mm)	AVERAGE LENGTH OF TURN (mm)	AREA PRODUCT Ae x Aw (mm^4)	TYPE NUMBER
1	53.2	11.1	62	7290	CP-P30/19-1S
2	2×24.9	2×5.15	62	2 x 3410	CP-P30/19-2S
3	3×15.5	3×3.2	62	3 x 2120	CP-P30/19-3S

General data 6-pins P30/19 coil former for PCB mounting

PARAMETER	SPECIFICATION
Coil former material	polyamide (PA6.6), glass reinforced, flame retardant in accordance with *"UL 94-HB"*; UL file number E41938(M)
Maximum operating temperature	130 °C, *"IEC 60085"*, class B
Pin material	copper-zinc alloy (CuZn), tin (Sn) plated
Resistance to soldering heat	*"IEC 60068-2-20"*, Part 1, Test Tb, method 1B, 350 °C, 3.5 s. For connection of wire to pins: 430 °C, 2 seconds
Solderability	*"IEC 60068-2-20"*, Part 2, Test Ta, method 1, 235 °C, 2 s

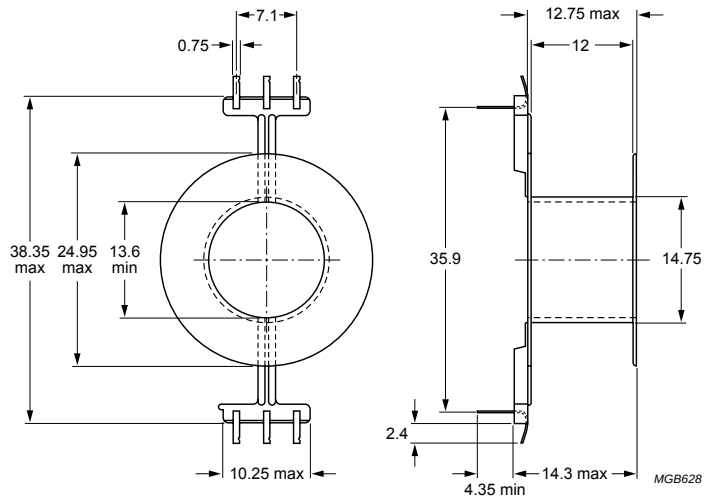

Dimensions in mm.

Fig.3 P30/19 coil former for PCB mounting; 6-pins.

Winding data and area product for 6-pins P30/19 coil former for PCB mounting

NUMBER OF SECTIONS	MINIMUM WINDING AREA (mm^2)	NOMINAL WINDING WIDTH (mm)	AVERAGE LENGTH OF TURN (mm)	MINIMUM LENGTH OF PINS (mm)	AREA PRODUCT Ae x Aw (mm^4)	TYPE NUMBER
1	55.2	12.8	62.2	4.4	7560	CPV-P30/19-1S-6PD
1	55.2	12.8	62.2	6.8	7560	CPV-P30/19-1S-6PDL

MOUNTING PARTS

General data and ordering information

ITEM	REMARKS	FIGURE	TYPE NUMBER
Tag plate	material: phenolformaldehyde (PF), glass reinforced	4	TGP-P30/19-C
	flame retardant: in accordance with *"UL 94V-0"*; UL file number E41429		
	maximum operating temperature: 180 °C, *"IEC 60085"*, class H		
	pins: copper-tin alloy (CuSn), tin (Sn) plated		
	resistance to soldering heat in accordance with *"IEC 60068-2-20"*, Part 2, Test Tb, method 1B: 350 °C, 3.5 s		
	solderability in accordance with *"IEC 60068-2-20"*, Part 2, Test Ta, method 1: 235 °C, 2 s		
Container	copper-zinc alloy (CuZn), tin (Sn) plated	5	CON-P30/19
	earth pins: presoldered		
Spring	CrNi-steel	6	SPR-P30/19
	spring force: ≈250 N when mounted		
Clamp	spring steel, tin-plated	7	CLM/TS-P30/19

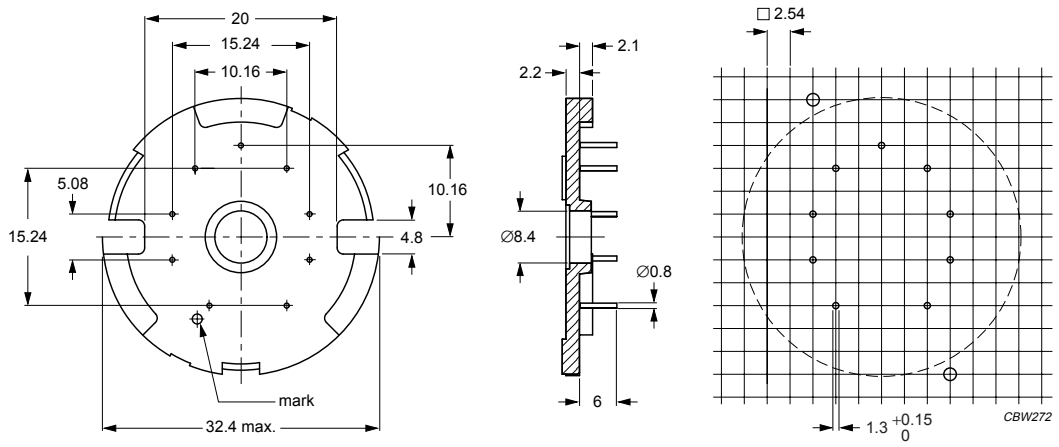

Dimensions in mm.

Fig.4 Tag plate: TGP-P30/19-C.

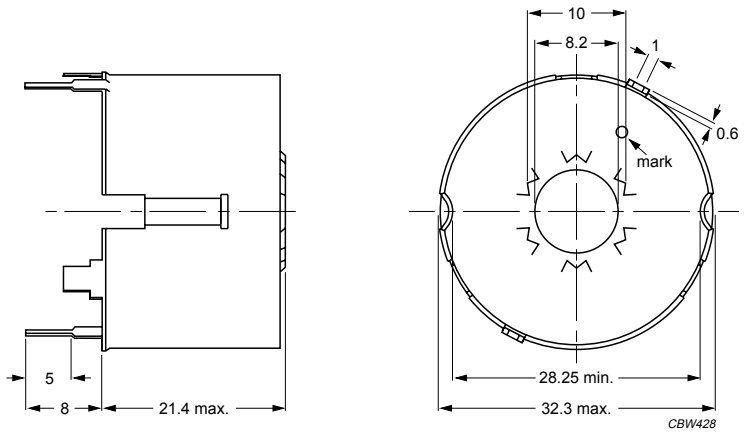

Dimensions in mm.

Fig.5 P30/19 container.

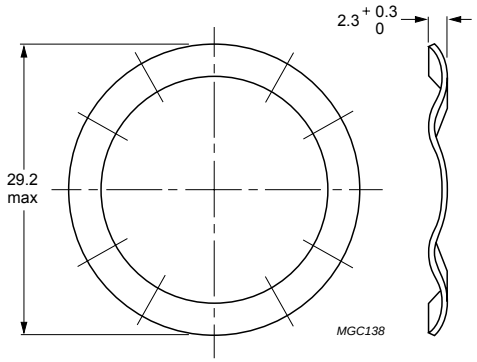

Dimensions in mm.

Fig.6 P30/19 spring.

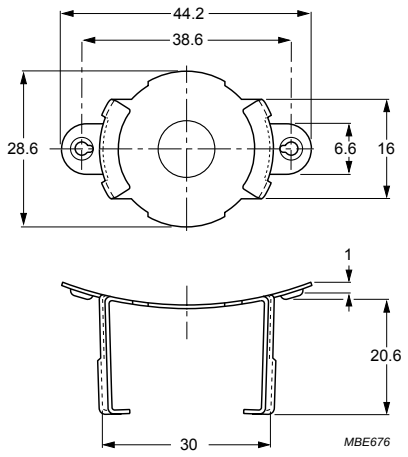

Dimensions in mm.

Fig.7 Clamp CLM/TS-P30/19.

CORE SETS

Effective core parameters

SYMBOL	PARAMETER	VALUE	UNIT
Σ(l/A)	core factor (C1)	0.264	mm^{-1}
V_e	effective volume	10700	mm^3
l_e	effective length	53.2	mm
A_e	effective area	202	mm^2
A_{min}	minimum area	172	mm^2
m	mass of set	≈ 54	g

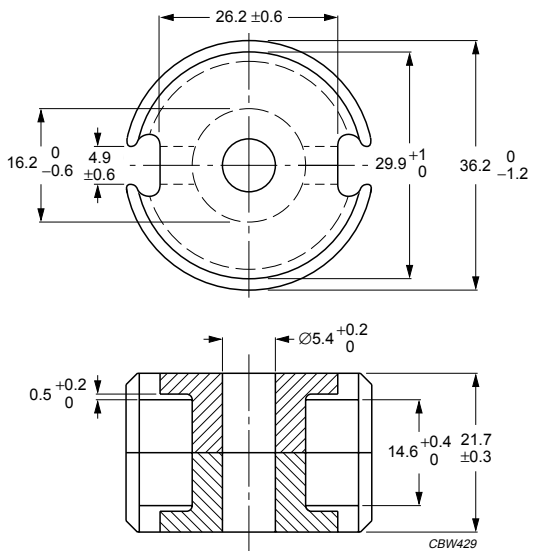

Dimensions in mm.

Fig.1 P36/22 core set.

Core sets for general purpose transformers and power applications

Clamping force for A_L measurements, 350 ±50 N.

GRADE	A_L (nH)	μ_e	TOTAL AIR GAP (μm)	TYPE NUMBER
3C81	315 ±3%	≈ 66	≈ 970	P36/22-3C81-E315
	400 ±3%	≈ 84	≈ 730	P36/22-3C81-E400
	630 ±3%	≈ 132	≈ 430	P36/22-3C81-A630
	1000 ±3%	≈ 210	≈ 250	P36/22-3C81-A1000
	1600 ±5%	≈ 335	≈ 150	P36/22-3C81-A1600
	10800 ±25%	≈ 2260	≈ 0	P36/22-3C81
3C91 des	10800 ±25%	≈ 2260	≈ 0	P36/22-3C91
3F3	250 ±3%	≈ 52	≈ 1340	P36/22-3F3-E250
	315 ±3%	≈ 66	≈ 970	P36/22-3F3-E315
	400 ±3%	≈ 84	≈ 730	P36/22-3F3-E400
	630 ±3%	≈ 132	≈ 430	P36/22-3F3-A630
	1000 ±3%	≈ 210	≈ 250	P36/22-3F3-A1000
	1600 ±5%	≈ 335	≈ 150	P36/22-3F3-A1600
	7350 ±25%	≈ 1540	≈ 0	P36/22-3F3

Core sets of high permeability grades

Clamping force for A_L measurements, 350 ± 50 N.

GRADE	A_L (nH)	μ_e	AIR GAP (μm)	TYPE NUMBER
3E27	17500 ±25%	≈ 3670	≈ 0	P36/22-3E27

Properties of core sets under power conditions

GRADE	B (mT) at	CORE LOSS (W) at			
	H = 250 A/m; f = 25 kHz; T = 100 °C	f = 25 kHz; $\hat{B}$ = 200 mT; T = 100 °C	f = 100 kHz; $\hat{B}$ = 100 mT; T = 100 °C	f = 100 kHz; $\hat{B}$ = 200 mT; T = 100 °C	f = 400 kHz; $\hat{B}$ = 50 mT; T = 100 °C
3C81	≥320	≤ 2.5	–	–	–
3C91	≥315	–	≤ 0.6[1]	≤ 4.5[1]	–
3F3	≥315	–	≤ 1.2	–	≤ 2.0

Note

1. Measured at 60 °C.

COIL FORMERS

General data for coil former CP-P36/22

PARAMETER	SPECIFICATION
Coil former material	polybutyleneterephtalate (PBT), glass reinforced, flame retardant in accordance with *"UL 94V-0"*; UL file number E45329 (R)
Maximum operating temperature	155 °C, *"IEC 60085"*, class F

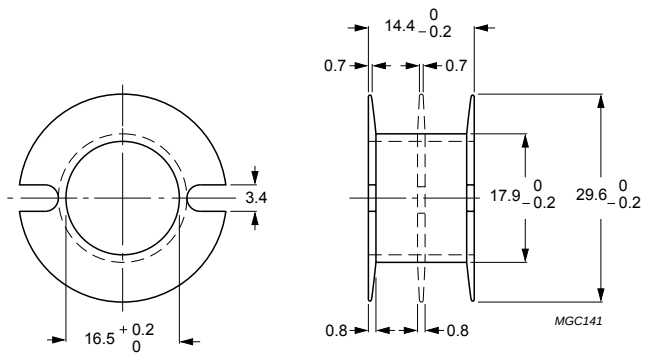

Dimensions in mm.

Fig.2 Coil former CP-P36/22.

Winding data and area product for coil former CP-P36/22

NUMBER OF SECTIONS	WINDING AREA (mm^2)	MINIMUM WINDING WIDTH (mm)	AVERAGE LENGTH OF TURN (mm)	AREA PRODUCT Ae x Aw (mm^4)	TYPE NUMBER
1	72.4	12.5	74.3	14600	CP-P36/22-1S
2	2×33.9	2×5.8	74.3	2 x 6850	CP-P36/22-2S
3	3×21.0	3×3.6	74.3	3 x 4240	CP-P36/22-3S

MOUNTING PARTS

General data and ordering information

ITEM	REMARKS	FIGURE	TYPE NUMBER
Tag plate	material: phenolformaldehyde (PF), glass reinforced	3	TGP-P36/22-C
	flame retardant: in accordance with *"UL 94V-0"*; UL file number E41429		
	maximum operating temperature: 180 °C, *"IEC 60085"*, class H		
	pins: copper-tin alloy (CuSn), tin (Sn) plated		
	resistance to soldering heat in accordance with *"IEC 60068-2-20"*, Part 2, Test Tb, method 1B: 350 °C, 3.5 s		
	solderability in accordance with *"IEC 60068-2-20"*, Part 2, Test Ta, method 1: 235 °C, 2 s		
Container	copper-zinc alloy (CuZn), tin (Sn) plated	4	CON-P36/22
	earth pins: presoldered		
Spring	CrNi-steel	5	SPR-P36/22
	spring force: ≈350 N when mounted		

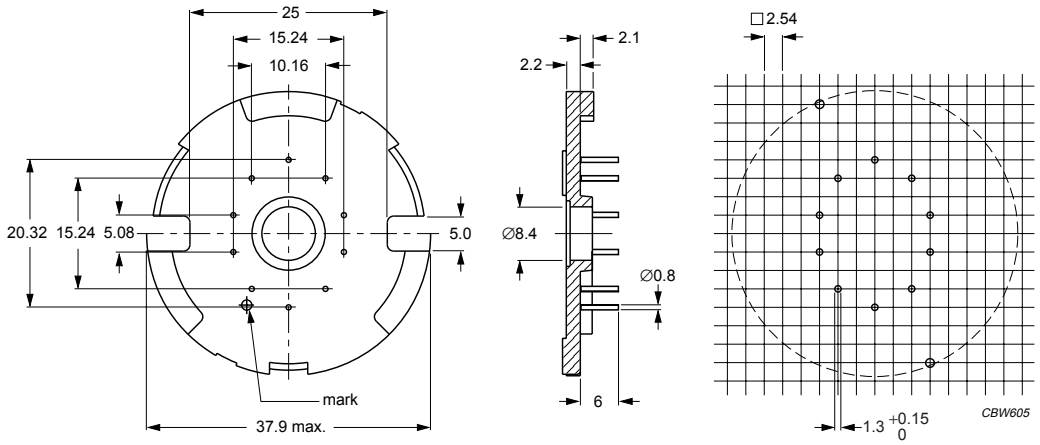

Dimensions in mm.

Fig.3 Tag plate: TGP-P36/22-C.

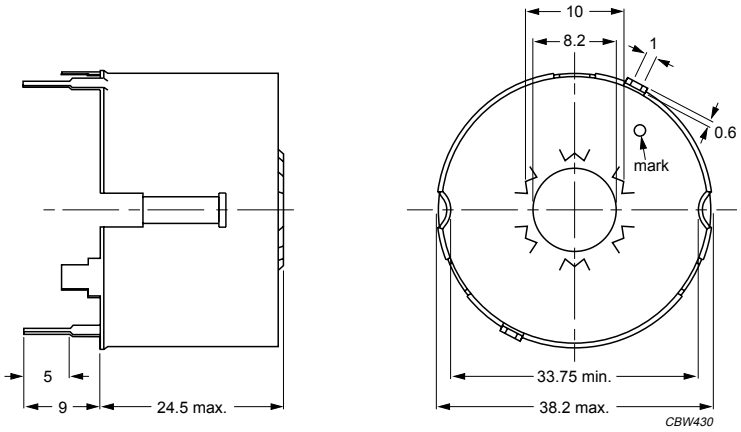

Dimensions in mm.

Fig.4 P36/22 container.

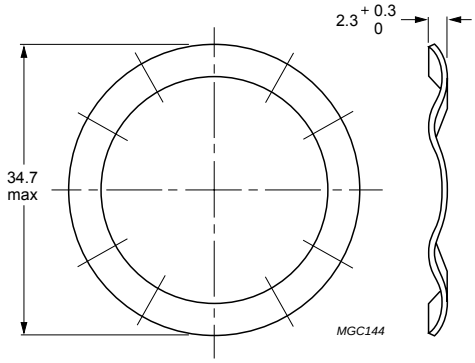

Dimensions in mm.

Fig.5 P36/22 spring.

CORE SETS

Effective core parameters

SYMBOL	PARAMETER	VALUE	UNIT
Σ(l/A)	core factor (C1)	0.259	mm^{-1}
V_e	effective volume	18200	mm^3
l_e	effective length	68.6	mm
A_e	effective area	265	mm^2
A_{min}	minimum area	214	mm^2
m	mass of set	≈104	g

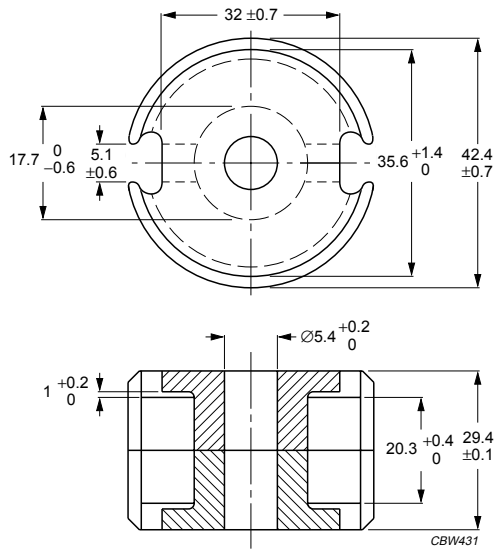

Dimensions in mm.

Fig.1 P42/29 core set.

Core sets for general purpose transformers and power applications

Clamping force for A_L measurements, 550 ±100 N.

GRADE	A_L (nH)	μ_e	TOTAL AIR GAP (μm)	TYPE NUMBER
3C81	315 ±3%	≈ 65	≈ 1320	P42/29-3C81-E315
	400 ±3%	≈ 82	≈ 990	P42/29-3C81-E400
	630 ±3%	≈ 130	≈ 580	P42/29-3C81-A630
	1000 ±3%	≈ 206	≈ 340	P42/29-3C81-A1000
	1600 ±5%	≈ 330	≈ 190	P42/29-3C81-A1600
	11500 ±25%	≈ 2370	≈ 0	P42/29-3C81
3C91 des	11500 ±25%	≈ 2370	≈ 0	P42/29-3C91
3F3	315 ±3%	≈ 65	≈ 1320	P42/29-3F3-E315
	400 ±3%	≈ 82	≈ 990	P42/29-3F3-E400
	630 ±3%	≈ 130	≈ 580	P42/29-3F3-A630
	1000 ±3%	≈ 206	≈ 340	P42/29-3F3-A1000
	1600 ±5%	≈ 330	≈ 190	P42/29-3F3-A1600
	7700 ±25%	≈ 1590	≈ 0	P42/29-3F3

Core sets of high permeability grades

Clamping force for A_L measurements, 550 ± 100 N.

GRADE	A_L (nH)	μ_e	AIR GAP (μm)	TYPE NUMBER
3E27	19000 ±25%	≈ 3910	≈ 0	P42/29-3E27

Properties of core sets under power conditions

GRADE	B (mT) at	CORE LOSS (W) at			
	H = 250 A/m; f = 25 kHz; T = 100 °C	f = 25 kHz; $\hat{B}$ = 200 mT; T = 100 °C	f = 100 kHz; $\hat{B}$ = 100 mT; T = 100 °C	f = 100 kHz; $\hat{B}$ = 200 mT; T = 100 °C	f = 400 kHz; $\hat{B}$ = 50 mT; T = 100 °C
3C81	≥320	≤ 4.2	–	–	–
3C91	≥315	–	≤ 0.9[1]	≤ 7.0[1]	–
3F3	≥315	–	≤ 2.0	–	≤ 3.5

Note

1. Measured at 60 °C.

COIL FORMERS

General data CP-P42/29 coil former

PARAMETER	SPECIFICATION
Coil former material	polyamide (PA6.6), glass reinforced, flame retardant in accordance with *"UL 94V-0"*; UL file number E41938
Maximum operating temperature	130 °C, "IEC 60085", class B

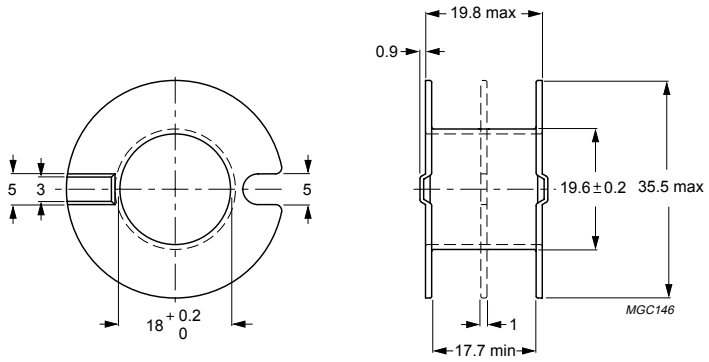

Dimensions in mm.

Fig.2 Coil former: CP-P42/29.

Winding data and area product for CP-P42/29 coil former

NUMBER OF SECTIONS	WINDING AREA (mm^2)	MINIMUM WINDING WIDTH (mm)	AVERAGE LENGTH OF TURN (mm)	AREA PRODUCT Ae x Aw (mm^4)	TYPE NUMBER
1	140	17.8	86	37100	CP-P42/29-1S-C
2	2 × 63	2 × 8	86	2 x 16700	CP-P42/29-2S-C

MOUNTING PARTS

General data and ordering information

ITEM	REMARKS	FIGURE	TYPE NUMBER
Tag plate	material: phenolformaldehyde (PF), glass reinforced	3	TGP-P42/29-C
	flame retardant: in accordance with *"UL 94V-0"*; UL file number E41429		
	maximum operating temperature: 180 °C, *"IEC 60085"*, class H		
	pins: copper-tin alloy (CuSn), tin (Sn) plated		
	resistance to soldering heat in accordance with *"IEC 60068-2-20"*, Part 2, Test Tb, method 1B: 350 °C, 3.5 s		
	solderability in accordance with *"IEC 60068-2-20"*, Part 2, Test Ta, method 1: 235 °C, 2 s		
Container	copper-zinc alloy (CuZn), tin (Sn) plated	4	CON-P42/29
	earth pins: presoldered		
Spring	CrNi-steel	5	SPR-P42/29
	spring force: ≈350 N when mounted		

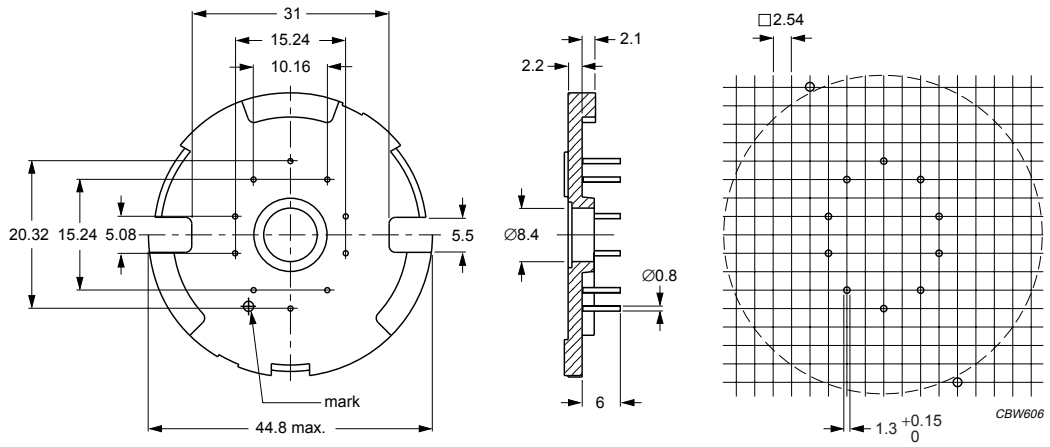

Dimensions in mm.

Fig.3 Tag plate: TGP-P42/29-C.

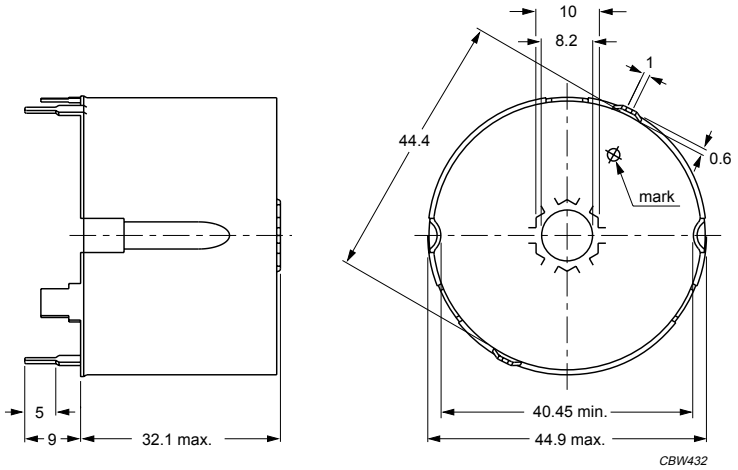

Dimensions in mm.

Fig.4 P42/29 container.

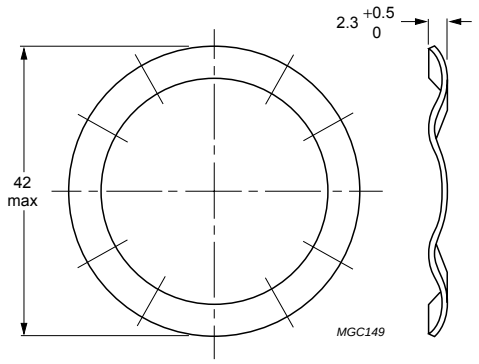

Dimensions in mm.

Fig.5 P42/29 spring.

CORE SETS

Effective core parameters

SYMBOL	PARAMETER	VALUE	UNIT
$\Sigma(l/A)$	core factor (C1)	0.172	mm^{-1}
V_e	effective volume	88200	mm^3
l_e	effective length	123	mm
A_e	effective area	717	mm^2
A_{min}	minimum area	591	mm^2
m	mass of set	≈ 550	g

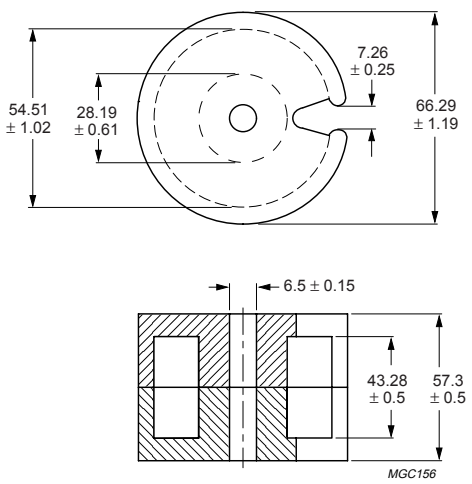

Dimensions in mm.

Fig.1 P66/56 core set.

Core sets for general purpose transformers and power applications

Clamping force for A_L measurements, 1000 ±300 N.

GRADE	A_L (nH)	μ_e	AIR GAP (μm)	TYPE NUMBER
3C81	18200 ±25%	≈ 2490	≈ 0	P66/56-3C81
3C91 des	18200 ±25%	≈ 2490	≈ 0	P66/56-3C91
3F3	12350 ±25%	≈ 1690	≈ 0	P66/56-3F3

Properties of core sets under power conditions

GRADE	B (mT) at	CORE LOSS (W) at			
	H = 250 A/m; f = 25 kHz; T = 100 °C	f = 25 kHz; $\hat{B}$ = 200 mT; T = 100 °C	f = 100 kHz; $\hat{B}$ = 100 mT; T = 100 °C	f = 100 kHz; $\hat{B}$ = 200 mT; T = 100 °C	f = 400 kHz; $\hat{B}$ = 50 mT; T = 100 °C
3C81	≥320	≤ 25	–	–	–
3C91	≥315	–	≤ 4.7(1)	≤ 33(1)	–
3F3	≥315	–	≤ 10	–	≤ 20

Note

1. Measured at 60 °C.

COIL FORMERS

General data CP-P66/56 coil former

PARAMETER	SPECIFICATION
Coil former material	phenolformaldehyde (PF), glass reinforced, flame retardant in accordance with *"UL 94V-0"*; UL file number E59481
Maximum operating temperature	180 °C, "IEC 60085", class H

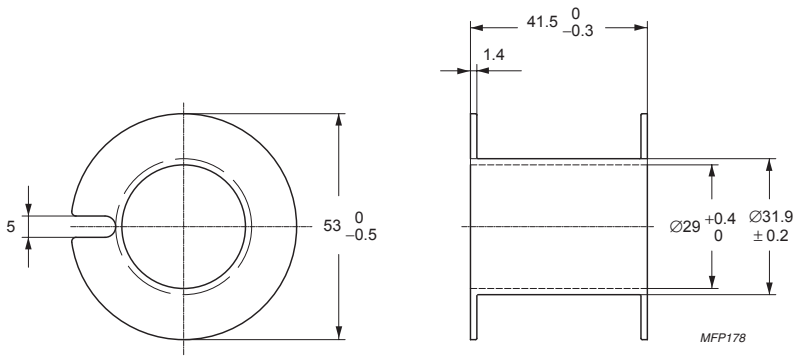

Dimensions in mm.

Fig.2 Coil former: CP-P66/56-1S-C.

Winding data for CP-P66/56 coil former

NUMBER OF SECTIONS	WINDING AREA (mm^2)	MINIMUM WINDING WIDTH (mm)	AVERAGE LENGTH OF TURN (mm)	TYPE NUMBER
1	400	38.4	130	CP-P66/56-1S-C

Soft Ferrites

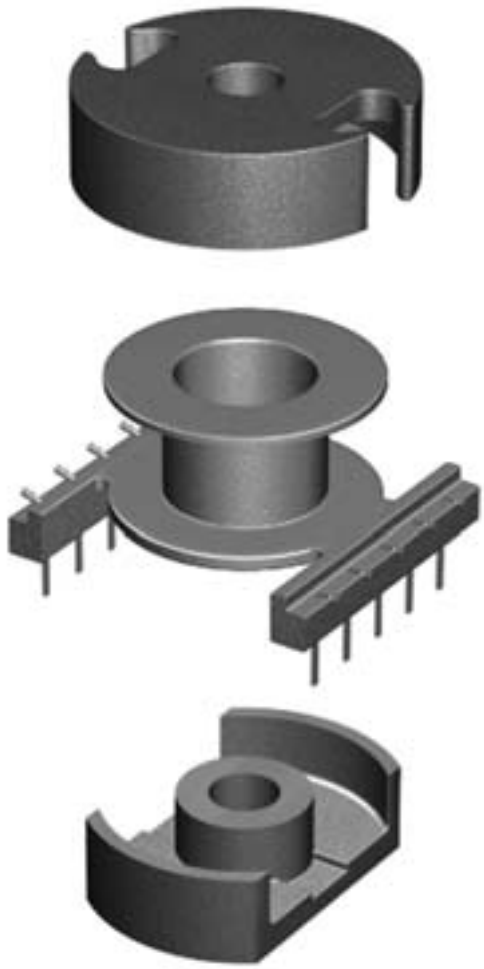

MFW066

PRODUCT OVERVIEW AND TYPE NUMBER STRUCTURE

Product overview PT, PTS, PTS/I cores

CORE TYPE	V_e (mm^3)	A_e (mm^2)	MASS (g)
PT14/8	492	23.3	2.8
PTS14/8	495	22.0	2.5
PT18/11	1110	40.6	6.0
PTS18/11	1070	37.2	5.0
PT23/11	1740	61.0	10.5
PTS23/11	1810	57.2	9.0
PT23/18	2590	62.2	14
PTS23/18	2630	58.3	13
PTS30/19/I	5940	120	31
PTS34/19/I	8140	155	46
PTS40/27/I	14400	204	66

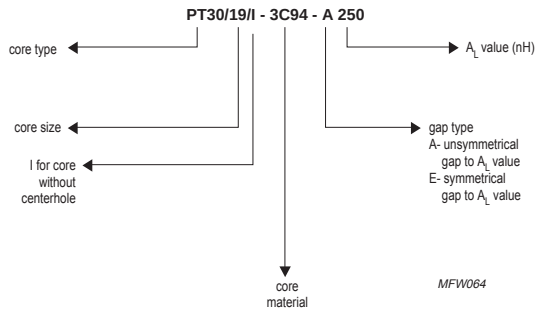

Fig.1 Type number structure for cores.

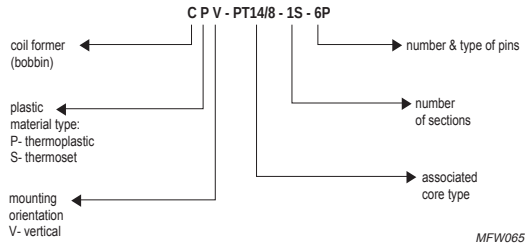

Fig.2 Type number structure for coil formers.

CORE SETS

Effective core parameters

SYMBOL	PARAMETER	VALUE	UNIT
$\Sigma(l/A)$	core factor (C1)	0.910	mm^{-1}
V_e	effective volume	492	mm^3
l_e	effective length	21.1	mm
A_e	effective area	23.3	mm^2
A_{min}	minimum area	19.9	mm^2
m	mass of set	≈ 2.8	g

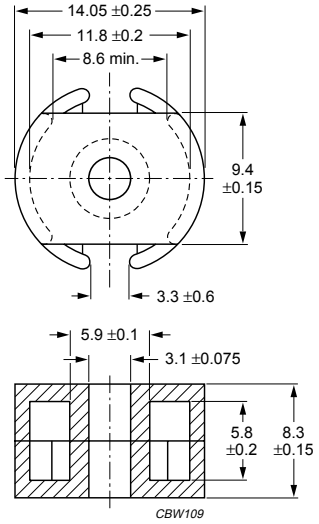

Dimensions in mm.

Fig.1 PT14/8 core set.

Core sets for general purpose transformers and power applications

Clamping force for A_L measurements, 15 ±15 N.

GRADE	A_L (nH)	μ_e	AIR GAP (μm)	TYPE NUMBER
3C81 sup	63 ±3%	≈ 45	≈ 630	PT14/8-3C81-A63
	100 ±3%	≈ 72	≈ 360	PT14/8-3C81-A100
	160 ±3%	≈ 115	≈ 210	PT14/8-3C81-A160
	250 ±3%	≈ 180	≈ 120	PT14/8-3C81-A250
	315 ±5%	≈ 227	≈ 90	PT14/8-3C81-A315
	2400 ±25%	≈ 1730	≈ 0	PT14/8-3C81
3C91 sup	2400 ±25%	≈ 1730	≈ 0	PT14/8-3C91
3F3 sup	63 ±3%	≈ 45	≈ 630	PT14/8-3F3-A63
	100 ±3%	≈ 72	≈ 360	PT14/8-3F3-A100
	160 ±3%	≈ 115	≈ 210	PT14/8-3F3-A160
	250 ±3%	≈ 180	≈ 120	PT14/8-3F3-A250
	315 ±5%	≈ 227	≈ 90	PT14/8-3F3-A315
	1650 ±25%	≈1 190	≈ 0	PT14/8-3F3

Core sets of high permeability grades

Clamping force for A_L measurements, 15 ±5 N.

GRADE	A_L (nH)	μ_e	AIR GAP (μm)	TYPE NUMBER
3E27 sup	4500 ±25%	≈ 3240	≈ 0	PT14/8-3E27

Properties of core sets under power conditions

GRADE	B (mT) at	CORE LOSS (W) at			
	H = 250 A/m; f = 25 kHz; T = 100 °C	f = 25 kHz; $\hat{B}$ = 200 mT; T = 100 °C	f = 100 kHz; $\hat{B}$ = 100 mT; T = 100 °C	f = 100 kHz; $\hat{B}$ = 200 mT; T = 100 °C	f = 400 kHz; $\hat{B}$ = 50 mT; T = 100 °C
3C81	≥320	≤ 0.11	–	–	–
3C91	≥320	–	≤ 0.03[1]	≤ 0.22[1]	–
3F3	≥315	–	≤ 0.06	–	≤ 0.1

Note

1. Measured at 60 °C.

COIL FORMERS

General data 6-pins PT14/8 coil former

PARAMETER	SPECIFICATION
Coil former material	polyamide (PA), glass-reinforced, flame retardant in accordance with *"UL 94V-0"*; UL file number E41938(M)
Pin material	copper-tin alloy (CuSn), tin (Sn) plated
Maximum operating temperature	130 °C, *"IEC 60085"* class B
Resistance to soldering heat	*"IEC 60068-2-20"*, Part 2, Test Tb, method 1B, 350 °C, 3.5 s
Solderability	*"IEC 60068-2-20"*, Part 2, Test Ta, method 1

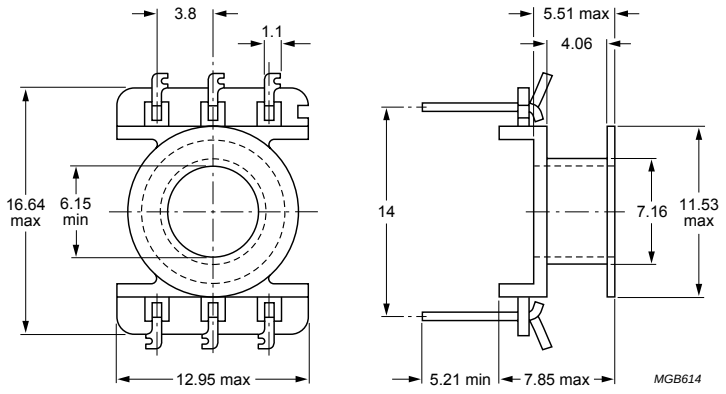

Dimensions in mm.

Fig.2 PT14/8 coil former; 6-pins.

Winding data and area product for 6-pins PT14/8 coil former

NUMBER OF SECTIONS	MINIMUM WINDING AREA (mm^2)	NOMINAL WINDING WIDTH (mm)	AVERAGE LENGTH OF TURN (mm)	AREA PRODUCT Ae x Aw (mm^4)	TYPE NUMBER
1	7.9	4.1	29.2	184	CPV-PT14/8-1S-6P

Additional coil formers and mounting parts are those of *"P14/8"*, but *"area product"* is different.

Winding data and area product (for PT14/8) for CP-P14/8 coil former

NUMBER OF SECTIONS	WINDING AREA (mm^2)	MINIMUM WINDING WIDTH (mm)	AVERAGE LENGTH OF TURN (mm)	AREA PRODUCT Ae x Aw (mm^4)	TYPE NUMBER
1	8.8	4.1	28.9	205	CP-P14/8-1S
2	2×4.0	2×1.85	28.9	2 x 93.2	CP-P14/8-2S

Winding data and area product (for PT14/8) for CP-P14/8-A coil former

NUMBER OF SECTIONS	MINIMUM WINDING AREA (mm^2)	NOMINAL WINDING WIDTH (mm)	AVERAGE LENGTH OF TURN (mm)	AREA PRODUCT Ae x Aw (mm^4)	TYPE NUMBER
1	9.4	4.5	29.0	219	CP-P14/8-1S-A
2	2 x 4.32	2 x 2.0	29.0	2 x 101	CP-P14/8-2S-A
3	3×2.19	3×1.2	29.0	3 x 51.0	CP-P14/8-3S-A

Winding data and area product (for PT14/8) for 4-pins P14/8 coil former for PCB mounting

NUMBER OF SECTIONS	MINIMUM WINDING AREA (mm^2)	NOMINAL WINDING WIDTH (mm)	AVERAGE LENGTH OF TURN (mm)	LENGTH OF PINS (mm)	AREA PRODUCT Ae x Aw (mm^4)	TYPE NUMBER
1	8.65	4.4	29.0	4.4	202	CPV-P14/8-1S-4SPD
1	8.65	4.4	29.0	6.8	202	CPV-P14/8-1S-4SPDL
2	2×3.87	2×2.0	29.0	4.4	2 x 90.2	CPV-P14/8-2S-4SPD
2	2×3.87	2×2.0	29.0	6.8	2 x 90.2	CPV-P14/8-2S-4SPDL

Winding data and area product (for PT14/8) for 6-pins P14/8 coil former for PCB mounting

NUMBER OF SECTIONS	MINIMUM WINDING AREA (mm^2)	NOMINAL WINDING WIDTH (mm)	AVERAGE LENGTH OF TURN (mm)	LENGTH OF PINS (mm)	AREA PRODUCT Ae x Aw (mm^4)	TYPE NUMBER
1	8.65	4.4	29.0	4.4	202	CPV-P14/8-1S-6PD
1	8.65	4.4	29.0	6.8	202	CPV-P14/8-1S-6PDL
2	2×3.87	2×2.0	29.0	4.4	2 x 90.2	CPV-P14/8-2S-6PD
2	2×3.87	2×2.0	29.0	6.8	2 x 90.2	CPV-P14/8-2S-6PDL

CORE SETS

Effective core parameters

SYMBOL	PARAMETER	VALUE	UNIT
$\Sigma(l/A)$	core factor (C1)	1.02	mm^{-1}
V_e	effective volume	495	mm^3
l_e	effective length	22.5	mm
A_e	effective area	22.0	mm^2
A_{min}	minimum area	19.9	mm^2
m	mass of set	≈ 2.5	g

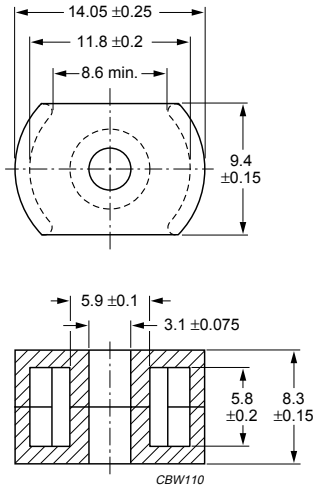

Dimensions in mm.

Fig.1 PTS14/8 core set.

Core sets for general purpose transformers and power applications

Clamping force for A_L measurements, 15 ±15 N.

GRADE	A_L (nH)	μ_e	AIR GAP (μm)	TYPE NUMBER
3C81	63 ±3%	≈ 51	≈ 590	PTS14/8-3C81-A63
	100 ±3%	≈ 81	≈ 340	PTS14/8-3C81-A100
	160 ±3%	≈ 130	≈ 190	PTS14/8-3C81-A160
	250 ±3%	≈ 204	≈ 110	PTS14/8-3C81-A250
	315 ±5%	≈ 257	≈ 90	PTS14/8-3C81-A315
	2330 ±25%	≈ 1900	≈ 0	PTS14/8-3C81
3C91 des	2330 ±25%	≈ 1900	≈ 0	PTS14/8-3C91
3F3	63 ±3%	≈ 51	≈ 590	PTS14/8-3F3-A63
	100 ±3%	≈ 81	≈ 340	PTS14/8-3F3-A100
	160 ±3%	≈ 130	≈ 190	PTS14/8-3F3-A160
	250 ±3%	≈ 204	≈ 110	PTS14/8-3F3-A250
	315 ±5%	≈ 257	≈ 90	PTS14/8-3F3-A315
	1625 ±25%	≈ 1320	≈ 0	PTS14/8-3F3

Core sets of high permeability grades

Clamping force for A_L measurements, 15 ±5 N.

GRADE	A_L (nH)	μ_e	AIR GAP (μm)	TYPE NUMBER
3E27	4370 ±25%	≈ 3540	≈ 0	PTS14/8-3E27

Properties of core sets under power conditions

GRADE	B (mT) at	CORE LOSS (W) at			
	H = 250 A/m; f = 25 kHz; T = 100 °C	f = 25 kHz; $\hat{B}$ = 200 mT; T = 100 °C	f = 100 kHz; $\hat{B}$ = 100 mT; T = 100 °C	f = 100 kHz; $\hat{B}$ = 200 mT; T = 100 °C	f = 400 kHz; $\hat{B}$ = 50 mT; T = 100 °C
3C81	≥320	≤ 0.1	–	–	–
3C91	≥320	–	≤ 0.026(1)	≤ 0.19(1)	–
3F3	≥315	–	≤ 0.054	–	≤ 0.94

Note

1. Measured at 60 °C.

BOBBINS AND ACCESSORIES

For coil formers, winding data and mounting parts, see data sheet, *"P14/8"* and *"PT14/8"*, but *"area product"* is different.

Winding data and area product (for PTS14/8) for 6-pins PT14/8 coil former

NUMBER OF SECTIONS	MINIMUM WINDING AREA (mm^2)	NOMINAL WINDING WIDTH (mm)	AVERAGE LENGTH OF TURN (mm)	AREA PRODUCT Ae x Aw (mm^4)	TYPE NUMBER
1	7.9	4.1	29.2	174	CPV-PT14/8-1S-6P

Winding data and area product (for PTS14/8) for CP-P14/8 coil former

NUMBER OF SECTIONS	WINDING AREA (mm^2)	MINIMUM WINDING WIDTH (mm)	AVERAGE LENGTH OF TURN (mm)	AREA PRODUCT Ae x Aw (mm^4)	TYPE NUMBER
1	8.8	4.1	28.9	194	CP-P14/8-1S
2	2 × 4.0	2 × 1.85	28.9	2 x 88.0	CP-P14/8-2S

Winding data and area product (for PTS14/8) for CP-P14/8-A coil former

NUMBER OF SECTIONS	MINIMUM WINDING AREA (mm^2)	NOMINAL WINDING WIDTH (mm)	AVERAGE LENGTH OF TURN (mm)	AREA PRODUCT Ae x Aw (mm^4)	TYPE NUMBER
1	9.4	4.5	29.0	207	CP-P14/8-1S-A
2	2 x 4.32	2 x 2.0	29.0	2 x 95.0	CP-P14/8-2S-A
3	3×2.19	3×1.2	29.0	3 x 48.2	CP-P14/8-3S-A

Winding data and area product (for PTS14/8) for 4-pins P14/8 coil former for PCB mounting

NUMBER OF SECTIONS	MINIMUM WINDING AREA (mm^2)	NOMINAL WINDING WIDTH (mm)	AVERAGE LENGTH OF TURN (mm)	LENGTH OF PINS (mm)	AREA PRODUCT Ae x Aw (mm^4)	TYPE NUMBER
1	8.65	4.4	29.0	4.4	190	CPV-P14/8-1S-4SPD
1	8.65	4.4	29.0	6.8	190	CPV-P14/8-1S-4SPDL
2	2×3.87	2×2.0	29.0	4.4	2 x 85.1	CPV-P14/8-2S-4SPD
2	2×3.87	2×2.0	29.0	6.8	2 x 85.1	CPV-P14/8-2S-4SPDL

Winding data and area product (for PTS14/8) for 6-pins P14/8 coil former for PCB mounting

NUMBER OF SECTIONS	MINIMUM WINDING AREA (mm^2)	NOMINAL WINDING WIDTH (mm)	AVERAGE LENGTH OF TURN (mm)	LENGTH OF PINS (mm)	AREA PRODUCT Ae x Aw (mm^4)	TYPE NUMBER
1	8.65	4.4	29.0	4.4	190	CPV-P14/8-1S-6PD
1	8.65	4.4	29.0	6.8	190	CPV-P14/8-1S-6PDL
2	2×3.87	2×2.0	29.0	4.4	2 x 85.1	CPV-P14/8-2S-6PD
2	2×3.87	2×2.0	29.0	6.8	2 x 85.1	CPV-P14/8-2S-6PDL

CORE SETS

Effective core parameters

SYMBOL	PARAMETER	VALUE	UNIT
$\Sigma(l/A)$	core factor (C1)	0.670	mm^{-1}
V_e	effective volume	1110	mm^3
l_e	effective length	27.2	mm
A_e	effective area	40.6	mm^2
A_{min}	minimum area	32.9	mm^2
m	mass of set	≈ 6.0	g

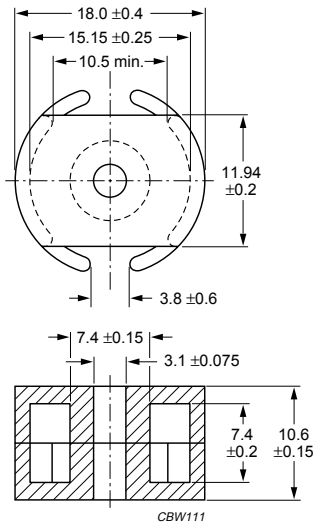

Dimensions in mm.

Fig.1 PT18/11 core set.

Core sets for general purpose transformers and power applications

Clamping force for A_L measurements, 20 ±5 N.

GRADE	A_L (nH)	μ_e	AIR GAP (μm)	TYPE NUMBER
3C81 sup	100 ±3%	≈ 53	≈ 660	PT18/11-3C81-A100
	160 ±3%	≈ 85	≈ 380	PT18/11-3C81-A160
	250 ±3%	≈ 133	≈ 220	PT18/11-3C81-A250
	315 ±3%	≈ 168	≈ 170	PT18/11-3C81-A315
	400 ±5%	≈ 213	≈ 130	PT18/11-3C81-A400
	3130 ±25%	≈ 1670	≈ 0	PT18/11-3C81
3C91 sup	3130 ±25%	≈ 1670	≈ 0	PT18/11-3C91
3F3 sup	100 ±3%	≈ 53	≈ 660	PT18/11-3F3-A100
	160 ±3%	≈ 85	≈ 380	PT18/11-3F3-A160
	250 ±3%	≈ 133	≈ 220	PT18/11-3F3-A250
	315 ±3%	≈ 168	≈ 170	PT18/11-3F3-A315
	400 ±5%	≈ 213	≈ 130	PT18/11-3F3-A400
	2500 ±25%	≈ 1340	≈ 0	PT18/11-3F3

Core sets of high permeability grades

Clamping force for A_L measurements, 15 ±5 N.

GRADE	A_L (nH)	μ_e	AIR GAP (μm)	TYPE NUMBER
3E27 sup	5760 ±25%	≈ 3075	≈ 0	PT18/11-3E27

Properties of core sets under power conditions

GRADE	B (mT) at	CORE LOSS (W) at			
	H = 250 A/m; f = 25 kHz; T = 100 °C	f = 25 kHz; $\hat{B}$ = 200 mT; T = 100 °C	f = 100 kHz; $\hat{B}$ = 100 mT; T = 100 °C	f = 100 kHz; $\hat{B}$ = 200 mT; T = 100 °C	f = 400 kHz; $\hat{B}$ = 50 mT; T = 100 °C
3C81	≥320	≤ 0.23	–	–	–
3C91	≥320	–	≤ 0.06(1)	≤ 0.5(1)	–
3F3	≥315	–	≤ 0.12	–	≤ 0.21

Note

1. Measured at 60 °C.

BOBBINS AND ACCESSORIES

Coil formers, winding data and mounting parts are equal to those of *"P18/11"* , but *"area product"* is different.

Winding data and area product (for PT18/11) for CP-P18/11 coil former

NUMBER OF SECTIONS	WINDING AREA (mm^2)	MINIMUM WINDING WIDTH (mm)	AVERAGE LENGTH OF TURN (mm)	AREA PRODUCT Ae x Aw (mm^4)	TYPE NUMBER
1	17.1	5.7	36.6	694	CP-P18/11-1S
2	2 × 7.95	2 × 2.65	36.6	2 x 323	CP-P18/11-2S
3	3 × 4.95	3 × 1.6	36.6	3 x 201	CP-P18/11-3S

Winding data and area product (for PT18/11) for 6-pins P18/11 coil former for PCB mounting

NUMBER OF SECTIONS	MINIMUM WINDING AREA (mm^2)	NOMINAL WINDING WIDTH (mm)	AVERAGE LENGTH OF TURN (mm)	LENGTH OF PINS (mm)	AREA PRODUCT Ae x Aw (mm^4)	TYPE NUMBER
1	16.8	6.0	36.7	4.4	682	CPV-P18/11-1S-6PD
1	16.8	6.0	36.7	6.8	682	CPV-P18/11-1S-6PDL
2	2 × 7.61	2 × 2.8	36.7	4.4	2 x 309	CPV-P18/11-2S-6PD
2	2 × 7.61	2 × 2.8	36.7	6.8	2 x 309	CPV-P18/11-2S-6PDL
3	3 × 4.58	3 × 1.7	36.7	4.4	3 x 186	CPV-P18/11-3S-6PD
3	3 × 4.58	3 × 1.7	36.7	6.8	3 x 186	CPV-P18/11-3S-6PDL

CORE SETS

Effective core parameters

SYMBOL	PARAMETER	VALUE	UNIT
$\Sigma(l/A)$	core factor (C1)	0.770	mm^{-1}
V_e	effective volume	1070	mm^3
l_e	effective length	28,7	mm
A_e	effective area	37.2	mm^2
A_{min}	minimum area	31.0	mm^2
m	mass of set	≈ 5.0	g

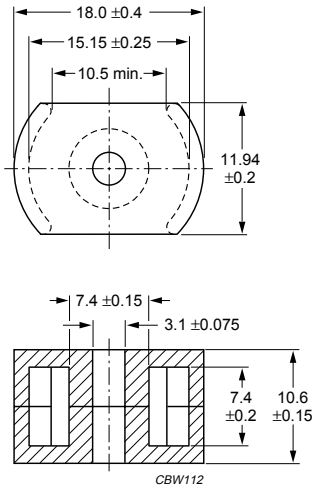

Dimensions in mm.

Fig.1 PTS18/11 core set.

Core sets for general purpose transformers and power applications

Clamping force for A_L measurements, 20 ±5 N.

GRADE	A_L (nH)	μ_e	AIR GAP (μm)	TYPE NUMBER
3C81	100 ±3%	≈ 61	≈ 600	PTS18/11-3C81-A100
	160 ±3%	≈ 98	≈ 340	PTS18/11-3C81-A160
	250 ±3%	≈ 153	≈ 200	PTS18/11-3C81-A250
	315 ±3%	≈ 193	≈ 150	PTS18/11-3C81-A315
	400 ±5%	≈ 245	≈ 120	PTS18/11-3C81-A400
	3000 ±25%	≈ 1830	≈ 0	PTS18/11-3C81
3C91 des	3000 ±25%	≈ 1830	≈ 0	PTS18/11-3C91
3F3	100 ±3%	≈ 61	≈ 600	PTS18/11-3F3-A100
	160 ±3%	≈ 98	≈ 340	PTS18/11-3F3-A160
	250 ±3%	≈ 153	≈ 200	PTS18/11-3F3-A250
	315 ±3%	≈ 193	≈ 150	PTS18/11-3F3-A315
	400 ±5%	≈ 245	≈ 120	PTS18/11-3F3-A400
	2225 ±25%	≈ 1365	≈ 0	PTS18/11-3F3

Core sets of high permeability grades

Clamping force for A_L measurements, 15 ±5 N.

GRADE	A_L (nH)	μ_e	AIR GAP (μm)	TYPE NUMBER
3E27	5140 ±25%	≈ 3150	≈ 0	PTS18/11-3E27

Properties of core sets under power conditions

GRADE	B (mT) at	CORE LOSS (W) at			
	H = 250 A/m; f = 25 kHz; T = 100 °C	f = 25 kHz; $\hat{B}$ = 200 mT; T = 100 °C	f = 100 kHz; $\hat{B}$ = 100 mT; T = 100 °C	f = 100 kHz; $\hat{B}$ = 200 mT; T = 100 °C	f = 400 kHz; $\hat{B}$ = 50 mT; T = 100 °C
3C81	≥320	≤ 0.22	–	–	–
3C91	≥320	–	≤ 0.055(1)	≤ 0.4(1)	–
3F3	≥315	–	≤ 0.12	–	≤ 0.2

Note

1. Measured at 60 °C.

BOBBINS AND ACCESSORIES

Coil formers, winding data and mounting parts are equal to those of *"P18/11"* , but *"area product"* is different.

Winding data and area product (for PTS18/11) for CP-P18/11 coil former

NUMBER OF SECTIONS	WINDING AREA (mm^2)	MINIMUM WINDING WIDTH (mm)	AVERAGE LENGTH OF TURN (mm)	AREA PRODUCT Ae x Aw (mm^4)	TYPE NUMBER
1	17.1	5.7	36.6	636	CP-P18/11-1S
2	2 × 7.95	2 × 2.65	36.6	2 x 296	CP-P18/11-2S
3	3 × 4.95	3 × 1.6	36.6	3 x 184	CP-P18/11-3S

Winding data and area product (for PTS18/11) for 6-pins P18/11 coil former for PCB mounting

NUMBER OF SECTIONS	MINIMUM WINDING AREA (mm^2)	NOMINAL WINDING WIDTH (mm)	AVERAGE LENGTH OF TURN (mm)	LENGTH OF PINS (mm)	AREA PRODUCT Ae x Aw (mm^4)	TYPE NUMBER
1	16.8	6.0	36.7	4.4	625	CPV-P18/11-1S-6PD
1	16.8	6.0	36.7	6.8	625	CPV-P18/11-1S-6PDL
2	2 × 7.61	2 × 2.8	36.7	4.4	2 x 283	CPV-P18/11-2S-6PD
2	2 × 7.61	2 × 2.8	36.7	6.8	2 x 283	CPV-P18/11-2S-6PDL
3	3 × 4.58	3 × 1.7	36.7	4.4	3 x 170	CPV-P18/11-3S-6PD
3	3 × 4.58	3 × 1.7	36.7	6.8	3 x 170	CPV-P18/11-3S-6PDL

CORE SETS

Effective core parameters

SYMBOL	PARAMETER	VALUE	UNIT
$\Sigma(l/A)$	core factor (C1)	0.470	mm^{-1}
V_e	effective volume	1740	mm^3
l_e	effective length	28.6	mm
A_e	effective area	61.0	mm^2
A_{min}	minimum area	53.6	mm^2
m	mass of set	≈ 10.5	g

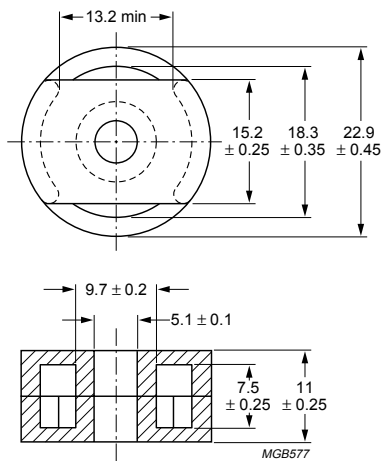

Dimensions in mm.

Fig.1 PT23/11 core set.

Core sets for general purpose transformers and power applications

Clamping force for A_L measurements, 30 ±10 N.

GRADE	A_L (nH)	μ_e	AIR GAP (μm)	TYPE NUMBER
3C81 sup	160 ±3%	≈ 60	≈ 580	PT23/11-3C81-A160
	250 ±3%	≈ 93	≈ 350	PT23/11-3C81-A250
	315 ±3%	≈ 118	≈ 270	PT23/11-3C81-A315
	400 ±3%	≈ 149	≈ 200	PT23/11-3C81-A400
	630 ±5%	≈ 235	≈ 120	PT23/11-3C81-A630
	5500 ±25%	≈ 2050	≈ 0	PT23/11-3C81
3C91 sup	5500 ±25%	≈ 2050	≈ 0	PT23/11-3C91
3F3 sup	160 ±3%	≈ 60	≈ 580	PT23/11-3F3-A160
	250 ±3%	≈ 93	≈ 350	PT23/11-3F3-A250
	315 ±3%	≈ 118	≈ 270	PT23/11-3F3-A315
	400 ±3%	≈ 149	≈ 200	PT23/11-3F3-A400
	630 ±5%	≈ 235	≈ 120	PT23/11-3F3-A630
	3700 ±25%	≈ 1380	≈ 0	PT23/11-3F3

Core sets of high permeability grades

Clamping force for A_L measurements, 30 ±10 N.

GRADE	A_L (nH)	μ_e	AIR GAP (μm)	TYPE NUMBER
3E27 sup	8400 ±25%	≈ 3130	≈ 0	PT23/11-3E27

Properties of core sets under power conditions

GRADE	B (mT) at	CORE LOSS (W) at			
	H = 250 A/m; f = 25 kHz; T = 100 °C	f = 25 kHz; $\hat{B}$ = 200 mT; T = 100 °C	f = 100 kHz; $\hat{B}$ = 100 mT; T = 100 °C	f = 100 kHz; $\hat{B}$ = 200 mT; T = 100 °C	f = 400 kHz; $\hat{B}$ = 50 mT; T = 100 °C
3C81	≥320	≤ 0.4	–	–	–
3C91	≥320	–	≤ 0.09[1]	≤ 0.7[1]	–
3F3	≥315	–	≤ 0.19	–	≤ 0.33

Note

1. Measured at 60 °C.

COIL FORMERS

General data 10-pins PT23/11 coil former

PARAMETER	SPECIFICATION
Coil former material	polyamide (PA), glass-reinforced, flame retardant in accordance with *"UL 94V-0"*; UL file number E41938(M)
Pin material	copper-tin alloy (CuSn), tin (Sn) plated
Maximum operating temperature	130 °C, *"IEC 60085"* class B
Resistance to soldering heat	*"IEC 68-2-20"*, Part 2, Test Tb, method 1B, 350 °C, 3.5 s
Solderability	*"IEC 68-2-20"*, Part 2, Test Ta, method 1

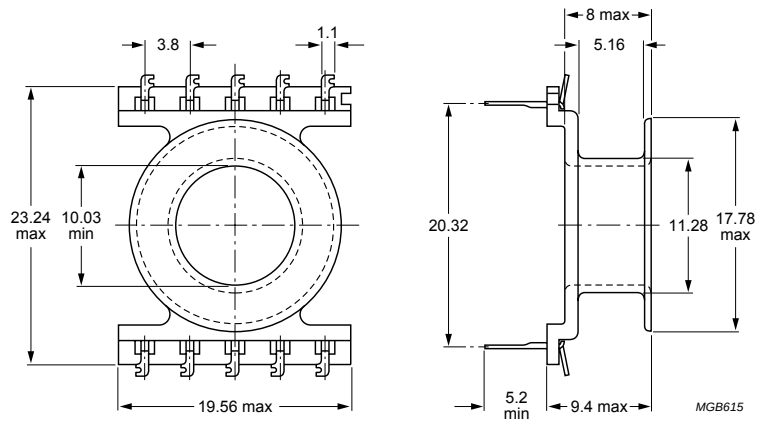

Dimensions in mm.

Fig.2 PT23/11 coil former; 10-pins.

Winding data and area product for 10-pins PT23/11 coil former

NUMBER OF SECTIONS	MINIMUM WINDING AREA (mm^2)	NOMINAL WINDING WIDTH (mm)	AVERAGE LENGTH OF TURN (mm)	AREA PRODUCT Ae x Aw (mm^4)	TYPE NUMBER
1	15.1	5.2	45.2	921	CPV-PT23/11-1S-10P

CORE SETS

Effective core parameters

SYMBOL	PARAMETER	VALUE	UNIT
$\Sigma(l/A)$	core factor (C1)	0.550	mm^{-1}
V_e	effective volume	1810	mm^3
l_e	effective length	31.6	mm
A_e	effective area	57.2	mm^2
A_{min}	minimum area	53.6	mm^2
m	mass of set	≈ 9.0	g

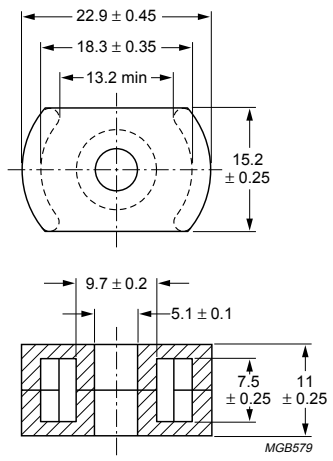

Dimensions in mm.

Fig.1 PTS23/11 core set.

Core sets for general purpose transformers and power applications

Clamping force for A_L measurements, 30 ±10 N.

GRADE	A_L (nH)	μ_e	AIR GAP (μm)	TYPE NUMBER
3C81	160 ±3%	≈ 70	≈ 540	PTS23/11-3C81-A160
	250 ±3%	≈ 110	≈ 320	PTS23/11-3C81-A250
	315 ±3%	≈ 138	≈ 250	PTS23/11-3C81-A315
	400 ±3%	≈ 175	≈ 190	PTS23/11-3C81-A400
	630 ±5%	≈ 276	≈ 110	PTS23/11-3C81-A630
	4890 ±25%	≈ 2150	≈ 0	PTS23/11-3C81
3C91 des	4890 ±25%	≈ 2150	≈ 0	PTS23/11-3C91
3F3	160 ±3%	≈ 70	≈ 540	PTS23/11-3F3-A160
	250 ±3%	≈ 110	≈ 320	PTS23/11-3F3-A250
	315 ±3%	≈ 138	≈ 250	PTS23/11-3F3-A315
	400 ±3%	≈ 175	≈ 190	PTS23/11-3F3-A400
	630 ±5%	≈ 276	≈ 110	PTS23/11-3F3-A630
	3280 ±25%	≈ 1510	≈ 0	PTS23/11-3F3

Core sets of high permeability grades

Clamping force for A_L measurements, 30 ±10 N.

GRADE	A_L (nH)	μ_e	AIR GAP (μm)	TYPE NUMBER
3E27	7250 ±25%	≈ 3190	≈ 0	PTS23/11-3E27

Properties of core sets under power conditions

GRADE	B (mT) at	CORE LOSS (W) at			
	H = 250 A/m; f = 25 kHz; T = 100 °C	f = 25 kHz; $\hat{B}$ = 200 mT; T = 100 °C	f = 100 kHz; $\hat{B}$ = 100 mT; T = 100 °C	f = 100 kHz; $\hat{B}$ = 200 mT; T = 100 °C	f = 400 kHz; $\hat{B}$ = 50 mT; T = 100 °C
3C81	≥320	≤ 0.37	–	–	–
3C91	≥320	–	≤ 0.09(1)	≤ 0.7(1)	–
3F3	≥315	–	≤ 0.2	–	≤ 0.35

Note

1. Measured at 60 °C.

BOBBINS AND ACCESSORIES

Coil formers, winding data and mounting parts are equal to those of *"PT23/11"*, but *"area product"* is different.

Winding data and area product (for PTS23/11) for 10-pins PT23/11 coil former

NUMBER OF SECTIONS	MINIMUM WINDING AREA (mm^2)	NOMINAL WINDING WIDTH (mm)	AVERAGE LENGTH OF TURN (mm)	AREA PRODUCT Ae x Aw (mm^4)	TYPE NUMBER
1	15.1	5.2	45.2	864	CPV-PT23/11-1S-10P

CORE SETS

Effective core parameters

SYMBOL	PARAMETER	VALUE	UNIT
$\Sigma(l/A)$	core factor (C1)	0.670	mm^{-1}
V_e	effective volume	2590	mm^3
l_e	effective length	41.6	mm
A_e	effective area	62.2	mm^2
A_{min}	minimum area	53.6	mm^2
m	mass of set	≈ 14	g

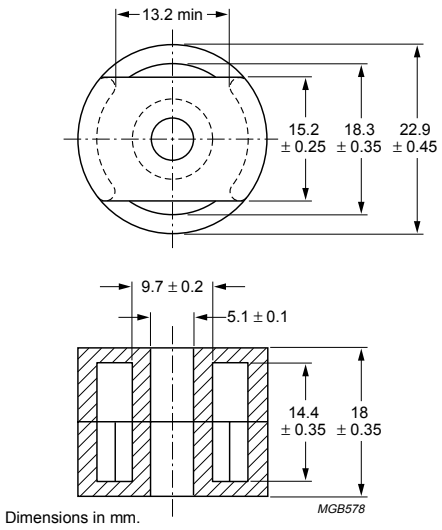

Fig.1 PT23/18 core set.

Core sets for general purpose transformers and power applications

Clamping force for A_L measurements, 30 ±10 N.

GRADE	A_L (nH)	μ_e	AIR GAP (μm)	TYPE NUMBER
3C81 sup	160 ±3%	≈ 85	≈ 620	PT23/18-3C81-A160
	250 ±3%	≈ 133	≈ 360	PT23/18-3C81-A250
	315 ±3%	≈ 168	≈ 270	PT23/18-3C81-A315
	400 ±3%	≈ 213	≈ 200	PT23/18-3C81-A400
	630 ±5%	≈ 335	≈ 120	PT23/18-3C81-A630
	4100 ±25%	≈ 2180	≈ 0	PT23/18-3C81
3C91 sup	4100 ±25%	≈ 2180	≈ 0	PT23/18-3C91
3F3 sup	160 ±3%	≈ 85	≈ 620	PT23/18-3F3-A160
	250 ±3%	≈ 133	≈ 360	PT23/18-3F3-A250
	315 ±3%	≈ 168	≈ 270	PT23/18-3F3-A315
	400 ±3%	≈ 213	≈ 200	PT23/18-3F3-A400
	630 ±5%	≈ 335	≈ 120	PT23/18-3F3-A630
	2750 ±25%	≈ 1460	≈ 0	PT23/18-3F3

Core sets of high permeability grades

Clamping force for A_L measurements, 30 ±10 N.

GRADE	A_L (nH)	μ_e	AIR GAP (μm)	TYPE NUMBER
3E27 sup	6400 ±25%	≈ 3410	≈ 0	PT23/18-3E27

Properties of core sets under power conditions

GRADE	B (mT) at	CORE LOSS (W) at			
	H = 250 A/m; f = 25 kHz; T = 100 °C	f = 25 kHz; $\hat{B}$ = 200 mT; T = 100 °C	f = 100 kHz; $\hat{B}$ = 100 mT; T = 100 °C	f = 100 kHz; $\hat{B}$ = 200 mT; T = 100 °C	f = 400 kHz; $\hat{B}$ = 50 mT; T = 100 °C
3C81	≥320	≤ 0.6	–	–	–
3C91	≥320	–	≤ 0.13[1]	≤ 1.0[1]	–
3F3	≥315	–	≤ 0.29	–	≤ 0.49

Note

1. Measured at 60 °C.

COIL FORMER

General data 10-pins PT23/18 coil former

PARAMETER	SPECIFICATION
Coil former material	polyamide (PA), glass-reinforced, flame retardant in accordance with *"UL 94V-0"*; UL file number E41938(M)
Pin material	copper-tin alloy (CuSn), tin (Sn) plated
Maximum operating temperature	130 °C, *"IEC 60085"*, class B
Resistance to soldering heat	*"IEC 60068-2-20"*, Part 2, Test Tb, method 1B, 350 °C, 3.5 s
Solderability	*"IEC 60068-2-20"*, Part 2, Test Ta, method 1

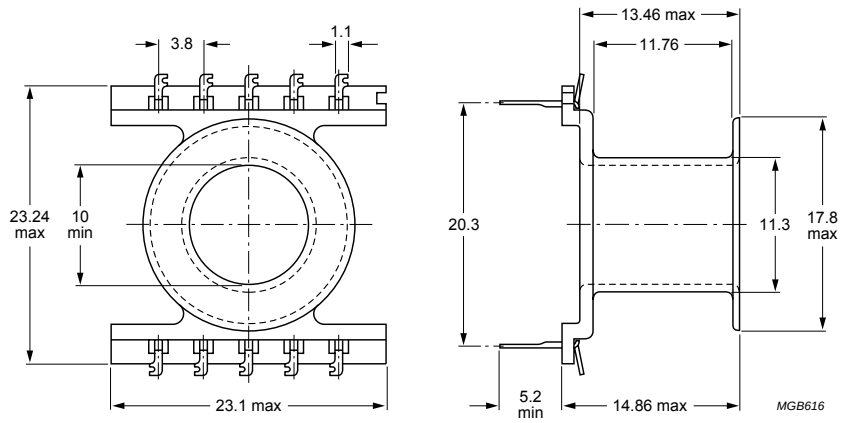

Dimensions in mm.

Fig.2 PT23/18 coil former; 10-pins.

Winding data and area product for 10-pins PT23/18 coil former

NUMBER OF SECTIONS	MINIMUM WINDING AREA (mm^2)	NOMINAL WINDING WIDTH (mm)	AVERAGE LENGTH OF TURN (mm)	AREA PRODUCT Ae x Aw (mm^4)	TYPE NUMBER
1	36.0	11.8	45.2	2240	CPV-PT23/18-1S-10P

CORE SETS

Effective core parameters

SYMBOL	PARAMETER	VALUE	UNIT
$\Sigma(l/A)$	core factor (C1)	0.770	mm^{-1}
V_e	effective volume	2630	mm^3
l_e	effective length	45.1	mm
A_e	effective area	58.3	mm^2
A_{min}	minimum area	53.6	mm^2
m	mass of set	≈ 13	g

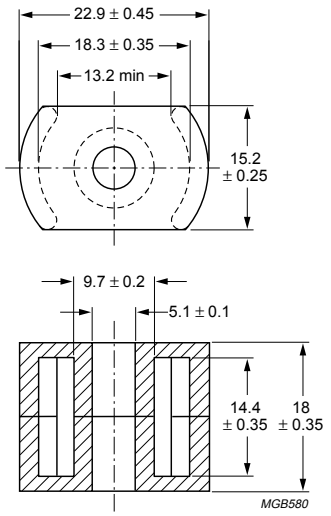

Dimensions in mm.

Fig.1 PTS23/18 core set.

Core sets for general purpose transformers and power applications

Clamping force for A_L measurements, 30 ±10 N.

GRADE	A_L (nH)	μ_e	AIR GAP (μm)	TYPE NUMBER
3C81	160 ±3%	≈ 98	≈ 570	PTS23/18-3C81-A160
	250 ±3%	≈ 154	≈ 330	PTS23/18-3C81-A250
	315 ±3%	≈ 194	≈ 250	PTS23/18-3C81-A315
	400 ±3%	≈ 246	≈ 190	PTS23/18-3C81-A400
	630 ±5%	≈ 387	≈ 110	PTS23/18-3C81-A630
	3800 ±25%	≈ 2320	≈ 0	PTS23/18-3C81
3C91 des	3800 ±25%	≈ 2320	≈ 0	PTS23/18-3C91
3F3	160 ±3%	≈ 98	≈ 570	PTS23/18-3F3-A160
	250 ±3%	≈ 154	≈ 330	PTS23/18-3F3-A250
	315 ±3%	≈ 194	≈ 250	PTS23/18-3F3-A315
	400 ±3%	≈ 246	≈ 190	PTS23/18-3F3-A400
	630 ±5%	≈ 387	≈ 110	PTS23/18-3F3-A630
	2500 ±25%	≈ 1500	≈ 0	PTS23/18-3F3

Core sets of high permeability grades

Clamping force for A_L measurements, 30 ±10 N.

GRADE	A_L (nH)	μ_e	AIR GAP (μm)	TYPE NUMBER
3E27	5945 ±25%	≈ 3630	≈ 0	PTS23/18-3E27

Properties of core sets under power conditions

GRADE	B (mT) at	CORE LOSS (W) at			
	H = 250 A/m; f = 25 kHz; T = 100 °C	f = 25 kHz; $\hat{B}$ = 200 mT; T = 100 °C	f = 100 kHz; $\hat{B}$ = 100 mT; T = 100 °C	f = 100 kHz; $\hat{B}$ = 200 mT; T = 100 °C	f = 400 kHz; $\hat{B}$ = 50 mT; T = 100 °C
3C81	≥320	≤ 0.54	–	–	–
3C91	≥320	–	≤ 0.14(1)	≤ 1.0(1)	–
3F3	≥315	–	≤ 0.29	–	≤ 0.5

Note

1. Measured at 60 °C.

BOBBINS AND ACCESSORIES

Coil formers, winding data and mounting parts are equal to those of *"PT23/18"*, but *"area product"* is different.

Winding data and area product (for PTS23/18) for 10-pins PT23/18 coil former

NUMBER OF SECTIONS	MINIMUM WINDING AREA (mm^2)	NOMINAL WINDING WIDTH (mm)	AVERAGE LENGTH OF TURN (mm)	AREA PRODUCT Ae x Aw (mm^4)	TYPE NUMBER
1	36.0	11.8	45.2	2100	CPV-PT23/18-1S-10P

CORE SETS

Effective core parameters

SYMBOL	PARAMETER	VALUE	UNIT
$\Sigma(l/A)$	core factor (C1)	0.412	mm^{-1}
V_e	effective volume	5940	mm^3
l_e	effective length	49.5	mm
A_e	effective area	120	mm^2
A_{min}	minimum area	111	mm^2
m	mass of set	≈ 31	g

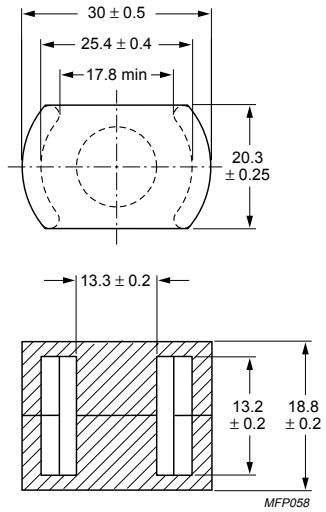

Dimensions in mm.

Fig.1 PTS30/19/I core set.

Core sets for general purpose transformers and power applications

Clamping force for A_L measurements, 60 ± 20 N.

GRADE	A_L (nH)	μ_e	AIR GAP (μm)	TYPE NUMBER
3C92 des	3830 ± 25 %	≈ 1260	≈ 0	PTS30/19/I-3C92
3C94	5400 ± 25 %	≈ 1770	≈ 0	PTS30/19/I-3C94
3C96 des	4840 ± 25 %	≈ 1590	≈ 0	PTS30/19/I-3C96

Properties of core sets under power conditions

GRADE	B (mT) at	CORE LOSS (W) at		
	H = 250 A/m; f = 25 kHz; T = 100 °C	f = 100 kHz; $\hat{B}$ = 100 mT; T = 100 °C	f = 100 kHz; $\hat{B}$ = 200 mT; T = 100 °C	f = 500 kHz; $\hat{B}$ = 50 mT; T = 100 °C
3C92	≥ 320	≤ 0.53	≤ 3.5	–
3C94	≥ 320	≤ 0.53	≤ 3.5	–
3C96	≥ 315	≤ 0.4	≤ 2.7	≤ 2.2

BOBBINS AND ACCESSORIES

For coil formers, winding data and mounting parts, see data sheet, *"P30/19"*.

CORE SETS

Effective core parameters

SYMBOL	PARAMETER	VALUE	UNIT
$\Sigma(l/A)$	core factor (C1)	0.339	mm^{-1}
V_e	effective volume	8140	mm^3
l_e	effective length	52.5	mm
A_e	effective area	155	mm^2
A_{min}	minimum area	145	mm^2
m	mass of set	≈ 46	g

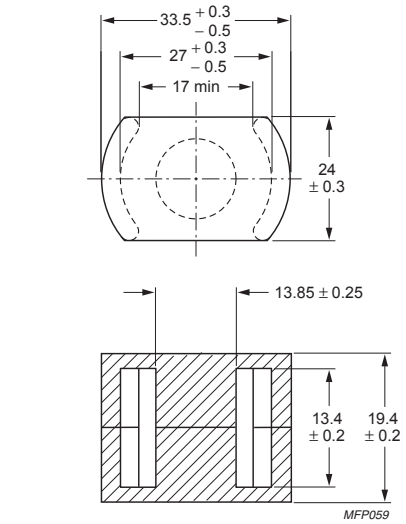

Dimensions in mm.

Fig.1 PTS34/19/I core set.

Core sets for general purpose transformers and power applications

Clamping force for A_L measurements, 80 ± 20 N.

GRADE	A_L (nH)	μ_e	AIR GAP (μm)	TYPE NUMBER
3C92 des	4770 ± 25 %	≈ 1290	≈ 0	PTS34/19/I-3C92
3C94	6800 ± 25 %	≈ 1830	≈ 0	PTS34/19/I-3C94
3C96 des	6070 ± 25 %	≈ 1640	≈ 0	PTS34/19/I-3C96

Properties of core sets under power conditions

GRADE	B (mT) at	CORE LOSS (W) at		
	H = 250 A/m; f = 25 kHz; T = 100 °C	f = 100 kHz; $\hat{B}$ = 100 mT; T = 100 °C	f = 100 kHz; $\hat{B}$ = 200 mT; T = 100 °C	f = 500 kHz; $\hat{B}$ = 50 mT; T = 100 °C
3C92	≥320	≤ 0.8	≤ 4.9	–
3C94	≥320	≤ 0.8	≤ 4.9	–
3C96	≥315	≤ 0.6	≤ 3.7	≤ 3.0

CORE SETS

Effective core parameters

SYMBOL	PARAMETER	VALUE	UNIT
$\Sigma(l/A)$	core factor (C1)	0.346	mm^{-1}
V_e	effective volume	14400	mm^3
l_e	effective length	70.5	mm
A_e	effective area	204	mm^2
A_{min}	minimum area	201	mm^2
m	mass of set	≈ 66	g

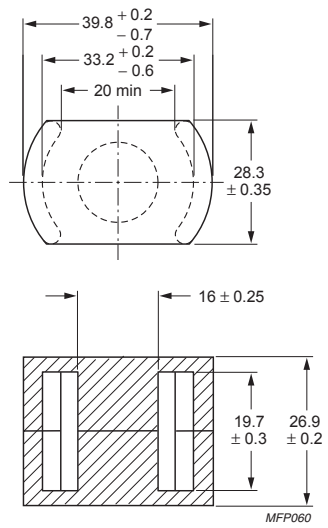

Dimensions in mm.

Fig.1 PTS40/27/I core set.

Core sets for general purpose transformers and power applications

Clamping force for A_L measurements, 100 ± 25 N.

GRADE	A_L (nH)	μ_e	AIR GAP (μm)	TYPE NUMBER
3C92 des	4740 ± 25 %	≈ 1300	≈ 0	PTS40/27/I-3C92
3C94	6800 ± 25 %	≈ 1870	≈ 0	PTS40/27/I-3C94
3C96 des	6060 ± 25 %	≈ 1670	≈ 0	PTS40/27/I-3C96

Properties of core sets under power conditions

GRADE	B (mT) at	CORE LOSS (W) at		
	H = 250 A/m; f = 25 kHz; T = 100 °C	f = 100 kHz; $\hat{B}$ = 100 mT; T = 100 °C	f = 100 kHz; $\hat{B}$ = 200 mT; T = 100 °C	f = 500 kHz; $\hat{B}$ = 50 mT; T = 100 °C
3C92	≥320	≤ 1.5	≤ 8.6	–
3C94	≥320	≤ 1.5	≤ 8.6	–
3C96	≥315	≤ 1.1	≤ 6.5	≤ 5.4

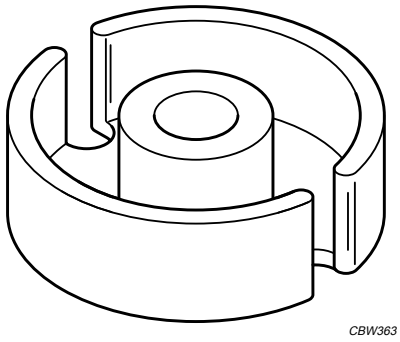
CBW363

PRODUCT OVERVIEW AND TYPE NUMBER STRUCTURE

Product overview PH cores

CORE TYPE	MASS (g)
PH5.6/3.6	0.2
PH7.4/3.9	0.4
PH9.4/4.8	0.7
PH14/7.5	3
PH26/9.2	12

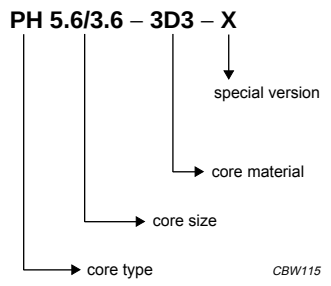

Fig.1 Type number structure for cores.

CORE HALF

Ordering information

GRADE	TYPE NUMBER
3D3	PH5.6/3.6-3D3

mass of core half ≈ 0.2 g

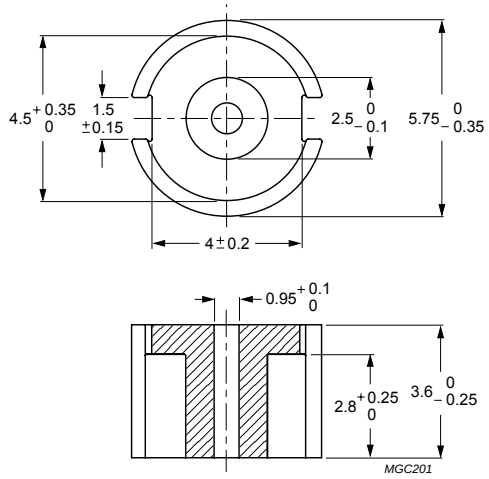

Dimensions in mm.

Fig.1 PH5.6/3.6 core half.

CORE HALF

Ordering information

GRADE	TYPE NUMBER
3D3	PH7.4/3.9-3D3

mass of core half ≈ 0.4 g

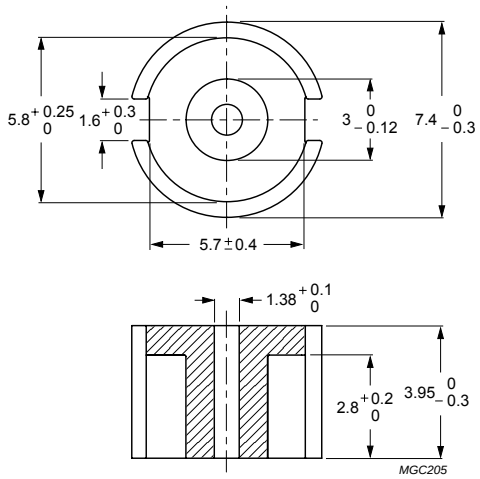

Dimensions in mm.

Fig.1 PH7.4/3.9 core half.

CORE HALF

Ordering information

GRADE	TYPE NUMBER
3D3	PH9.4/4.8-3D3

mass of core half ≈ 0.7 g

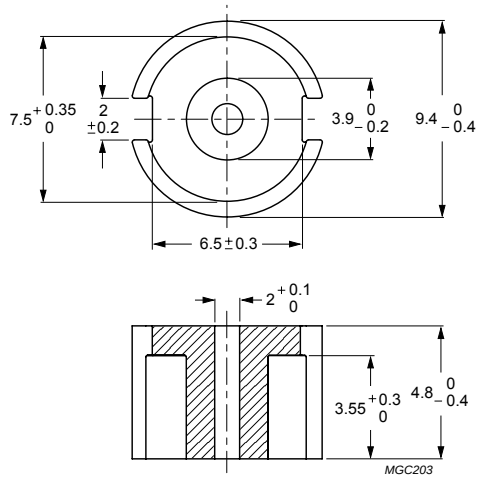

Dimensions in mm.

Fig.1 PH9.4/4.8 core half.

CORE HALF

Ordering information

GRADE	TYPE NUMBER
3D3	PH14/7.5-3D3

mass of core half ≈ 3 g

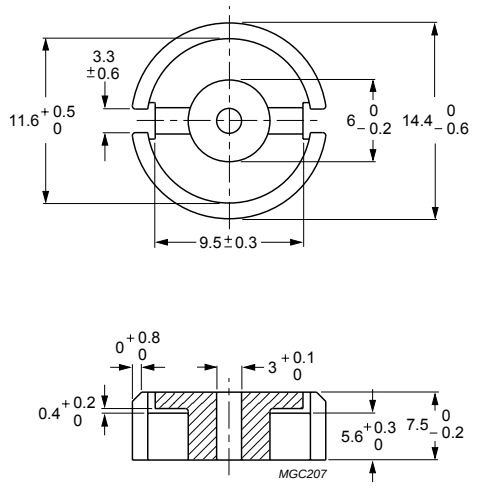

Dimensions in mm.

Fig.1 PH14/7.5 core half.

CORE HALF

Ordering information

GRADE	TYPE NUMBER
3D3	PH26/9.2-3D3

mass of core half ≈ 12 g

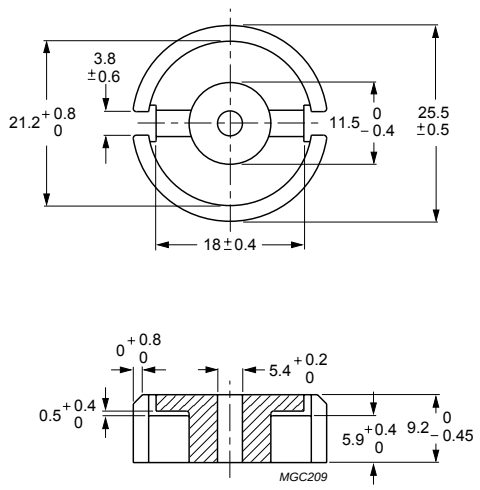

Dimensions in mm.

Fig.1 PH26/9.2 core half.

Soft Ferrites

MFP063

PRODUCT OVERVIEW AND TYPE NUMBER STRUCTURE

Product overview PM cores

CORE TYPE	V_e (mm^3)	A_e (mm^2)	MASS (g)
PM74/59	101000	790	460
PM87/70	133000	910	770
PM114/93	344000	1720	1940

- In accordance with IEC 62317, part 10.

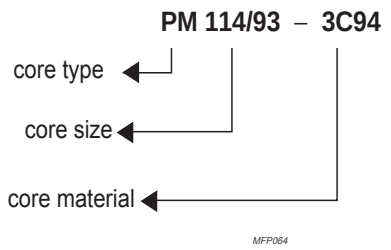

Fig.1 Type number structure for PM cores.

CORE SETS

Effective core parameters

SYMBOL	PARAMETER	VALUE	UNIT
$\Sigma(l/A)$	core factor (C1)	0.162	mm^{-1}
V_e	effective volume	101000	mm^3
l_e	effective length	128	mm
A_e	effective area	790	mm^2
A_{min}	minimum area	630	mm^2
m	mass of set	≈ 460	g

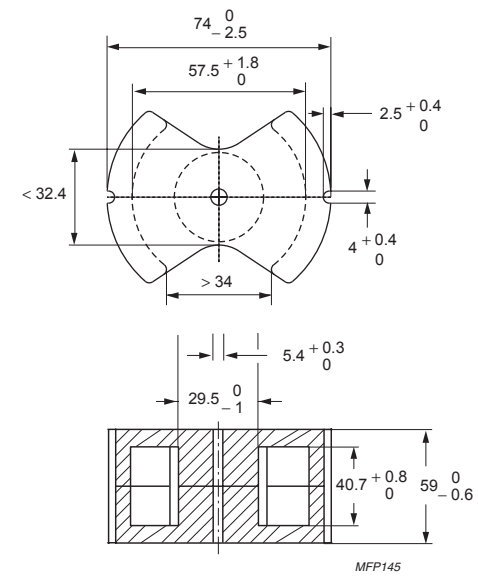

Dimensions in mm.

Fig.1 PM74/59 core set.

Core sets for general purpose transformers and power applications

Clamping force for A_L measurements, 1000 ± 200 N.

GRADE	A_L (nH)	μ_e	AIR GAP (μm)	TYPE NUMBER
3C90	14000 ± 25 %	≈ 1800	≈ 0	PM74/59-3C90
3C94	14000 ± 25 %	≈ 1800	≈ 0	PM74/59-3C94

Properties of core sets under power conditions

GRADE	B (mT) at	CORE LOSS (W) at	
	H = 250 A/m; f = 25 kHz; T = 100 °C	f = 25 kHz; $\hat{B}$ = 200 mT; T = 100 °C	f = 100 kHz; $\hat{B}$ = 100 mT; T = 100 °C
3C90	≥ 320	≤ 12	–
3C94	≥ 320	–	≤ 9.6

CORE SETS

Effective core parameters

SYMBOL	PARAMETER	VALUE	UNIT
$\Sigma(l/A)$	core factor (C1)	0.161	mm^{-1}
V_e	effective volume	133000	mm^3
l_e	effective length	146	mm
A_e	effective area	910	mm^2
A_{min}	minimum area	700	mm^2
m	mass of set	≈ 770	g

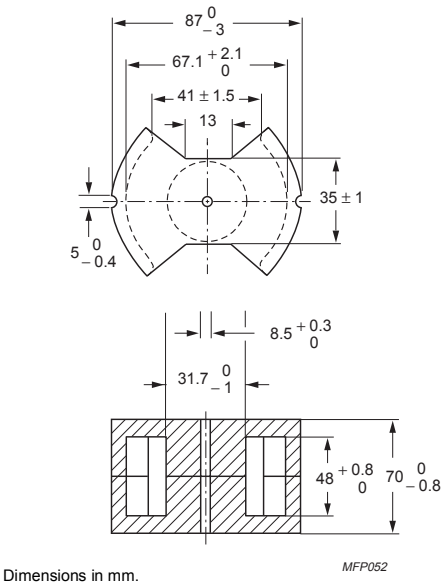

Dimensions in mm.

Fig.1 PM87/70 core set.

Core sets for general purpose transformers and power applications

Clamping force for A_L measurements, 1250 ± 250 N.

GRADE	A_L (nH)	μ_e	AIR GAP (μm)	TYPE NUMBER
3C90	15000 ± 25 %	≈ 1770	≈ 0	PM87/70-3C90
3C94	15000 ± 25 %	≈ 1770	≈ 0	PM87/70-3C94

Properties of core sets under power conditions

GRADE	B (mT) at	CORE LOSS (W) at
	H = 250 A/m; f = 25 kHz; T = 100 °C	**f = 25 kHz; $\hat{B}$ = 200 mT; T = 100 °C**
3C90	≥ 320	≤ 20
3C94	≥ 315	≤ 16

CORE SETS

Effective core parameters

SYMBOL	PARAMETER	VALUE	UNIT
$\Sigma(l/A)$	core factor (C1)	0.116	mm^{-1}
V_e	effective volume	344000	mm^3
l_e	effective length	200	mm
A_e	effective area	1720	mm^2
A_{min}	minimum area	1380	mm^2
m	mass of set	≈ 1940	g

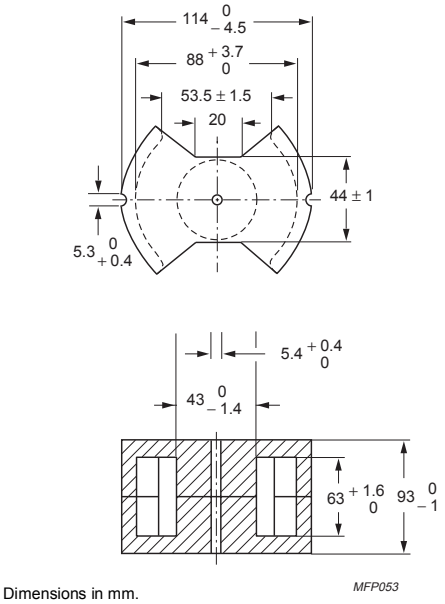

Dimensions in mm.

Fig.1 PM114/93 core set.

Core sets for general purpose transformers and power applications

Clamping force for A_L measurements, 2500 ± 500 N.

GRADE	A_L (nH)	μ_e	AIR GAP (μm)	TYPE NUMBER
3C90	20000 ± 25 %	≈ 1850	≈ 0	PM114/93-3C90
3C94	20000 ± 25 %	≈ 1850	≈ 0	PM114/93-3C94

Properties of core sets under power conditions

GRADE	B (mT) at	CORE LOSS (W) at
	H = 250 A/m; f = 25 kHz; T = 100 °C	f = 25 kHz; $\hat{B}$ = 100 mT; T = 100 °C
3C90	≥ 320	≤ 12
3C94	≥ 315	≤ 9

Soft Ferrites

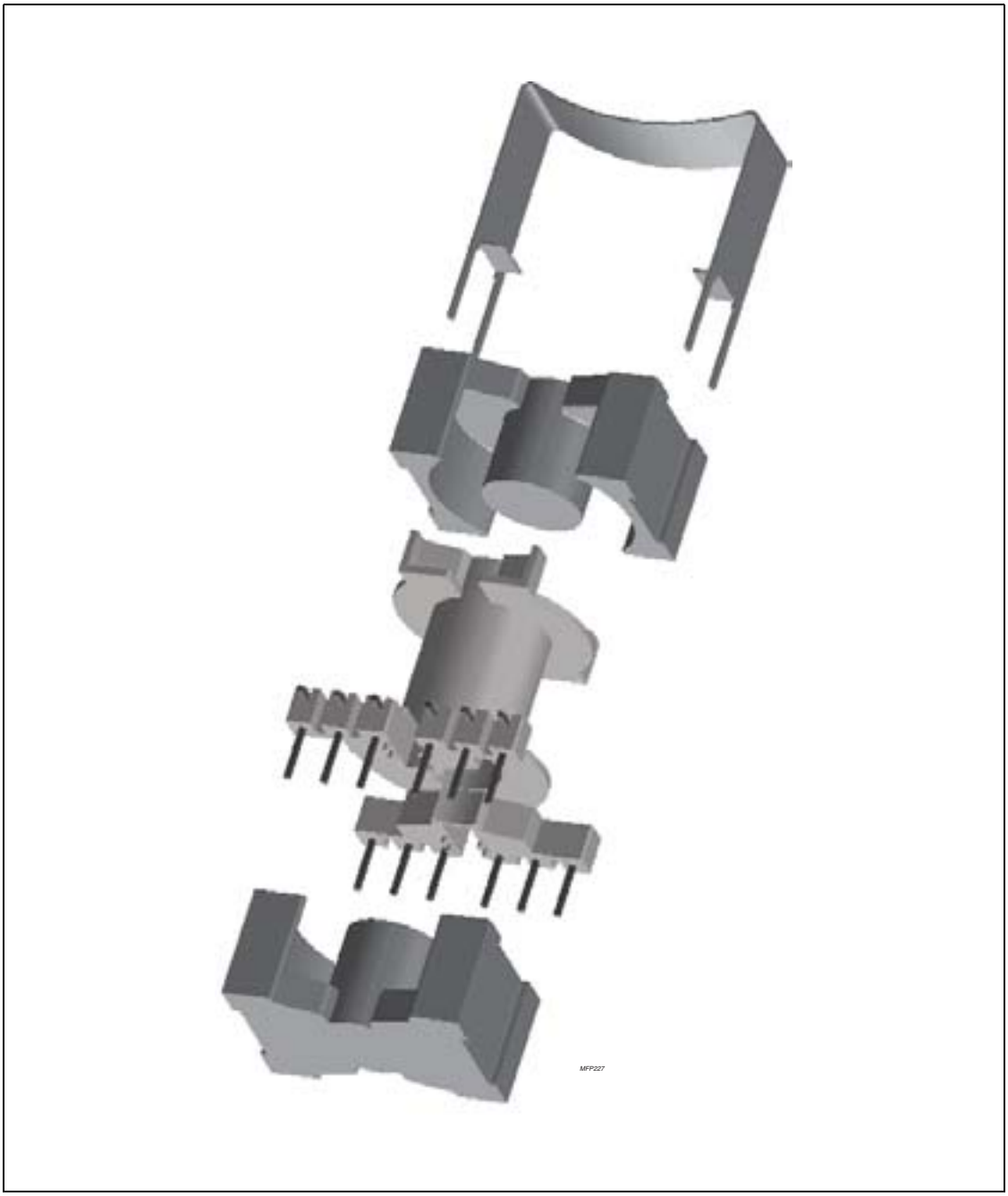
MFP227

PRODUCT OVERVIEW AND TYPE NUMBER STRUCTURE

Product overview PQ cores

CORE TYPE	V_e (mm^3)	A_e (mm^2)	MASS (g)
PQ20/16	2330	61.9	13
PQ20/20	2850	62.6	16
PQ26/20	5820	121	30
PQ26/25	6530	120	36
PQ32/20	9440	169	43
PQ32/30	12500	167	57
PQ35/35	16300	190	73
PQ40/40	20500	201	97
PQ50/50	37100	328	195

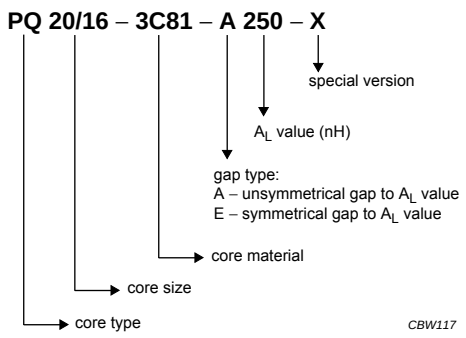

Fig.1 Type number structure for cores.

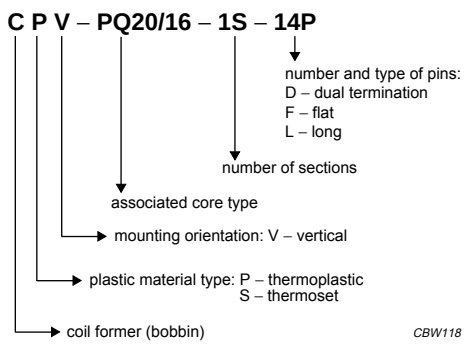

Fig.2 Type number structure for coil formers.

CORE SETS

Effective core parameters

SYMBOL	PARAMETER	VALUE	UNIT
Σ(l/A)	core factor (C1)	0.607	mm^{-1}
V_e	effective volume	2330	mm^3
l_e	effective length	37.6	mm
A_e	effective area	61.9	mm^2
A_{min}	minimum area	59.1	mm^2
m	mass of set	≈ 13	g

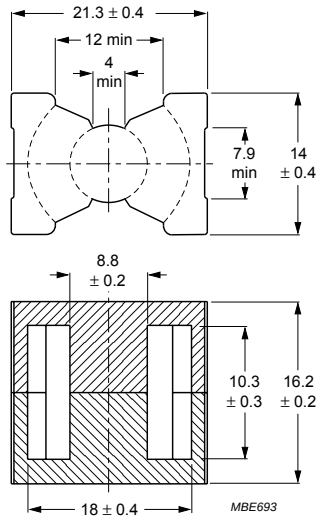

Dimensions in mm.

Fig.1 PQ20/16 core set.

Core sets for general purpose transformers and power applications

Clamping force for A_L measurements, 30 ±10 N.

GRADE	A_L (nH)	μ_e	AIR GAP (μm)	TYPE NUMBER
3C81	160 ±3%	≈ 77	≈ 600	PQ20/16-3C81-A160
	250 ±3%	≈ 121	≈ 350	PQ20/16-3C81-A250
	315 ±3%	≈ 152	≈ 270	PQ20/16-3C81-A315
	400 ±3%	≈ 193	≈ 200	PQ20/16-3C81-A400
	630 ±5%	≈ 305	≈ 120	PQ20/16-3C81-A630
	4080 ±25%	≈ 1970	≈ 0	PQ20/16-3C81
3C90	160 ±3%	≈ 77	≈ 600	PQ20/16-3C90-A160
	250 ±3%	≈ 121	≈ 350	PQ20/16-3C90-A250
	315 ±3%	≈ 152	≈ 270	PQ20/16-3C90-A315
	400 ±3%	≈ 193	≈ 200	PQ20/16-3C90-A400
	630 ±5%	≈ 305	≈ 120	PQ20/16-3C90-A630
	3600 ±25%	≈ 1740	≈ 0	PQ20/16-3C90
3C91 des	4080 ±25%	≈ 1970	≈ 0	PQ20/16-3C91
3C94	3600 ±25%	≈ 1740	≈ 0	PQ20/16-3C94
3C95 des	4080 ±25%	≈ 1970	≈ 0	PQ20/16-3C95
3C96 des	3250 ±25%	≈ 1570	≈ 0	PQ20/16-3C96

GRADE	A_L (nH)	μ_e	AIR GAP (μm)	TYPE NUMBER
3F3	160 ±3%	≈ 77	≈ 600	PQ20/16-3F3-A160
	250 ±3%	≈ 121	≈ 350	PQ20/16-3F3-A250
	315 ±3%	≈ 152	≈ 270	PQ20/16-3F3-A315
	400 ±3%	≈ 193	≈ 200	PQ20/16-3F3-A400
	630 ±5%	≈ 305	≈ 120	PQ20/16-3F3-A630
	3080 ±25%	≈ 1490	≈ 0	PQ20/16-3F3

Properties of core sets under power conditions

GRADE	B (mT) at	CORE LOSS (W) at					
	H = 250 A/m; f = 25 kHz; T = 100 °C	f = 25 kHz; $\hat{B}$ = 200 mT; T = 100 °C	f = 100 kHz; $\hat{B}$ = 100 mT; T = 100 °C	f = 100 kHz; $\hat{B}$ = 200 mT; T = 25 °C	f = 100 kHz; $\hat{B}$ = 200 mT; T = 100 °C	f = 400 kHz; $\hat{B}$ = 50 mT; T = 100 °C	f = 500 kHz; $\hat{B}$ = 50 mT; T = 100 °C
3C81	≥320	≤ 0.54	–	–	–	–	–
3C90	≥320	≤ 0.28	≤ 0.3	–	–	–	–
3C91	≥320	–	≤ 0.16[1]	–	≤ 1.1[1]	–	–
3C94	≥320	–	≤ 0.22	–	≤ 1.4	–	–
3C95	≥320	–	–	≤ 1.37	≤ 1.3	–	–
3C96	≥340	–	≤ 0.16	–	≤ 1.1	≤ 0.43	≤ 0.9
3F3	≥320	–	≤ 0.26	–	–	≤ 0.44	–

Note

1. Measured at 60 °C.

COIL FORMER

General data 14-pins PQ20/16 coil former

PARAMETER	SPECIFICATION
Coil former material	thermoplastic polyester, glass-reinforced, flame retardant in accordance with *"UL 94V-0"*; UL file number E41938
Pin material	copper-tin alloy (CuSn), tin (Sn) plated
Maximum operating temperature	180 °C, *"IEC 60085"*, class H
Resistance to soldering heat	*"IEC 60068-2-20"*, Part 2, Test Tb, method 1B, 350 °C, 3.5 s
Solderability	*"IEC 60068-2-20"*, Part 2, Test Ta, method 1

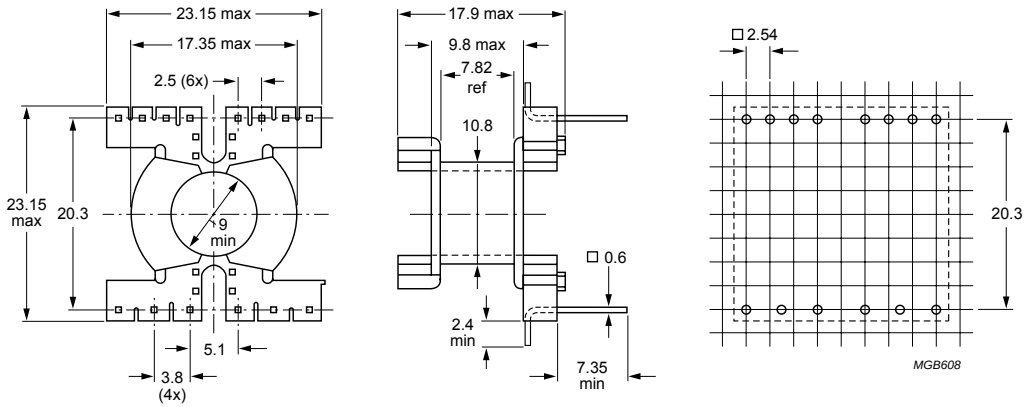

Dimensions in mm.

Fig.2 PQ20/16 coil former; 14-pins.

Winding data and area product for 14-pins PQ20/16 coil former

NUMBER OF SECTIONS	MINIMUM WINDING AREA (mm^2)	NOMINAL WINDING WIDTH (mm)	AVERAGE LENGTH OF TURN (mm)	AREA PRODUCT Ae x Aw (mm^4)	TYPE NUMBER
1	23.5	7.95	44.0	1450	CPV-PQ20/16-1S-14P
1	23.5	7.95	44.0	1450	CPV-PQ20/16-1S-14PD

MOUNTING PARTS

General data

ITEM	REMARKS	TYPE NUMBER
Clamp	phosphorbronze, Sn plated, earth pins solderability acc. to *"IEC 60068-2-20"*, Part 2, Test Ta, method 1: 235 °C, 2 s	CLM/P-PQ20/16

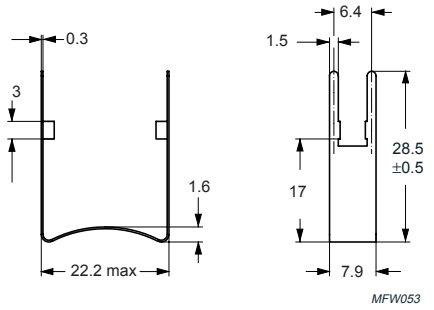

Dimensions in mm.

Fig.3 Clamp CLM/P-PQ20/16

CORE SETS

Effective core parameters

SYMBOL	PARAMETER	VALUE	UNIT
Σ(l/A)	core factor (C1)	0.731	mm^{-1}
V_e	effective volume	2850	mm^3
l_e	effective length	45.7	mm
A_e	effective area	62.6	mm^2
A_{min}	minimum area	59.1	mm^2
m	mass of set	≈ 16	g

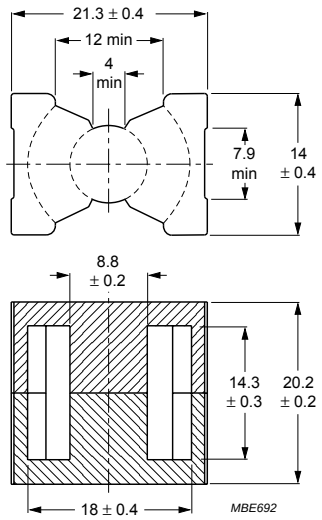

Dimensions in mm.

Fig.1 PQ20/20 core set.

Core sets for general purpose transformers and power applications

Clamping force for A_L measurements, 30 ±10 N.

GRADE	A_L (nH)	μ_e	AIR GAP (μm)	TYPE NUMBER
3C81	160 ±3%	≈ 93	≈ 620	PQ20/20-3C81-A160
	250 ±3%	≈ 145	≈ 360	PQ20/20-3C81-A250
	315 ±3%	≈ 183	≈ 270	PQ20/20-3C81-A315
	400 ±3%	≈ 232	≈ 200	PQ20/20-3C81-A400
	630 ±5%	≈ 366	≈ 120	PQ20/20-3C81-A630
	3580 ±25%	≈ 2080	≈ 0	PQ20/20-3C81
3C90	160 ±3%	≈ 93	≈ 620	PQ20/20-3C90-A160
	250 ±3%	≈ 145	≈ 360	PQ20/20-3C90-A250
	315 ±3%	≈ 183	≈ 270	PQ20/20-3C90-A315
	400 ±3%	≈ 232	≈ 200	PQ20/20-3C90-A400
	630 ±5%	≈ 366	≈ 120	PQ20/20-3C90-A630
	3150 ±25%	≈ 1830	≈ 0	PQ20/20-3C90
3C91 des	3580 ±25%	≈ 2080	≈ 0	PQ20/20-3C91
3C94	3150 ±25%	≈ 1830	≈ 0	PQ20/20-3C94
3C95 des	3580 ±25%	≈ 2080	≈ 0	PQ20/20-3C95
3C96 des	2820 ±25%	≈ 1640	≈ 0	PQ20/20-3C96

GRADE	A_L (nH)	μ_e	AIR GAP (μm)	TYPE NUMBER
3F3	160 ±3%	≈ 93	≈ 620	PQ20/20-3F3-A160
	250 ±3%	≈ 145	≈ 360	PQ20/20-3F3-A250
	315 ±3%	≈ 183	≈ 270	PQ20/20-3F3-A315
	400 ±3%	≈ 232	≈ 200	PQ20/20-3F3-A400
	630 ±5%	≈ 366	≈ 120	PQ20/20-3F3-A630
	2650 ±25%	≈ 1540	≈ 0	PQ20/20-3F3

Properties of core sets under power conditions

GRADE	B (mT) at	CORE LOSS (W) at					
	H = 250 A/m; f = 25 kHz; T = 100 °C	f = 25 kHz; $\hat{B}$ = 200 mT; T = 100 °C	f = 100 kHz; $\hat{B}$ = 100 mT; T = 100 °C	f = 100 kHz; $\hat{B}$ = 200 mT; T = 25 °C	f = 100 kHz; $\hat{B}$ = 200 mT; T = 100 °C	f = 400 kHz; $\hat{B}$ = 50 mT; T = 100 °C	f = 500 kHz; $\hat{B}$ = 50 mT; T = 100 °C
3C81	≥320	≤ 0.66	–	–	–	–	–
3C90	≥320	≤ 0.35	≤ 0.37	–	–	–	–
3C91	≥320	–	≤ 0.2[1]	–	≤ 1.3[1]	–	–
3C94	≥320	–	≤ 0.27	–	≤ 1.7	–	–
3C95	≥320	–	–	≤ 1.68	≤ 1.6	–	–
3C96	≥340	–	≤ 0.2	–	≤ 1.3	≤ 0.53	≤ 1.1
3F3	≥320	–	≤ 0.31	–	–	≤ 0.54	–

Note

1. Measured at 60 °C.

COIL FORMER

General data 14-pins PQ20/20 coil former

PARAMETER	SPECIFICATION
Coil former material	Polyethylene terephtalate (PET), glass-reinforced, flame retardant in accordance with *"UL 94V-0"*; UL file number E41938
Pin material	copper-tin alloy (CuSn), tin (Sn) plated
Maximum operating temperature	180 °C, *"IEC 60085"*, class H
Resistance to soldering heat	*"IEC 60068-2-20"*, Part 2, Test Tb, method 1B, 350 °C, 3.5 s
Solderability	*"IEC 60068-2-20"*, Part 2, Test Ta, method 1

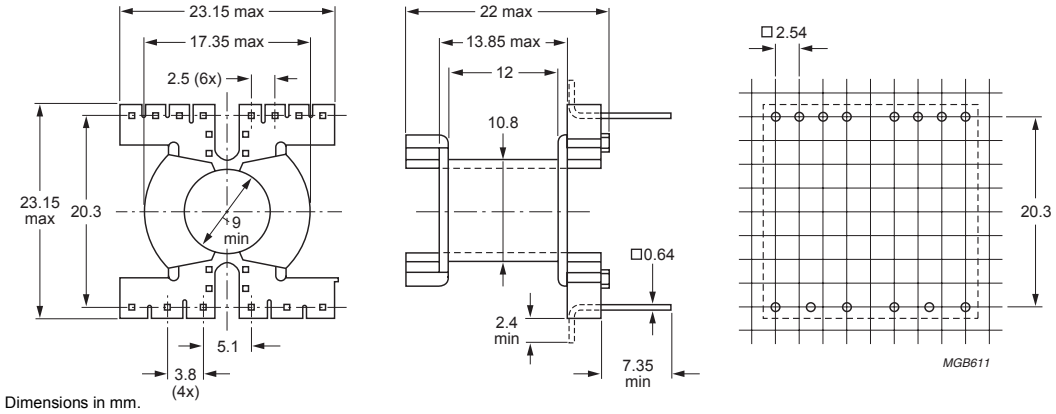

Dimensions in mm.

Fig.2 PQ20/20 coil former; 14-pins.

Winding data and area product for 14-pins PQ20/20 coil former

NUMBER OF SECTIONS	MINIMUM WINDING AREA (mm^2)	NOMINAL WINDING WIDTH (mm)	AVERAGE LENGTH OF TURN (mm)	AREA PRODUCT Ae x Aw (mm^4)	TYPE NUMBER
1	36.0	12.0	44.0	2250	CPV-PQ20/20-1S-14P-Z
1	36.0	12.0	44.0	2250	CPV-PQ20/20-1S-14PD-Z

MOUNTING PARTS

General data

ITEM	REMARKS	TYPE NUMBER
Clamp	phosphorbronze, Sn plated, earth pins solderability acc. to *"IEC 60068-2-20"*, Part 2, Test Ta, method 1: 235 °C, 2 s	CLM/P-PQ20/20

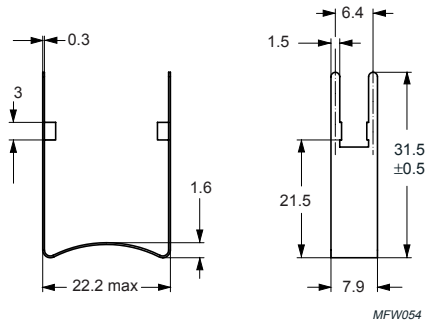

Dimensions in mm.

Fig.3 Clamp CLM/P-PQ20/20

CORE SETS

Effective core parameters

SYMBOL	PARAMETER	VALUE	UNIT
Σ(l/A)	core factor (C1)	0.372	mm^{-1}
V_e	effective volume	5470	mm^3
l_e	effective length	45.0	mm
A_e	effective area	121	mm^2
A_{min}	minimum area	109	mm^2
m	mass of set	≈ 30	g

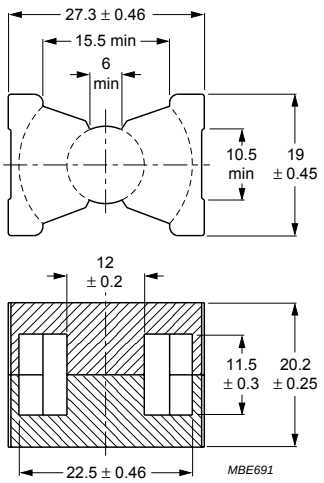

Dimensions in mm.

Fig.1 PQ26/20 core set.

Core sets for general purpose transformers and power applications

Clamping force for A_L measurements, 60 ±15 N.

GRADE	A_L (nH)	μ_e	TOTAL AIR GAP (μm)	TYPE NUMBER
3C81	250 ±3%	≈ 74	≈ 730	PQ26/20-3C81-E250
	315 ±3%	≈ 93	≈ 550	PQ26/20-3C81-A315
	400 ±3%	≈ 118	≈ 420	PQ26/20-3C81-A400
	630 ±3%	≈ 186	≈ 250	PQ26/20-3C81-A630
	1000 ±5%	≈ 296	≈ 140	PQ26/20-3C81-A1000
	7020 ±25%	≈ 2080	≈ 0	PQ26/20-3C81
3C90	250 ±3%	≈ 74	≈ 730	PQ26/20-3C90-E250
	315 ±3%	≈ 93	≈ 550	PQ26/20-3C90-A315
	400 ±3%	≈ 118	≈ 420	PQ26/20-3C90-A400
	630 ±3%	≈ 186	≈ 250	PQ26/20-3C90-A630
	1000 ±5%	≈ 296	≈ 140	PQ26/20-3C90-A1000
	6200 ±25%	≈ 1640	≈ 0	PQ26/20-3C90
3C91 des	7020 ±25%	≈ 2080	≈ 0	PQ26/20-3C91
3C94	6200 ±25%	≈ 1640	≈ 0	PQ26/20-3C94
3C95 des	7020 ±25%	≈ 2080	≈ 0	PQ26/20-3C95
3C96 des	5530 ±25%	≈ 1640	≈ 0	PQ26/20-3C96

GRADE	A_L (nH)	μ_e	TOTAL AIR GAP (μm)	TYPE NUMBER
3F3	250 ±3%	≈ 74	≈ 730	PQ26/20-3F3-E250
	315 ±3%	≈ 93	≈ 550	PQ26/20-3F3-A315
	400 ±3%	≈ 118	≈ 420	PQ26/20-3F3-A400
	630 ±3%	≈ 186	≈ 250	PQ26/20-3F3-A630
	1000 ±5%	≈ 296	≈ 140	PQ26/20-3F3-A1000
	5200 ±25%	≈ 1540	≈ 0	PQ26/20-3F3

Properties of core sets under power conditions

GRADE	B (mT) at	CORE LOSS (W) at				
	H = 250 A/m; f = 25 kHz; T = 100 °C	f = 25 kHz; $\hat{B}$ = 200 mT; T = 100 °C	f = 100 kHz; $\hat{B}$ = 100 mT; T = 100 °C	f = 100 kHz; $\hat{B}$ = 200 mT; T = 25 °C	f = 100 kHz; $\hat{B}$ = 200 mT; T = 100 °C	f = 400 kHz; $\hat{B}$ = 50 mT; T = 100 °C
3C81	≥320	≤ 1.3	–	–	–	–
3C90	≥320	≤ 0.66	≤ 0.7	–	–	–
3C91	≥320	–	≤ 0.42[1]	–	≤ 2.5[1]	–
3C94	≥320	–	≤ 0.52	–	≤ 3.3	–
3C95	≥320	–	–	≤ 3.23	≤ 3.06	–
3C96	≥340	–	≤ 0.42	–	≤ 2.5	≤ 1.0
3F3	≥320	–	≤ 0.64	–	–	≤ 1.1

Properties of core sets under power conditions (continued)

GRADE	B (mT) at	CORE LOSS (W) at			
	H = 250 A/m; f = 25 kHz; T = 100 °C	f = 500 kHz; $\hat{B}$ = 50 mT; T = 100 °C	f = 500 kHz; $\hat{B}$ = 100 mT; T = 100 °C	f = 1 MHz; $\hat{B}$ = 30 mT; T = 100 °C	f = 3 MHz; $\hat{B}$ = 10 mT; T = 100 °C
3C81	≥320	–	–	–	–
3C90	≥320	–	–	–	–
3C91	≥320	–	–	–	–
3C94	≥320	–	–	–	–
3C95	≥320	–	–	–	–
3C96	≥340	≤ 2.1	–	–	–
3F3	≥320	–	–	–	–

Note

1. Measured at 60 °C.

COIL FORMER

General data 12-pins PQ26/20 coil former

ITEM	SPECIFICATION
Coil former material	Polyethylene terephtalate (PET), glass-reinforced, flame retardant in accordance with *"UL 94V-0"*; UL file number E41938
Pin material	copper-tin alloy (CuSn), tin (Sn) plated
Maximum operating temperature	180 °C, *"IEC 60085"*, class H
Resistance to soldering heat	*"IEC 60068-2-20"*, Part 2, Test Tb, method 1B, 350 °C, 3.5 s
Solderability	*"IEC 60068-2-20"*, Part 2, Test Ta, method 1

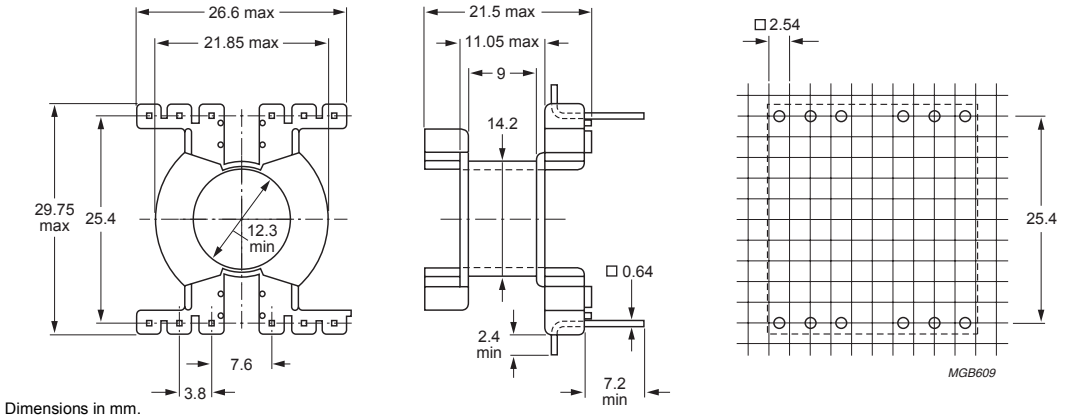

Dimensions in mm.

Fig.2 PQ26/20 coil former; 12-pins.

Winding data and area product for 12-pins PQ26/20 coil former

NUMBER OF SECTIONS	MINIMUM WINDING AREA (mm^2)	NOMINAL WINDING WIDTH (mm)	AVERAGE LENGTH OF TURN (mm)	AREA PRODUCT Ae x Aw (mm^4)	TYPE NUMBER
1	31.1	9.0	56.4	3760	CPV-PQ26/20-1S-12P-Z
1	31.1	9.0	56.4	3760	CPV-PQ26/20-1S-12PD-Z

MOUNTING PARTS

General data

ITEM	REMARKS	TYPE NUMBER
Clamp	phosphorbronze, Sn plated, earth pins solderability acc. to *"IEC 60068-2-20"*, Part 2, Test Ta, method 1: 235 °C, 2 s	CLM/P-PQ26/20

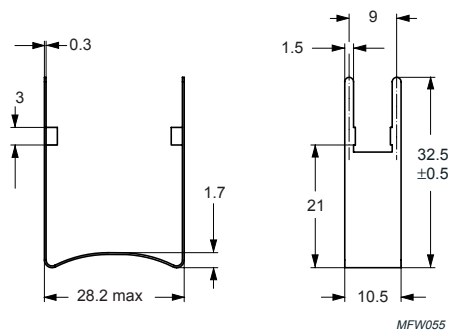

Dimensions in mm.

Fig.3 Clamp CLM/P-PQ26/20

CORE SETS

Effective core parameters

SYMBOL	PARAMETER	VALUE	UNIT
Σ(l/A)	core factor (C1)	0.451	mm^{-1}
V_e	effective volume	6530	mm^3
l_e	effective length	54.3	mm
A_e	effective area	120	mm^2
A_{min}	minimum area	108	mm^2
m	mass of set	≈ 36	g

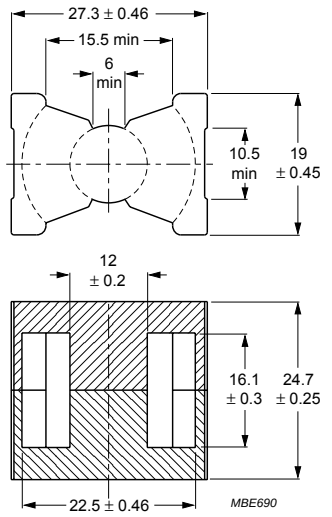

Dimensions in mm.

Fig.1 PQ26/25 core set.

Core sets for general purpose transformers and power applications

Clamping force for A_L measurements, 60 ±15 N.

GRADE	A_L (nH)	μ_e	TOTAL AIR GAP (μm)	TYPE NUMBER
3C81	250 ±3%	≈ 90	≈ 730	PQ26/25-3C81-E250
	315 ±3%	≈ 113	≈ 550	PQ26/25-3C81-A315
	400 ±3%	≈ 144	≈ 420	PQ26/25-3C81-A400
	630 ±3%	≈ 227	≈ 240	PQ26/25-3C81-A630
	1000 ±5%	≈ 360	≈ 140	PQ26/25-3C81-A1000
	6010 ±25%	≈ 2160	≈ 0	PQ26/25-3C81
3C90	250 ±3%	≈ 90	≈ 730	PQ26/25-3C90-E250
	315 ±3%	≈ 113	≈ 550	PQ26/25-3C90-A315
	400 ±3%	≈ 144	≈ 420	PQ26/25-3C90-A400
	630 ±3%	≈ 227	≈ 240	PQ26/25-3C90-A630
	1000 ±5%	≈ 360	≈ 140	PQ26/25-3C90-A1000
	5250 ±25%	≈ 1890	≈ 0	PQ26/25-3C90
3C91 des	6010 ±25%	≈ 2160	≈ 0	PQ26/25-3C91
3C94	5250 ±25%	≈ 1890	≈ 0	PQ26/25-3C94
3C95 des	6010 ±25%	≈ 2160	≈ 0	PQ26/25-3C95
3C96 des	4700 ±25%	≈ 1690	≈ 0	PQ26/25-3C96

GRADE	A_L (nH)	μ_e	TOTAL AIR GAP (μm)	TYPE NUMBER
3F3	250 ±3%	≈ 90	≈ 730	PQ26/25-3F3-E250
	315 ±3%	≈ 113	≈ 550	PQ26/25-3F3-A315
	400 ±3%	≈ 144	≈ 420	PQ26/25-3F3-A400
	630 ±3%	≈ 227	≈ 240	PQ26/25-3F3-A630
	1000 ±5%	≈ 360	≈ 140	PQ26/25-3F3-A1000
	4390 ±25%	≈ 1574	≈ 0	PQ26/25-3F3

Properties of core sets under power conditions

GRADE	B (mT) at	CORE LOSS (W) at					
	H = 250 A/m; f = 25 kHz; T = 100 °C	f = 25 kHz; $\hat{B}$ = 200 mT; T = 100 °C	f = 100 kHz; $\hat{B}$ = 100 mT; T = 100 °C	f = 100 kHz; $\hat{B}$ = 200 mT; T = 25 °C	f = 100 kHz; $\hat{B}$ = 200 mT; T = 100 °C	f = 400 kHz; $\hat{B}$ = 50 mT; T = 100 °C	f = 500 kHz; $\hat{B}$ = 50 mT; T = 100 °C
3C81	≥320	≤ 1.5	–	–	–	–	–
3C90	≥320	≤ 0.79	≤ 0.83	–	–	–	–
3C91	≥320	–	≤ 0.5[1]	–	≤ 3.2[1]	–	–
3C94	≥320	–	≤ 0.62	–	≤ 4.0	–	–
3C95	≥320	–	–	≤ 3.85	≤ 3.66	–	–
3C96	≥340	–	≤ 0.5	–	≤ 3.2	≤ 1.15	≤ 2.5
3F3	≥320	–	≤ 0.72	–	–	≤ 1.2	–

Note

1. Measured at 60 °C.

COIL FORMER

General data 12-pins PQ26/25 coil former

PARAMETER	SPECIFICATION
Coil former material	Polyethylene terephtalate (PET), glass-reinforced, flame retardant in accordance with *"UL 94V-0"*; UL file number E41938
Pin material	copper-tin alloy (CuSn), tin (Sn) plated
Maximum operating temperature	180 °C, *"IEC 60085"*, class H
Resistance to soldering heat	*"IEC 60068-2-20"*, Part 2, Test Tb, method 1B, 350 °C, 3.5 s
Solderability	*"IEC 60068-2-20"*, Part 2, Test Ta, method 1

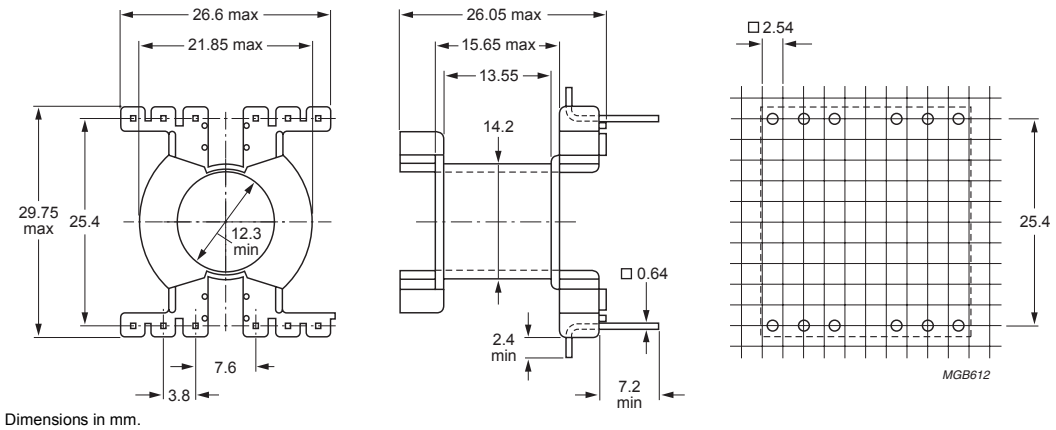

Dimensions in mm.

Fig.2 PQ26/25 coil former; 12-pins.

Winding data and area product for 12-pins PQ26/25 coil former

NUMBER OF SECTIONS	MINIMUM WINDING AREA (mm^2)	NOMINAL WINDING WIDTH (mm)	AVERAGE LENGTH OF TURN (mm)	AREA PRODUCT Ae x Aw (mm^4)	TYPE NUMBER
1	47.5	13.6	56.4	5700	CPV-PQ26/25-1S-12P-Z
1	47.5	13.6	56.4	5700	CPV-PQ26/25-1S-12PD-Z

MOUNTING PARTS

General data

ITEM	REMARKS	TYPE NUMBER
Clamp	phosphorbronze, Sn plated, earth pins solderability acc. to *"IEC 60068-2-20"*, Part 2, Test Ta, method 1: 235 °C, 2 s	CLM/P-PQ26/25

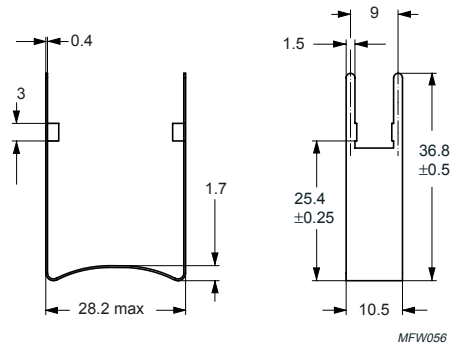

Dimensions in mm.

Fig.3 Clamp CLM/P-PQ26/25

CORE SETS

Effective core parameters

SYMBOL	PARAMETER	VALUE	UNIT
$\Sigma(l/A)$	core factor (C1)	0.331	mm^{-1}
V_e	effective volume	9440	mm^3
l_e	effective length	55.9	mm
A_e	effective area	169	mm^2
A_{min}	minimum area	142	mm^2
m	mass of set	≈ 43	g

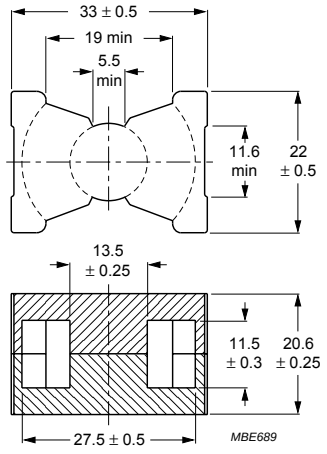

Dimensions in mm.

Fig.1 PQ32/20 core set.

Core sets for general purpose transformers and power applications

Clamping force for A_L measurements, 80 ±20 N.

GRADE	A_L (nH)	μ_e	TOTAL AIR GAP (μm)	TYPE NUMBER
3C81	315 ±3%	≈ 83	≈ 790	PQ32/20-3C81-E315
	400 ±3%	≈ 105	≈ 600	PQ32/20-3C81-A400
	630 ±3%	≈ 166	≈ 350	PQ32/20-3C81-A630
	1000 ±3%	≈ 263	≈ 210	PQ32/20-3C81-A1000
	1600 ±5%	≈ 421	≈ 120	PQ32/20-3C81-A1600
	7560 ±25%	≈ 1990	≈ 0	PQ32/20-3C81
3C90	315 ±3%	≈ 83	≈ 790	PQ32/20-3C90-E315
	400 ±3%	≈ 105	≈ 600	PQ32/20-3C90-A400
	630 ±3%	≈ 166	≈ 350	PQ32/20-3C90-A630
	1000 ±3%	≈ 263	≈ 210	PQ32/20-3C90-A1000
	1600 ±5%	≈ 421	≈ 120	PQ32/20-3C90-A1600
	6800 ±25%	≈ 1790	≈ 0	PQ32/20-3C90
3C91 des	7560 ±25%	≈ 1990	≈ 0	PQ32/20-3C91
3C94	6800 ±25%	≈ 1790	≈ 0	PQ32/20-3C94
3C95 des	7560 ±25%	≈ 1990	≈ 0	PQ32/20-3C95
3C96 des	6000 ±25%	≈ 1580	≈ 0	PQ32/20-3C96

GRADE	A_L (nH)	μ_e	TOTAL AIR GAP (μm)	TYPE NUMBER
3F3	315 ±3%	≈ 83	≈ 790	PQ32/20-3F3-E315
	400 ±3%	≈ 105	≈ 600	PQ32/20-3F3-A400
	630 ±3%	≈ 166	≈ 350	PQ32/20-3F3-A630
	1000 ±3%	≈ 263	≈ 210	PQ32/20-3F3-A1000
	1600 ±5%	≈ 421	≈ 120	PQ32/20-3F3-A1600
	6000 ±25%	≈ 1580	≈ 0	PQ32/20-3F3

Properties of core sets under power conditions

GRADE	B (mT) at	CORE LOSS (W) at					
	H = 250 A/m; f = 25 kHz; T = 100 °C	f = 25 kHz; $\hat{B}$ = 200 mT; T = 100 °C	f = 100 kHz; $\hat{B}$ = 100 mT; T = 100 °C	f = 100 kHz; $\hat{B}$ = 200 mT; T = 25 °C	f = 100 kHz; $\hat{B}$ = 200 mT; T = 100 °C	f = 400 kHz; $\hat{B}$ = 50 mT; T = 100 °C	f = 500 kHz; $\hat{B}$ = 50 mT; T = 100 °C
3C81	≥320	≤ 1.9	–	–	–	–	–
3C90	≥320	≤ 1.2	≤ 1.3	–	–	–	–
3C91	≥320	–	≤ 0.7[1]	–	≤ 4.4[1]	–	–
3C94	≥320	–	≤ 0.9	–	≤ 5.5	–	–
3C95	≥320	–	–	≤ 5.57	≤ 5.29	–	–
3C96	≥340	–	≤ 0.7	–	≤ 4.4	≤ 1.7	≤ 3.5
3F3	≥320	–	≤ 1.0	–	–	≤ 1.8	–

Note

1. Measured at 60 °C.

COIL FORMER

General data 12-pins PQ32/20 coil former

PARAMETER	SPECIFICATION
Coil former material	Polyethylene terephtalate (PET), glass-reinforced, flame retardant in accordance with *"UL 94V-0"*; UL file number E41938
Pin material	copper-tin alloy (CuSn), tin (Sn) plated
Maximum operating temperature	180 °C, *"IEC 60085"*, class H
Resistance to soldering heat	*"IEC 6068-2-20"*, Part 2, Test Tb, method 1B, 350 °C, 3.5 s
Solderability	*"IEC 60068-2-20"*, Part 2, Test Ta, method 1

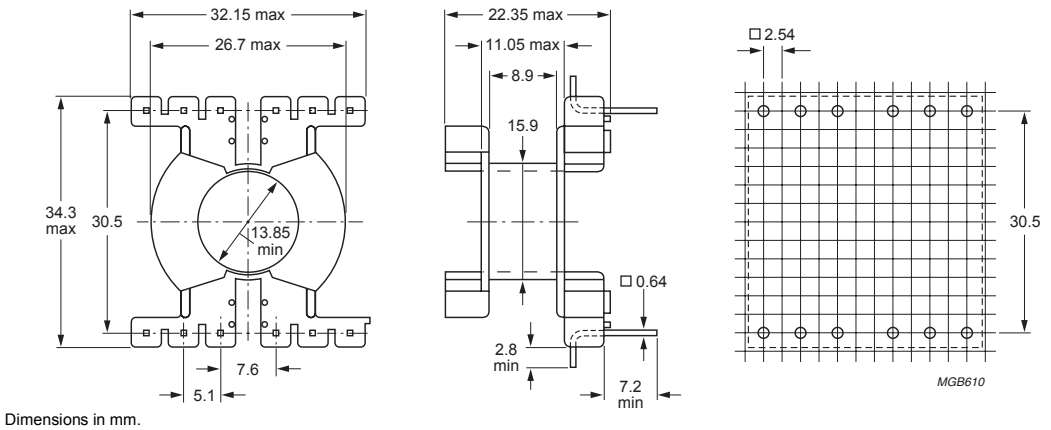

Dimensions in mm.

Fig.2 PQ32/20 coil former; 12-pins.

Winding data and area product for 12-pins PQ32/20 coil former

NUMBER OF SECTIONS	MINIMUM WINDING AREA (mm^2)	NOMINAL WINDING WIDTH (mm)	AVERAGE LENGTH OF TURN (mm)	AREA PRODUCT Ae x Aw (mm^4)	TYPE NUMBER
1	44.8	8.9	66.7	7570	CPV-PQ32/20-1S-12P-Z
1	44.8	8.9	66.7	7570	CPV-PQ32/20-1S-12PD-Z

MOUNTING PARTS

General data

ITEM	REMARKS	TYPE NUMBER
Clamp	phosphorbronze, Sn plated, earth pins solderability acc. to *"IEC 60068-2-20"*, Part 2, Test Ta, method 1: 235 °C, 2 s	CLM/P-PQ32/20

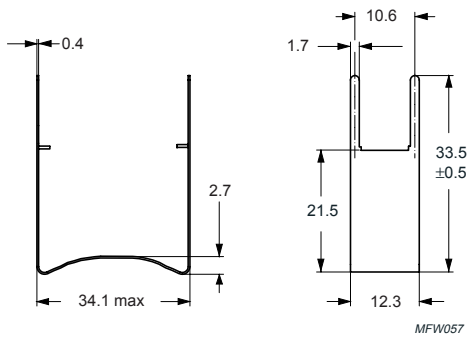

Dimensions in mm.

Fig.3 Clamp CLM/P-PQ32/20

CORE SETS

Effective core parameters

SYMBOL	PARAMETER	VALUE	UNIT
Σ(l/A)	core factor (C1)	0.447	mm^{-1}
V_e	effective volume	12500	mm^3
l_e	effective length	74.7	mm
A_e	effective area	167	mm^2
A_{min}	minimum area	142	mm^2
m	mass of set	≈ 57	g

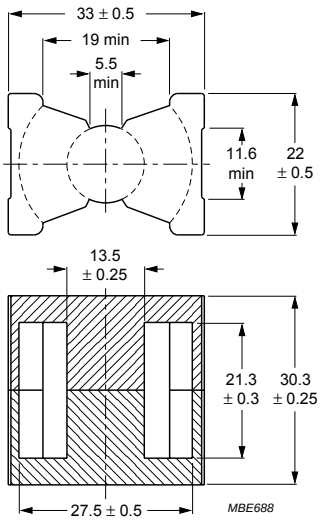

Dimensions in mm.

Fig.1 PQ32/30 core set.

Core sets for general purpose transformers and power applications

Clamping force for A_L measurements, 80 ±20 N.

GRADE	A_L (nH)	μ_e	TOTAL AIR GAP (μm)	TYPE NUMBER
3C81	315 ±3%	≈ 112	≈ 800	PQ32/30-3C81-E315
	400 ±3%	≈ 142	≈ 600	PQ32/30-3C81-A400
	630 ±3%	≈ 224	≈ 350	PQ32/30-3C81-A630
	1000 ±3%	≈ 356	≈ 200	PQ32/30-3C81-A1000
	1600 ±5%	≈ 570	≈ 110	PQ32/30-3C81-A1600
	6570 ±25%	≈ 2340	≈ 0	PQ32/30-3C81
3C90	315 ±3%	≈ 112	≈ 800	PQ32/30-3C90-E315
	400 ±3%	≈ 142	≈ 600	PQ32/30-3C90-A400
	630 ±3%	≈ 224	≈ 350	PQ32/30-3C90-A630
	1000 ±3%	≈ 356	≈ 200	PQ32/30-3C90-A1000
	1600 ±5%	≈ 570	≈ 110	PQ32/30-3C90-A1600
	5600 ±25%	≈ 1990	≈ 0	PQ32/30-3C90
3C91 des	6570 ±25%	≈ 2340	≈ 0	PQ32/30-3C91
3C94	5600 ±25%	≈ 1990	≈ 0	PQ32/30-3C94
3C95 des	6570 ±25%	≈ 2340	≈ 0	PQ32/30-3C95
3C96 des	5040 ±25%	≈ 1790	≈ 0	PQ32/30-3C96

GRADE	A_L (nH)	μ_e	TOTAL AIR GAP (μm)	TYPE NUMBER
3F3	315 ±3%	≈ 112	≈ 800	PQ32/30-3F3-E315
	400 ±3%	≈ 142	≈ 600	PQ32/30-3F3-A400
	630 ±3%	≈ 224	≈ 350	PQ32/30-3F3-A630
	1000 ±3%	≈ 356	≈ 200	PQ32/30-3F3-A1000
	1600 ±5%	≈ 570	≈ 110	PQ32/30-3F3-A1600
	4580 ±25%	≈ 1630	≈ 0	PQ32/30-3F3

Properties of core sets under power conditions

GRADE	B (mT) at	CORE LOSS (W) at					
	H = 250 A/m; f = 25 kHz; T = 100 °C	f = 25 kHz; $\hat{B}$ = 200 mT; T = 100 °C	f = 100 kHz; $\hat{B}$ = 100 mT; T = 100 °C	f = 100 kHz; $\hat{B}$ = 200 mT; T = 25 °C	f = 100 kHz; $\hat{B}$ = 200 mT; T = 100 °C	f = 400 kHz; $\hat{B}$ = 50 mT; T = 100 °C	f = 500 kHz; $\hat{B}$ = 50 mT; T = 100 °C
3C81	≥320	≤ 2.6	–	–	–	–	–
3C90	≥320	≤ 1.5	≤ 1.6	–	–	–	–
3C91	≥320	–	≤ 0.9(1)	–	≤ 6.0(1)	–	–
3C94	≥320	–	≤ 1.2	–	≤ 7.5	–	–
3C95	≥320	–	–	≤ 7.88	≤ 7.5	–	–
3C96	≥340	–	≤ 0.9	–	≤ 6.0	≤ 2.3	≤ 4.7
3F3	≥320	–	≤ 1.4	–	–	≤ 2.4	–

Note

1. Measured at 60 °C.

COIL FORMER

General data 12-pins PQ32/30 coil former

PARAMETER	SPECIFICATION
Coil former material	Polyethylene terephtalate (PET), glass-reinforced, flame retardant in accordance with *"UL 94V-0"*; UL file number E41938
Pin material	copper-tin alloy (CuSn), tin (Sn) plated
Maximum operating temperature	180 °C, *"IEC 60085",* class H
Resistance to soldering heat	*"IEC 60068-2-20"*, Part 2, Test Tb, method 1B, 350 °C, 3.5 s
Solderability	*"IEC 60068-2-20"*, Part 2, Test Ta, method 1

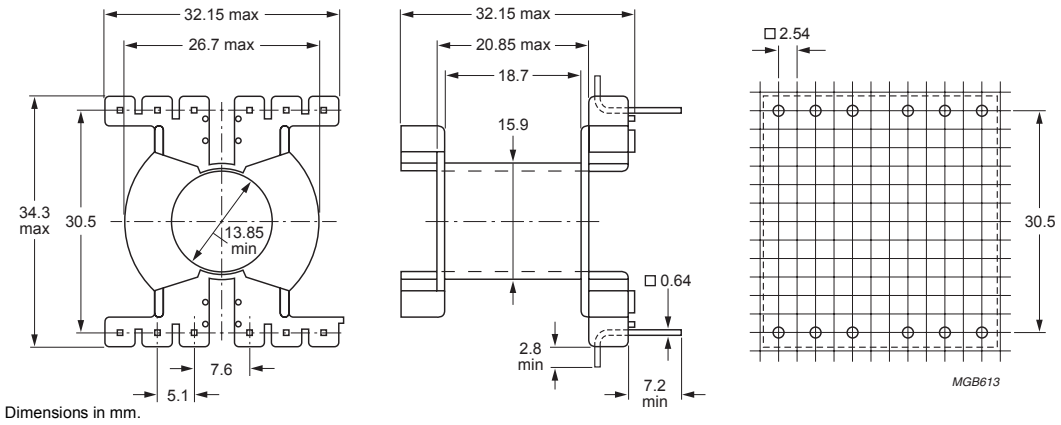

Fig.2 PQ32/30 coil former; 12-pins.

Winding data and area product for 12-pins PQ32/30 coil former

NUMBER OF SECTIONS	MINIMUM WINDING AREA (mm^2)	NOMINAL WINDING WIDTH (mm)	AVERAGE LENGTH OF TURN (mm)	AREA PRODUCT Ae x Aw (mm^4)	TYPE NUMBER
1	53.0	18.7	66.7	8850	CPV-PQ32/30-1S-12P-Z
1	53.0	18.7	66.7	8850	CPV-PQ32/30-1S-12PD-Z

MOUNTING PARTS

General data

ITEM	REMARKS	TYPE NUMBER
Clamp	phosphorbronze, Sn plated, earth pins solderability acc. to *"IEC 60068-2-20"*, Part 2, Test Ta, method 1: 235 °C, 2 s	CLM/P-PQ32/30

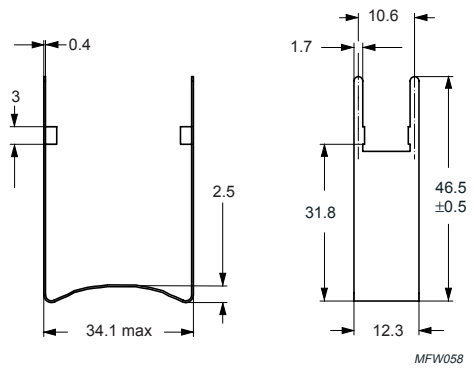

Dimensions in mm.

Fig.3 Clamp CLM/P-PQ32/30

CORE SETS

Effective core parameters

SYMBOL	PARAMETER	VALUE	UNIT
Σ(l/A)	core factor (C1)	0.454	mm^{-1}
V_e	effective volume	16300	mm^3
l_e	effective length	86.1	mm
A_e	effective area	190	mm^2
A_{min}	minimum area	162	mm^2
m	mass of set	≈ 73	g

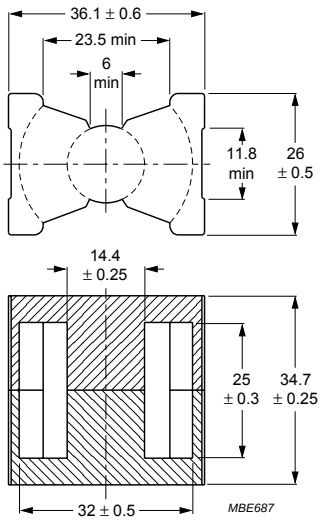

Dimensions in mm.

Fig.1 PQ35/35 core set.

Core sets for general purpose transformers and power applications

Clamping force for A_L measurements, 80 ± 20 N.

GRADE	A_L (nH)	μ_e	TOTAL AIR GAP (μm)	TYPE NUMBER
3C81	315 ±3%	≈ 114	≈ 920	PQ35/35-3C81-E315
	400 ±3%	≈ 144	≈ 690	PQ35/35-3C81-E400
	630 ±3%	≈ 227	≈ 400	PQ35/35-3C81-A630
	1000 ±3%	≈ 361	≈ 230	PQ35/35-3C81-A1000
	1600 ±5%	≈ 577	≈ 120	PQ35/35-3C81-A1600
	6000 ±25%	≈ 2160	≈ 0	PQ35/35-3C81
3C90	315 ±3%	≈ 114	≈ 920	PQ35/35-3C90-E315
	400 ±3%	≈ 144	≈ 690	PQ35/35-3C90-E400
	630 ±3%	≈ 227	≈ 400	PQ35/35-3C90-A630
	1000 ±3%	≈ 361	≈ 230	PQ35/35-3C90-A1000
	1600 ±5%	≈ 577	≈ 120	PQ35/35-3C90-A1600
	5200 ±25%	≈ 1880	≈ 0	PQ35/35-3C90
3C91 des	6000 ±25%	≈ 2160	≈ 0	PQ35/35-3C91
3C94	5200 ±25%	≈ 1880	≈ 0	PQ35/35-3C94
3C95 des	6000 ±25%	≈ 2160	≈ 0	PQ35/35-3C95
3C96 des	4700 ±25%	≈ 1700	≈ 0	PQ35/35-3C96

GRADE	A_L (nH)	μ_e	TOTAL AIR GAP (μm)	TYPE NUMBER
3F3	315 ±3%	≈ 114	≈ 920	PQ35/35-3F3-E315
	400 ±3%	≈ 144	≈ 690	PQ35/35-3F3-E400
	630 ±3%	≈ 227	≈ 400	PQ35/35-3F3-A630
	1000 ±3%	≈ 361	≈ 230	PQ35/35-3F3-A1000
	1600 ±5%	≈ 577	≈ 120	PQ35/35-3F3-A1600
	4570 ±25%	≈ 1650	≈ 0	PQ35/35-3F3

Properties of core sets under power conditions

GRADE	B (mT) at	CORE LOSS (W) at					
	H = 250 A/m; f = 25 kHz; T = 100 °C	f = 25 kHz; $\hat{B}$ = 200 mT; T = 100 °C	f = 100 kHz; $\hat{B}$ = 100 mT; T = 100 °C	f = 100 kHz; $\hat{B}$ = 200 mT; T = 25 °C	f = 100 kHz; $\hat{B}$ = 200 mT; T = 100 °C	f = 400 kHz; $\hat{B}$ = 50 mT; T = 100 °C	f = 500 kHz; $\hat{B}$ = 50 mT; T = 100 °C
3C81	≥320	≤ 3.8	–	–	–	–	–
3C90	≥320	≤ 2.0	≤ 2.1	–	–	–	–
3C91	≥320	–	≤ 1.2(1)	–	≤ 8.0(1)	–	–
3C94	≥320	–	≤ 1.6	–	≤ 10	–	–
3C95	≥320	–	–	≤ 10.3	≤ 9.78	–	–
3C96	≥340	–	≤ 1.2	–	≤ 8.0	≤ 3.0	≤ 6.1
3F3	≥320	–	≤ 1.8	–	–	≤ 3.1	–

Note

1. Measured at 60 °C.

COIL FORMER

General data 12-pins PQ35/35 coil former

PARAMETER	SPECIFICATION
Coil former material	Polyethylene terephtalate (PET), glass-reinforced, flame retardant in accordance with *"UL 94V-0"*; UL file number E41938
Pin material	copper-plated steel wire, tin (Sn) plated
Maximum operating temperature	180 °C, *"IEC 60085",* class H
Resistance to soldering heat	*"IEC 60068-2-20"*, Part 2, Test Tb, method 1B, 350 °C, 3.5 s
Solderability	*"IEC 60068-2-20"*, Part 2, Test Ta, method 1

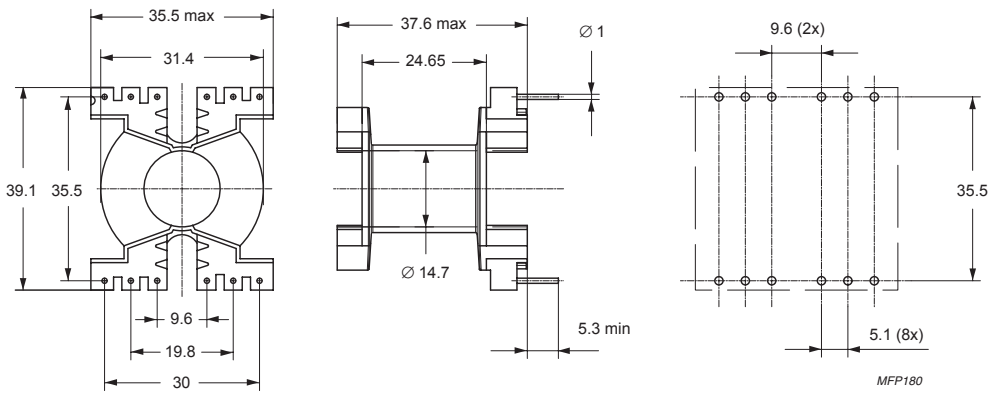

Dimensions in mm.

Fig.2 PQ35/35 coil former; 12-pins.

Winding data for 12-pins PQ35/35 coil former

NUMBER OF SECTIONS	MINIMUM WINDING AREA (mm^2)	NOMINAL WINDING WIDTH (mm)	AVERAGE LENGTH OF TURN (mm)	TYPE NUMBER
1	152	20.8	75	CPV-PQ35/35-1S-12P-Z

MOUNTING PARTS

General data

ITEM	REMARKS	TYPE NUMBER
Clamp	phosphorbronze, Sn plated, earth pins solderability acc. to *"IEC 60068-2-20"*, Part 2, Test Ta, method 1: 235 °C, 2 s	CLM/P-PQ35/35

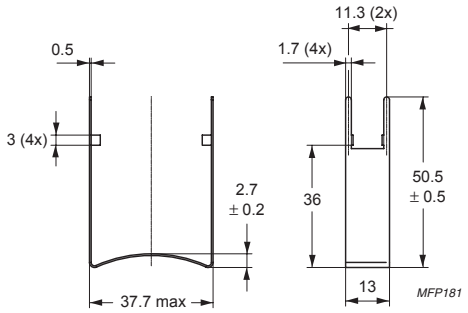

Dimensions in mm.

Fig.3 Clamp CLM/P-PQ35/35

CORE SETS

Effective core parameters

SYMBOL	PARAMETER	VALUE	UNIT
Σ(l/A)	core factor (C1)	0.507	mm^{-1}
V_e	effective volume	20500	mm^3
l_e	effective length	102	mm
A_e	effective area	201	mm^2
A_{min}	minimum area	175	mm^2
m	mass of set	≈ 97	g

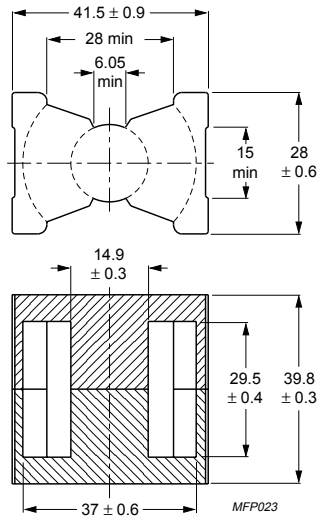

Dimensions in mm.

Fig.1 PQ40/40 core set.

Core sets for general purpose transformers and power applications

Clamping force for A_L measurements, 80 ± 20 N.

GRADE	A_L (nH)	μ_e	AIR GAP (μm)	TYPE NUMBER
3C91 des	6100 ± 25 %	≈ 2460	≈ 0	PQ40/40-3C91
3C94	4900 ± 25 %	≈ 1980	≈ 0	PQ40/40-3C94
3C95 des	6100 ± 25 %	≈ 2460	≈ 0	PQ40/40-3C95
3C96 des	4200 ± 25 %	≈ 1690	≈ 0	PQ40/40-3C96

Properties of core sets under power conditions

GRADE	B (mT) at	CORE LOSS (W) at			
	H = 250 A/m; f = 10 kHz; T = 100 °C	f = 100 kHz; $\hat{B}$ = 100 mT; T = 100 °C	f = 100 kHz; $\hat{B}$ = 200 mT; T = 25 °C	f = 100 kHz; $\hat{B}$ = 200 mT; T = 100 °C	f = 500 kHz; $\hat{B}$ = 50 mT; T = 100 °C
3C91	≥320	≤ 1.65[1]	–	≤ 10[1]	–
3C94	≥320	≤ 2.1	–	≤ 12.6	–
3C95	≥320	–	≤ 12.9	≤ 12.3	–
3C96	≥340	≤ 1.65	–	≤ 10	≤ 8.0

Note

1. Measured at 60 °C.

MOUNTING PARTS

General data

ITEM	REMARKS	TYPE NUMBER
Clamp	phosphorbronze, Sn plated, earth pins solderability acc. to *"IEC 60068-2-20"*, Part 2, Test Ta, method 1: 235 °C, 2 s	CLM/P-PQ40/40

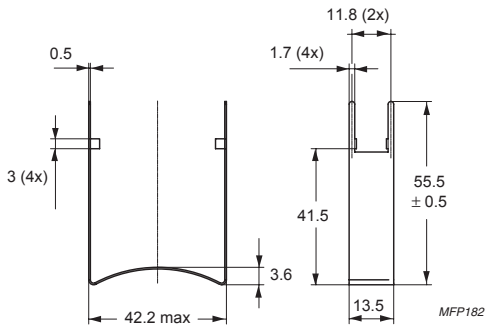

Dimensions in mm.

Fig.2 Clamp CLM/P-PQ40/40

CORE SETS

Effective core parameters

SYMBOL	PARAMETER	VALUE	UNIT
$\Sigma(l/A)$	core factor (C1)	0.345	mm^{-1}
V_e	effective volume	37100	mm^3
l_e	effective length	113	mm
A_e	effective area	328	mm^2
A_{min}	minimum area	314	mm^2
m	mass of set	≈ 195	g

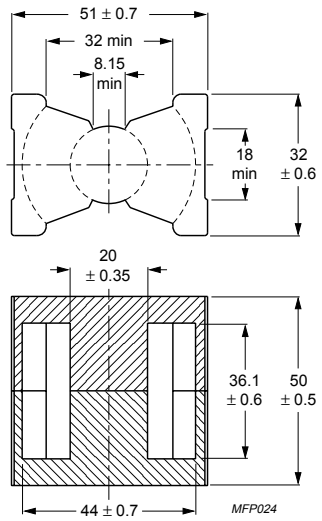

Dimensions in mm.

Fig.1 PQ50/50 core set.

Core sets for general purpose transformers and power applications

Clamping force for A_L measurements, 80 ± 20 N.

GRADE	A_L (nH)	μ_e	AIR GAP (μm)	TYPE NUMBER
3C91 des	9200 ± 25 %	≈ 2530	≈ 0	PQ50/50-3C91
3C94	7400 ± 25 %	≈ 2030	≈ 0	PQ50/50-3C94
3C95 des	9200 ± 25 %	≈ 2530	≈ 0	PQ50/50-3C95
3C96 des	6300 ± 25 %	≈ 1730	≈ 0	PQ50/50-3C96

Properties of core sets under power conditions

GRADE	B (mT) at	CORE LOSS (W) at			
	H = 250 A/m; f = 10 kHz; T = 100 °C	f = 100 kHz; $\hat{B}$ = 100 mT; T = 100 °C	f = 100 kHz; $\hat{B}$ = 200 mT; T = 25 °C	f = 100 kHz; $\hat{B}$ = 200 mT; T = 100 °C	f = 500 kHz; $\hat{B}$ = 50 mT; T = 100 °C
3C91	≥ 320	≤ 2.9(1)	–	≤ 18(1)	–
3C94	≥ 320	≤ 3.8	–	≤ 23	–
3C95	≥ 320	–	≤ 23.4	≤ 22.3	–
3C96	≥ 340	≤ 2.9	–	≤ 18	≤ 14

Note

1. Measured at 60 °C.

Soft Ferrites

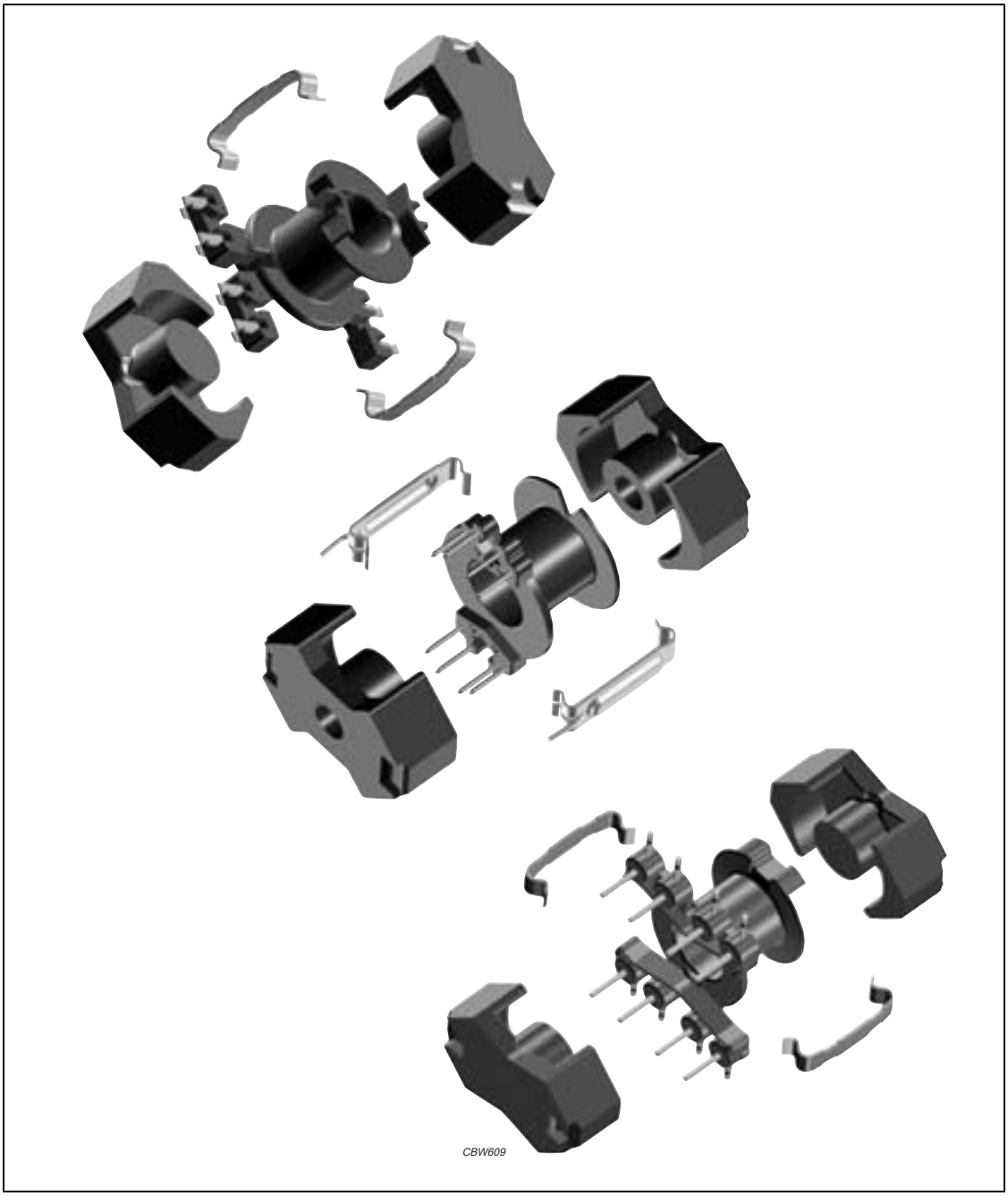
CBW609

PRODUCT OVERVIEW AND TYPE NUMBER STRUCTURE

Product overview RM cores

CORE TYPE	V_e (mm^3)	A_e (mm^2)	MASS (g)
RM4	230	11.0	1.5
RM4/I	322	13.8	1.7
RM4/ILP	251	14.5	1.3
RM5	450	21.2	3.1
RM5/I	574	24.8	3.2
RM5/ILP	430	24.5	2.6
RM6S	840	31.4	5.1
RM6S/I	1090	37.0	5.5
RM6S/ILP	820	37.5	4.4
RM6R	810	32.0	5.5
RM7/I	1325	44.1	7.5
RM7/ILP	1060	45.3	6.0
RM8	1850	52.0	11
RM8/I	2440	63.0	13
RM8/ILP	1860	64.9	10
RM10/I	4310	96.6	22
RM10/ILP	3360	99.1	17
RM12/I	8340	146	46
RM12/ILP	6195	148	35
RM14/I	13900	198	69
RM14/ILP	10230	201	55

- In accordance with IEC 62317, part 4.

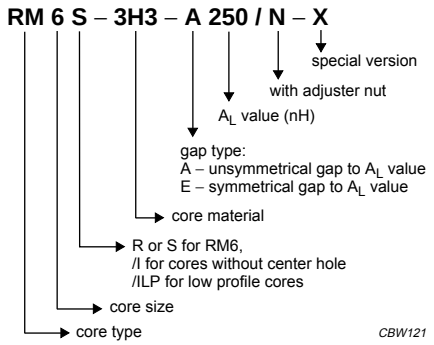

Fig.1 Type number structure for cores.

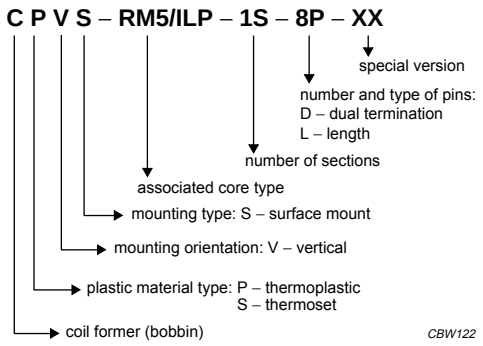

Fig.2 Type number structure for coil formers.

CORE SETS

Effective core parameters

SYMBOL	PARAMETER	VALUE	UNIT
Σ(l/A)	core factor (C1)	1.94	mm^{-1}
V_e	effective volume	230	mm^3
l_e	effective length	21.3	mm
A_e	effective area	11.0	mm^2
A_{min}	minimum area	8.1	mm^2
m	mass of set	≈ 1.5	g

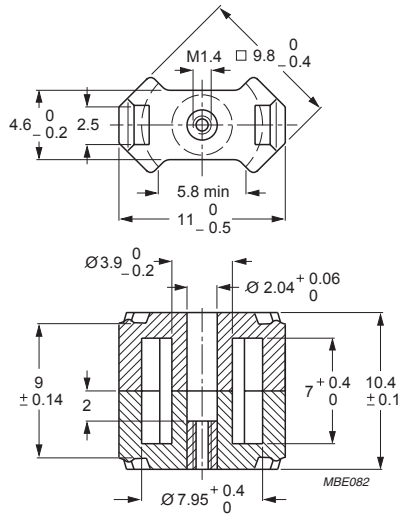

Dimensions in mm.

Fig.1 RM4 core set.

Core sets for filter applications

Clamping force for A_L measurements, 20 ±10 N.

GRADE	A_L (nH)	μ_e	TOTAL AIR GAP (μm)	TYPE NUMBER (WITH NUT)	TYPE NUMBER (WITHOUT NUT)
3D3 sup	40 ±3%	≈ 62	≈ 470	RM4-3D3-E40/N	RM4-3D3-E40
	63 ±3%	≈ 97	≈ 250	RM4-3D3-A63/N	RM4-3D3-A63
	400 ±25%	≈ 616	≈ 0	–	RM4-3D3
3H3 sup	63 ±3%	≈ 97	≈ 280	RM4-3H3-A63/N	RM4-3H3-A63
	100 ±3%	≈ 154	≈ 160	RM4-3H3-A100/N	RM4-3H3-A100
	160 ±3%	≈ 247	≈ 85	RM4-3H3-A160/N	RM4-3H3-A160
	900 ±25%	≈ 1390	≈ 0	–	RM4-3H3

INDUCTANCE ADJUSTERS

General data

PARAMETER	SPECIFICATION
Material of head and thread	polypropylene (PP), glass fibre reinforced
Maximum operating temperature	125 °C

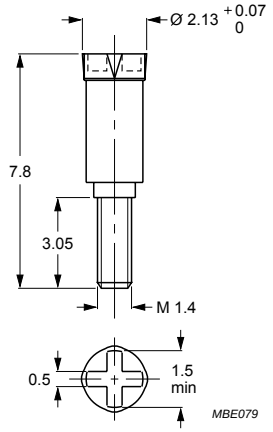

Dimensions in mm.

Fig.2 RM4 inductance adjuster.

Inductance adjuster selection chart sup (applies to all types)

GRADE	A_L (nH)	TYPES FOR LOW ADJUSTMENT	ΔL/L %(1)	TYPES FOR MEDIUM ADJUSTMENT	ΔL/L %(1)	TYPES FOR HIGH ADJUSTMENT	ΔL/L %(1)
3H3; 3D3	63	–	–	–	–	ADJ-RM4/RM5-RED	27
	100	–	–	ADJ-RM4/RM5-RED	17	ADJ-RM4/RM5-BROWN	25
	160	ADJ-RM4/RM5-GREEN	5	ADJ-RM4/RM5-BROWN	14	ADJ-RM4/RM5-GREY	26
	250	ADJ-RM4/RM5-RED	5	ADJ-RM4/RM5-GREY	12	ADJ-RM4/RM5-BLACK	17

Note

1. Maximum adjustment range.

COIL FORMER

General data

PARAMETER	SPECIFICATION
Coil former material	polyester (UP), glass-reinforced, flame retardant in accordance with *"UL 94V-0"*; UL file number E61040(M)
Pin material	copper-tin alloy (CuSn), tin (Sn) plated
Maximum operating temperature	180 °C, *"IEC 60085"*, class H
Resistance to soldering heat	*"IEC 60068-2-20"*, Part 2, Test Tb, method 1B, 350 °C, 3.5 s
Solderability	*"IEC 60068-2-20"*, Part 2, Test Ta, method 1

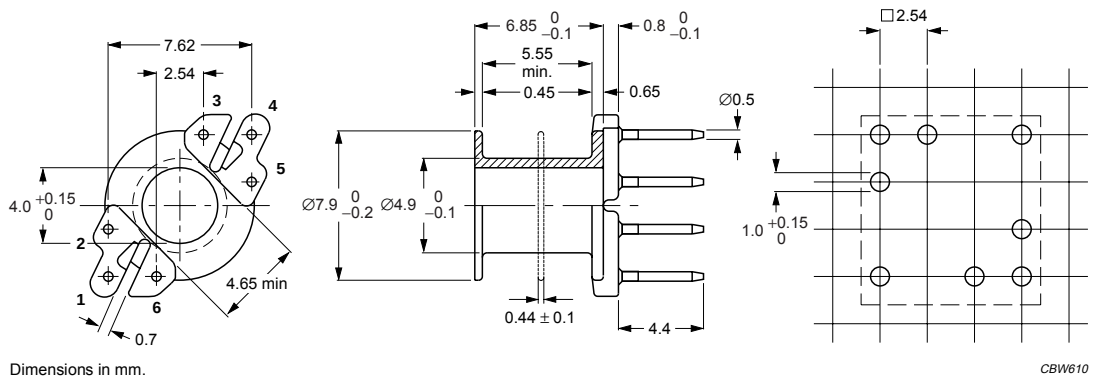

Fig.2 RM4 coil former.

Winding data and area product for RM4 coil former

NUMBER OF SECTIONS	NUMBER OF PINS	PIN POSITIONS USED	AVERAGE LENGTH OF TURN (mm)	WINDING AREA (mm^2)	WINDING WIDTH (mm)	AREA PRODUCT Ae x Aw (mm^4)	TYPE NUMBER
1	6	all	20	7.4	5.55	81.4	CSV-RM4-1S-6P(1)
1	5	1, 2, 3, 5, 6	20	7.4	5.55	81.4	CSV-RM4-1S-5P(1)
2	5	1, 2, 3, 5, 6	20	7	2 x 2.55	77.0	CSV-RM4-2S-5P

Note

1. Also available with post-inserted pins.

MOUNTING PARTS

General data

ITEM	SPECIFICATION
Clamping force	≈10 N
Clip material	steel
Clip plating	silver (Ag)
Solderability	*"IEC 60068-2-20",* Part 2, Test Ta, method 1
Type number	CLI/P-RM4/5

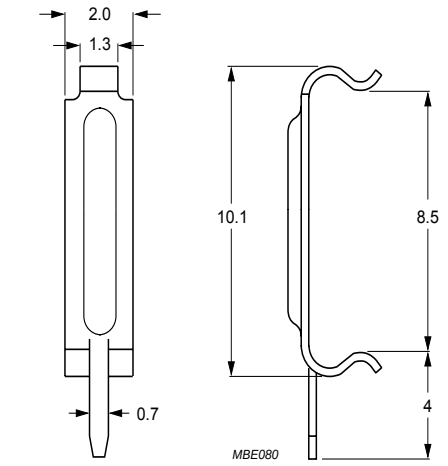

Dimensions in mm.

Fig.3 Mounting clip for RM4.

CORE SETS

Effective core parameters

SYMBOL	PARAMETER	VALUE	UNIT
Σ(l/A)	core factor (C1)	1.69	mm^{-1}
V_e	effective volume	322	mm^3
l_e	effective length	23.3	mm
A_e	effective area	13.8	mm^2
A_{min}	minimum area	11.5	mm^2
m	mass of set	≈ 1.7	g

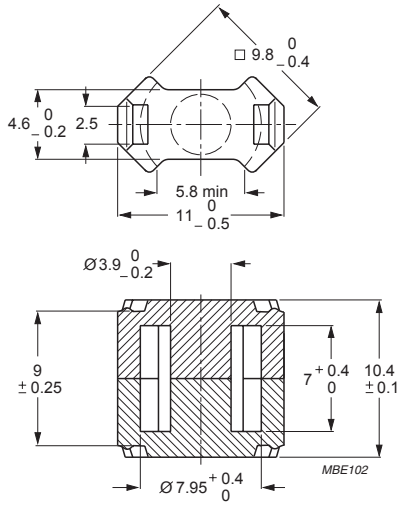

Dimensions in mm.

Fig.1 RM4/I core set.

Core sets for general purpose transformers and power applications

Clamping force for A_L measurements, 10 ±5 N.

GRADE	A_L (nH)	μ_e	AIR GAP (μm)	TYPE NUMBER
3C90	1125 ±25%	≈ 1510	≈ 0	RM4/I-3C90
3C94	1125 ±25%	≈ 1510	≈ 0	RM4/I-3C94
3C95 des	1320 ±25%	≈ 1785	≈ 0	RM4/I-3C95
3C96 des	1000 ±25%	≈ 1340	≈ 0	RM4/I-3C96
3F3	100 ±3%	≈ 134	≈ 200	RM4/I-3F3-A100
	160 ±3%	≈ 215	≈ 110	RM4/I-3F3-A160
	250 ±10%	≈ 336	≈ 60	RM4/I-3F3-A250
	950 ±25%	≈ 1280	≈ 0	RM4/I-3F3
3F35 prot	800 ±25%	≈ 1080	≈ 0	RM4/I-3F35
3F4 des	100 ±3%	≈ 134	≈ 180	RM4/I-3F4-A100
	160 ±3%	≈ 215	≈ 95	RM4/I-3F4-A160
	250 ±10%	≈ 336	≈ 45	RM4/I-3F4-A250
	560 ±25%	≈ 750	≈ 0	RM4/I-3F4
3F45 prot	560 ±25%	≈ 750	≈ 0	RM4/I-3F45

Core sets for filter applications

Clamping force for A_L measurements, 10 ±5 N.

GRADE	A_L (nH)	μ_e	AIR GAP (μm)	TYPE NUMBER
3B46 des	1550 ± 25 %	≈ 2085	≈ 0	RM4/I-3B46

Core sets of high permeability grades

Clamping force for A_L measurements, 10 ±5 N.

GRADE	A_L (nH)	μ_e	AIR GAP (μm)	TYPE NUMBER
3E5	3500 +40/–30%	≈ 4700	≈ 0	RM4/I-3E5

Properties of core sets under power conditions

GRADE	B (mT) at	CORE LOSS (W) at				
	H = 250 A/m; f = 25 kHz; T = 100 °C	f = 25 kHz; $\hat{B}$ = 200 mT; T = 100 °C	f = 100 kHz; $\hat{B}$ = 100 mT; T = 100 °C	f = 100 kHz; $\hat{B}$ = 200 mT; T = 25 °C	f = 100 kHz; $\hat{B}$ = 200 mT; T = 100 °C	f = 400 kHz; $\hat{B}$ = 50 mT; T = 100 °C
3C90	≥320	≤ 0.04	≤ 0.04	–	–	–
3C94	≥320	–	≤ 0.03	–	≤ 0.2	–
3C95	≥320	–	–	≤ 0.18	≤ 0.17	–
3C96	≥340	–	≤ 0.025	–	≤ 0.15	≤ 0.07
3F3	≥300	–	≤ 0.05	–	–	≤ 0.07
3F35	≥300	–	–	–	–	≤ 0.04
3F4	≥250	–	–	–	–	–

Properties of core sets under power conditions (continued)

GRADE	B (mT) at	CORE LOSS (W) at				
	H = 250 A/m; f = 25 kHz; T = 100 °C	f = 500 kHz; $\hat{B}$ = 50 mT; T = 100 °C	f = 500 kHz; $\hat{B}$ = 100 mT; T = 100 °C	f = 1 MHz; $\hat{B}$ = 30 mT; T = 100 °C	f = 1 MHz; $\hat{B}$ = 50 mT; T = 100 °C	f = 3 MHz; $\hat{B}$ = 10 mT; T = 100 °C
3C90	≥320	–	–	–	–	–
3C94	≥320	–	–	–	–	–
3C95	≥320	–	–	–	–	–
3C96	≥340	≤ 0.15	–	–	–	–
3F3	≥300	–	–	–	–	–
3F35	≥300	≤ 0.05	≤ 0.4	–	–	–
3F4	≥250	–	–	≤ 0.09	–	≤ 0.15
3F45	≥250	–	–	≤ 0.074	≤ 0.28	≤ 0.13

COIL FORMERS

Coil formers are equal to those of *"RM4", but "area product" is different.*

Winding data and area product (for RM4/I) for RM4 coil former

NUMBER OF SECTIONS	NUMBER OF PINS	PIN POSITIONS USED	AVERAGE LENGTH OF TURN (mm)	WINDING AREA (mm^2)	WINDING WIDTH (mm)	AREA PRODUCT Ae x Aw (mm^4)	TYPE NUMBER
1	6	all	20	7.4	5.55	102	CSV-RM4-1S-6P()
1	5	1, 2, 3, 5, 6	20	7.4	5.55	102	CSV-RM4-1S-5P()
2	5	1, 2, 3, 5, 6	20	7	2 x 2.55	96.6	CSV-RM4-2S-5P

Note : Also available with post-inserted pins.

MOUNTING PARTS

General data mounting clip with earth pin

ITEM	SPECIFICATION
Clamping force	≈ 5 N
Clip material	stainless steel (CrNi)
Clip plating	tin (Sn)
Solderability	*"IEC 60068-2-20"*, Part 2, Test Ta, method 1
Type number	CLI/P-RM4/5/I

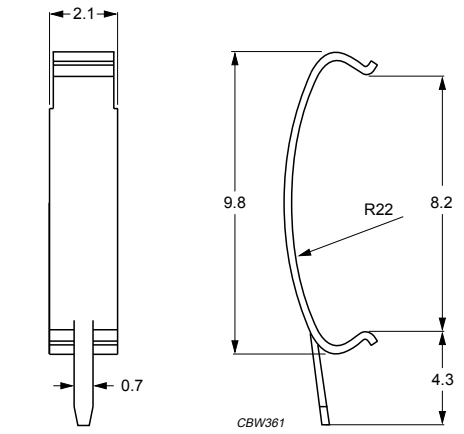

Dimensions in mm.

Fig.2 Mounting clip with earth pin for RM4/I.

General data mounting clip without earth pin

ITEM	SPECIFICATION
Clamping force	≈ 5 N
Clip material	stainless steel (CrNi)
Type number	CLI-RM4/5/I

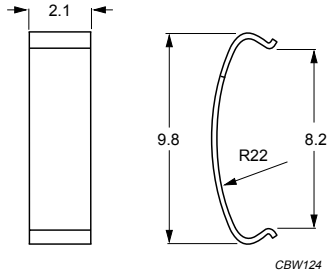

Dimensions in mm.

Fig.3 Mounting clip without earth pin for RM4/I.

CORE SETS

Effective core parameters

SYMBOL	PARAMETER	VALUE	UNIT
Σ(l/A)	core factor (C1)	1.19	mm^{-1}
V_e	effective volume	251	mm^3
l_e	effective length	17.3	mm
A_e	effective area	14.5	mm^2
A_{min}	minimum area	11.3	mm^2
m	mass of set	≈ 1.3	g

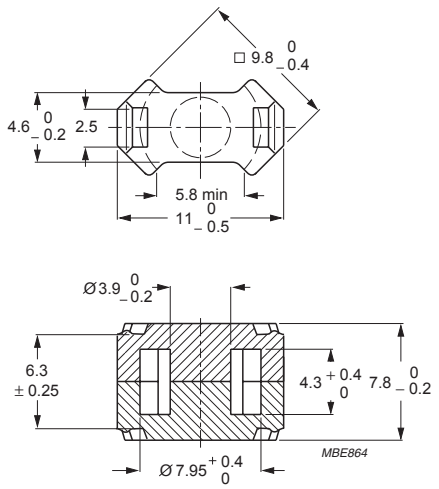

Dimensions in mm.

Fig.1 RM4/ILP core set.

Core sets for general purpose transformers and power applications

Clamping force for A_L measurements, 10 ±5 N.

GRADE	A_L (nH)	μ_e	AIR GAP (μm)	TYPE NUMBER
3C90	1400 ±25%	≈ 1330	≈ 0	RM4/ILP-3C90
3C94	1400 ±25%	≈ 1330	≈ 0	RM4/ILP-3C94
3C95 des	1610 ±25%	≈ 1535	≈ 0	RM4/ILP-3C95
3C96 des	1250 ±25%	≈ 1190	≈ 0	RM4/ILP-3C96
3F3	1200 ±25%	≈ 1140	≈ 0	RM4/ILP-3F3
3F35 prot	1000 ±25%	≈ 950	≈ 0	RM4/ILP-3F35
3F4 des	750 ±25%	≈ 710	≈ 0	RM4/ILP-3F4
3F45 prot	750 ±25%	≈ 710	≈ 0	RM4/ILP-3F45

Core sets for filter applications

Clamping force for A_L measurements, 10 ±5 N.

GRADE	A_L (nH)	μ_e	AIR GAP (μm)	TYPE NUMBER
3B46 des	1900 ± 25 %	≈ 1800	≈ 0	RM4/ILP-3B46

Core sets of high permeability grades

Clamping force for A_L measurements, 10 ±5 N.

GRADE	A_L (nH)	μ_e	AIR GAP (μm)	TYPE NUMBER
3E5	5000 +40/–30%	≈ 4750	≈ 0	RM4/ILP-3E5
3E6	6000 +40/–30%	≈ 5700	≈ 0	RM4/ILP-3E6

Properties of core sets under power conditions

GRADE	B (mT) at	CORE LOSS (W) at				
	H = 250 A/m; f = 25 kHz; T = 100 °C	f = 25 kHz; $\hat{B}$ = 200 mT; T = 100 °C	f = 100 kHz; $\hat{B}$ = 100 mT; T = 100 °C	f = 100 kHz; $\hat{B}$ = 200 mT; T = 25 °C	f = 100 kHz; $\hat{B}$ = 200 mT; T = 100 °C	f = 400 kHz; $\hat{B}$ = 50 mT; T = 100 °C
3C90	≥320	≤ 0.04	≤ 0.04	–	–	–
3C94	≥320	–	≤ 0.024	–	≤ 0.13	–
3C95	≥320	–	–	≤ 0.14	≤ 0.13	–
3C96	≥340	–	≤ 0.018	–	≤ 0.1	≤ 0.06
3F3	≥300	–	≤ 0.04	–	–	≤ 0.06
3F35	≥300	–	–	–	–	≤ 0.03
3F4	≥250	–	–	–	–	–

Properties of core sets under power conditions (continued)

GRADE	B (mT) at	CORE LOSS (W) at				
	H = 250 A/m; f = 25 kHz; T = 100 °C	f = 500 kHz; $\hat{B}$ = 50 mT; T = 100 °C	f = 500 kHz; $\hat{B}$ = 100 mT; T = 100 °C	f = 1 MHz; $\hat{B}$ = 30 mT; T = 100 °C	f = 1 MHz; $\hat{B}$ = 50 mT; T = 100 °C	f = 3 MHz; $\hat{B}$ = 10 mT; T = 100 °C
3C90	≥320	–	–	–	–	–
3C94	≥320	–	–	–	–	–
3C95	≥320	–	–	–	–	–
3C96	≥340	≤ 0.1	–	–	–	–
3F3	≥300	–	–	–	–	–
3F35	≥300	≤ 0.04	≤ 0.3	–	–	–
3F4	≥250	–	–	≤ 0.08	–	≤ 0.12
3F45	≥250	–	–	≤ 0.058	≤ 0.22	≤ 0.1

COIL FORMERS

General data SMD coil former

PARAMETER	SPECIFICATION
Coil former material	phenolformaldehyde (PF), glass-reinforced, flame retardant in accordance with *"UL 94V-0"*; UL file number E41429 (M)
Solder pad material	copper-clad steel, tin (Sn) plated
Maximum operating temperature	155 °C, *"IEC 60085"*, class F
Resistance to soldering heat	*"IEC 60068-2-20"*, Part 2, Test Tb, method 1B, 350 °C, 3.5 s
Solderability	*"IEC 60068-2-20"*, Part 2, Test Ta, method 1

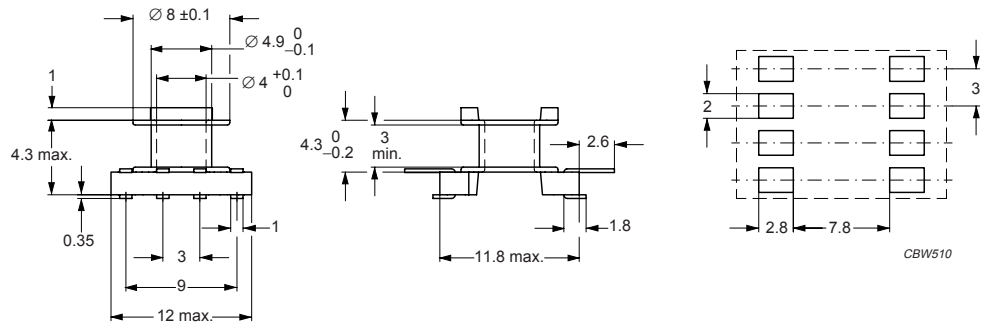

Dimensions in mm.

Fig.2 SMD coil former for RM4/ILP.

Winding data and area product for RM4/ILP coil former (SMD)

NUMBER OF SECTIONS	NUMBER OF SOLDER PADS	WINDING AREA (mm^2)	WINDING WIDTH (mm)	AVERAGE LENGTH OF TURN (mm)	AREA PRODUCT Ae x Aw (mm^4)	TYPE NUMBER
1	8	3.75	3.0	20.7	54.4	CSVS-RM4/LP-1S-8PL

MOUNTING PARTS

General data

ITEM	SPECIFICATION
Clamping force	≈5 N
Clip material	stainless steel (CrNi)
Type number	CLI-RM4/5/ILP

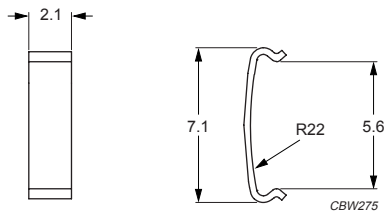

Dimensions in mm.

Fig.3 Mounting clip for RM4/ILP.

CORE SETS

Effective core parameters

SYMBOL	PARAMETER	VALUE	UNIT
Σ(l/A)	core factor (C1)	1.01	mm^{-1}
V_e	effective volume	450	mm^3
l_e	effective length	21.4	mm
A_e	effective area	21.2	mm^2
A_{min}	minimum area	14.8	mm^2
m	mass of set	≈ 3.1	g

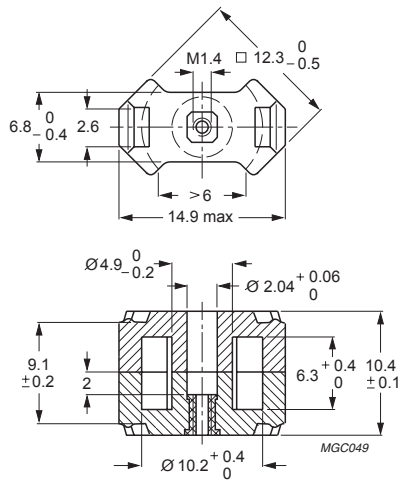

Dimensions in mm.

Fig.1 RM5 core set.

Core sets for filter applications

Clamping force for A_L measurements, 25 ±10 N.

GRADE	A_L (nH)	μ_e	TOTAL AIR GAP (μm)	TYPE NUMBER (WITH NUT)	TYPE NUMBER (WITHOUT NUT)
3D3 sup	40 ±3%	≈32	≈990	RM5-3D3-E40/N	RM5-3D3-E40
	63 ±3%	≈51	≈540	RM5-3D3-E63/N	RM5-3D3-E63
	100 ±3%	≈80	≈300	RM5-3D3-E100/N	RM5-3D3-E100
	800 ±25%	≈640	≈0	–	RM5-3D3
3H3 sup	160 ±3%	≈129	≈180	RM5-3H3-A160/N	RM5-3H3-A160
	250 ±3%	≈201	≈110	RM5-3H3-A250/N	RM5-3H3-A250
	315 ±3%	≈253	≈80	RM5-3H3-A315/N	RM5-3H3-A315
	400 ±5%	≈321	≈60	RM5-3H3-A400/N	RM5-3H3-A400
	1650 ±25%	≈1310	≈0	–	RM5-3H3

INDUCTANCE ADJUSTERS

General data

PARAMETER	SPECIFICATION
Material of head and thread	polypropylene (PP), glass fibre reinforced
Maximum operating temperature	125 °C

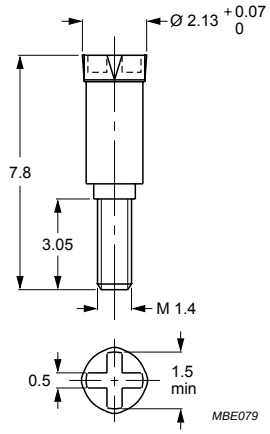

Dimensions in mm.

Fig.2 RM5 inductance adjuster.

Inductance adjuster selection chart sup (applies to all types)

GRADE	A_L (nH)	TYPES FOR LOW ADJUSTMENT	ΔL/L %(1)	TYPES FOR MEDIUM ADJUSTMENT	ΔL/L %(1)	TYPES FOR HIGH ADJUSTMENT	ΔL/L %(1)
3H3	63	–	–	–	–	ADJ-RM4/RM5-RED	23
	100	–	–	ADJ-RM4/RM5-RED	15	ADJ-RM4/RM5-BROWN	24
	160	ADJ-RM4/RM5-RED	11	ADJ-RM4/RM5-BROWN	15	ADJ-RM4/RM5-GREY	28
	250	ADJ-RM4/RM5-RED	6	ADJ-RM4/RM5-BROWN	10	ADJ-RM4/RM5-GREY	17
	315	ADJ-RM4/RM5-BROWN	7	ADJ-RM4/RM5-GREY	13	–	–
	400	ADJ-RM4/RM5-BROWN	5	ADJ-RM4/RM5-BLACK	14	–	–
3D3	40	–	–	ADJ-RM4/RM5-GREEN	15	ADJ-RM4/RM5-RED	30
	63	–	–	–	–	ADJ-RM4/RM5-RED	20
	100	–	–	ADJ-RM4/RM5-RED	14	–	–

Note

1. Maximum adjustment range.

COIL FORMER

General data

PARAMETER	SPECIFICATION
Coil former material	phenolformaldehyde (PF), glass-reinforced, flame retardant in accordance with *"UL 94V-0"*; UL file number E167521(M)
Pin material	copper-tin alloy (CuSn), tin (Sn) plated
Maximum operating temperature	180 °C, *"IEC 60085"* , class H
Resistance to soldering heat	*"IEC 60068-2-20"*, Part 2, Test Tb, method 1B, 350 °C, 3.5 s
Solderability	*"IEC 60068-2-20"*, Part 2, Test Ta, method 1

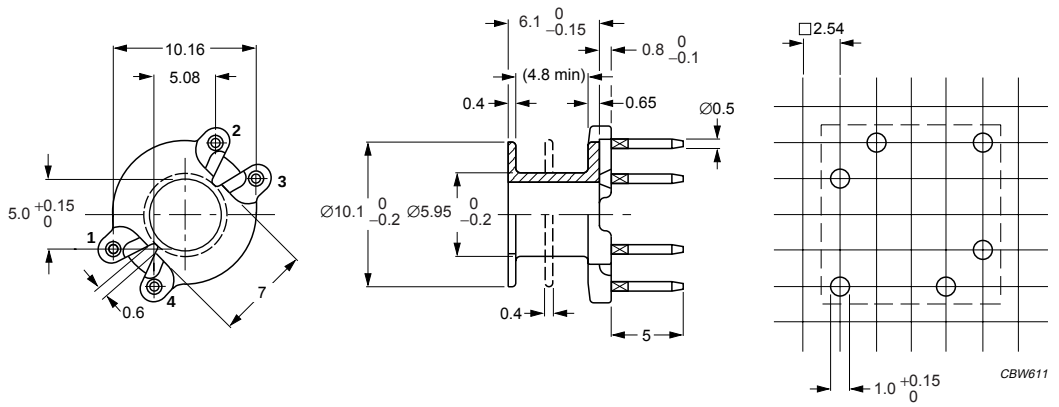

Dimensions in mm.

Fig.3 RM5 coil former; 4-pins.

Winding data and area product for 4-pins RM5 coil former

NUMBER OF SECTIONS	NUMBER OF PINS	PIN POSITIONS USED	WINDING AREA (mm^2)	WINDING WIDTH (mm)	AVERAGE LENGTH OF TURN (mm)	AREA PRODUCT Ae x Aw (mm^4)	TYPE NUMBER
1	4	all	9.5	4.8	25	201	CSV-RM5-1S-4P
2	4	all	2×4.35	2×2.2	25	2 x 92.2	CSV-RM5-2S-4P

General data coil former

PARAMETER	SPECIFICATION
Coil former material	unsaturated polyester (UP), glass-reinforced, flame retardant in accordance with *"UL 94V-0"*; UL file number E61040 (M)
Solder pad material	copper-tin alloy CuSn), tin (Sn) plated
Maximum operating temperature	180 °C, *"IEC 60085",* class H
Resistance to soldering heat	*"IEC 60068-2-20"*, Part 2, Test Tb, method 1B, 350 °C, 3.5 s
Solderability	*"IEC 60068-2-20"*, Part 2, Test Ta, method 1

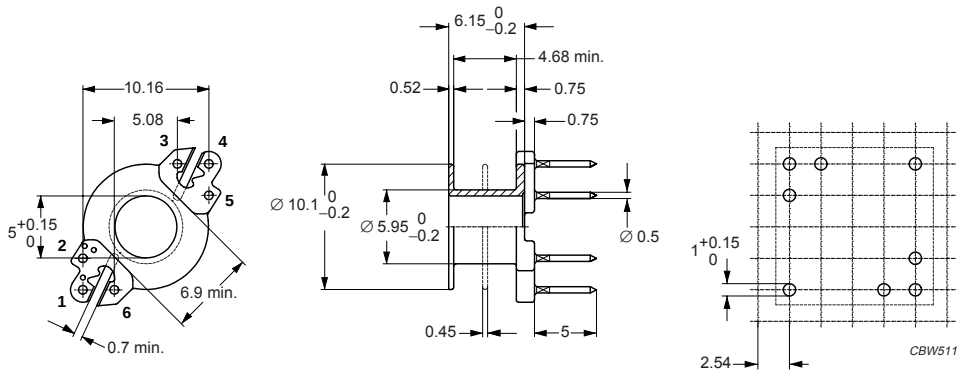

Dimensions in mm.

Fig.4 Coil former for RM5; 6-pins

Winding data and area product for 6-pins RM5 coil former

NUMBER OF SECTIONS	NUMBER OF PINS	PIN POSITIONS USED	WINDING AREA (mm^2)	WINDING WIDTH (mm)	AVERAGE LENGTH OF TURN (mm)	AREA PRODUCT Ae x Aw (mm^4)	TYPE NUMBER
1	6	all	9.2	4.68	24.9	195	CSV-RM5-1S-6P-G(1)
1	5	1, 2, 3, 5, 6	9.2	4.68	24.9	195	CSV-RM5-1S-5P-G(1)
1	4	2, 3, 5, 6	9.2	4.68	24.9	195	CSV-RM5-1S-4P-G(1)
2	6	all	2 × 4.15	2 × 2.06	24.9	2 x 88.0	CSV-RM5-2S-6P-G(1)
2	5	1, 2, 3, 5, 6	2 × 4.15	2 × 2.06	24.9	2 x 88.0	CSV-RM5-2S-5P-G(1)

Note

1. Also available with post-inserted pins.

MOUNTING PARTS

General data

ITEM	SPECIFICATION
Clamping force	≈12 N
Clip material	steel
Clip plating	silver (Ag)
Solderability	*"IEC 60068-2-20"*, Part 2, Test Ta, method 1
Type number	CLI/P-RM4/5

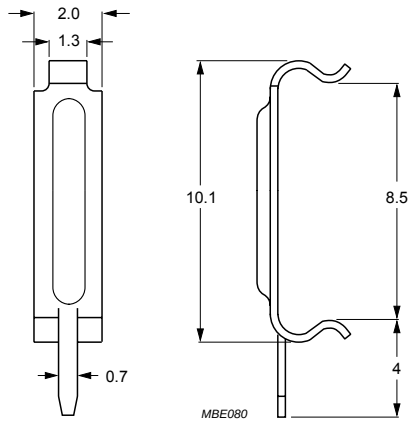

Dimensions in mm.

Fig.5 Mounting clip for RM5.

CORE SETS

Effective core parameters

SYMBOL	PARAMETER	VALUE	UNIT
Σ(l/A)	core factor (C1)	0.935	mm^{-1}
V_e	effective volume	574	mm^3
l_e	effective length	23.2	mm
A_e	effective area	24.8	mm^2
A_{min}	minimum area	18.1	mm^2
m	mass of set	≈ 3.2	g

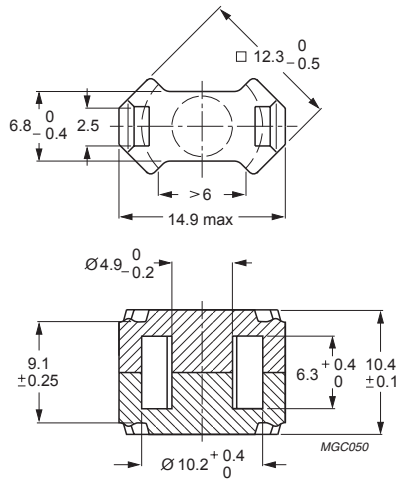

Dimensions in mm.

Fig.1 RM5/I core set.

Core sets for general purpose

Clamping force for A_L measurements, 12 ±5 N.

GRADE	A_L (nH)	μ_e	AIR GAP (μm)	TYPE NUMBER
3C90	63 ±3%	≈ 47	≈ 680	RM5/I-3C90-A63
	100 ±3%	≈ 74	≈ 380	RM5/I-3C90-A100
	160 ±3%	≈ 119	≈ 220	RM5/I-3C90-A160
	250 ±3%	≈ 186	≈ 130	RM5/I-3C90-A250
	315 ±5%	≈ 234	≈ 100	RM5/I-3C90-A315
	2000 ±25%	≈ 1490	≈ 0	RM5/I-3C90
3C94	63 ±3%	≈ 47	≈ 680	RM5/I-3C94-A63
	100 ±3%	≈ 74	≈ 380	RM5/I-3C94-A100
	160 ±3%	≈ 119	≈ 220	RM5/I-3C94-A160
	250 ±3%	≈ 186	≈ 130	RM5/I-3C94-A250
	315 ±5%	≈ 234	≈ 100	RM5/I-3C94-A315
	2000 ±25%	≈ 1490	≈ 0	RM5/I-3C94
3C95 des	2350 ±25%	≈ 1750	≈ 0	RM5/I-3C95
3C96 des	1800 ±25%	≈ 1340	≈ 0	RM5/I-3C96
3F3	63 ±3%	≈ 47	≈ 680	RM5/I-3F3-A63
	100 ±3%	≈ 74	≈ 380	RM5/I-3F3-A100
	160 ±3%	≈ 119	≈ 220	RM5/I-3F3-A160
	250 ±3%	≈ 186	≈ 130	RM5/I-3F3-A250
	315 ±5%	≈ 234	≈ 100	RM5/I-3F3-A315
	1700 ±25%	≈ 1270	≈ 0	RM5/I-3F3

GRADE	A_L (nH)	μ_e	AIR GAP (μm)	TYPE NUMBER
3F35 prot	1300 ±25%	≈ 970	≈ 0	RM5/I-3F35
3F4 des	100 ±3%	≈ 74	≈ 360	RM5/I-3F4-A100
	160 ±3%	≈ 119	≈ 200	RM5/I-3F4-A160
	250 ±3%	≈ 186	≈ 110	RM5/I-3F4-A250
	900 ±25%	≈ 670	≈ 0	RM5/I-3F4
3F45 prot	900 ±25%	≈ 670	≈ 0	RM5/I-3F45

Core sets of filter and high permeability grades

Clamping force for A_L measurements, 12 ±5 N.

GRADE	A_L (nH)	μ_e	AIR GAP (μm)	TYPE NUMBER
3B46 des	2800 ± 25%	≈ 2080	≈ 0	RM5/I-3B46
3E27	4975 ± 25%	≈ 3700	≈ 0	RM5/I-3E27
3E5	6700 +40/–30%	≈ 4990	≈ 0	RM5/I-3E5
3E6	8500 +40/–30%	≈ 6330	≈ 0	RM5/I-3E6

Properties of core sets under power conditions

GRADE	B (mT) at	CORE LOSS (W) at				
	H = 250 A/m; f = 25 kHz; T = 100 °C	f = 25 kHz; $\hat{B}$ = 200 mT; T = 100 °C	f = 100 kHz; $\hat{B}$ = 100 mT; T = 100 °C	f = 100 kHz; $\hat{B}$ = 200 mT; T = 25 °C	f = 100 kHz; $\hat{B}$ = 200 mT; T = 100 °C	f = 400 kHz; $\hat{B}$ = 50 mT; T = 100 °C
3C90	≥320	≤ 0.07	≤ 0.08	–	–	–
3C94	≥320	–	≤ 0.06	–	≤ 0.32	–
3C95	≥320	–	–	≤ 0.32	≤ 0.3	–
3C96	≥340	–	≤ 0.04	–	≤ 0.24	≤ 0.11
3F3	≥315	–	≤ 0.08	–	–	≤0.11
3F35	≥300	–	–	–	–	≤ 0.06
3F4	≥250	–	–	–	–	–

Properties of core sets under power conditions (continued)

GRADE	B (mT) at	CORE LOSS (W) at				
	H = 250 A/m; f = 25 kHz; T = 100 °C	f = 500 kHz; $\hat{B}$ = 50 mT; T = 100 °C	f = 500 kHz; $\hat{B}$ = 100 mT; T = 100 °C	f = 1 MHz; $\hat{B}$ = 30 mT; T = 100 °C	f = 1 MHz; $\hat{B}$ = 50 mT; T = 100 °C	f = 3 MHz; $\hat{B}$ =10 mT; T = 100 °C
3C90	≥320	–	–	–	–	–
3C94	≥320	–	–	–	–	–
3C95	≥320	–	–	–	–	–
3C96	≥340	≤ 0.22	–	–	–	–
3F3	≥315	–	–	–	–	–
3F35	≥300	≤ 0.08	≤ 0.7	–	–	–
3F4	≥250	–	–	≤ 0.17	–	≤ 0.27
3F45	≥250	–	–	≤ 0.13	≤ 0.48	≤ 0.23

COIL FORMERS

General data SMD coil former

PARAMETER	SPECIFICATION
Coil former material	phenolformaldehyde (PF), glass-reinforced, flame retardant in accordance with *"UL 94V-0"*; UL file number E41429 (M)
Solder pad material	copper-clad steel, tin (Sn) plated
Maximum operating temperature	155 °C, *"IEC 60085"*, class F
Resistance to soldering heat	*"IEC 60068-2-20"*, Part 2, Test Tb, method 1B, 350 °C, 3.5 s
Solderability	*"IEC 60068-2-20"*, Part 2, Test Ta, method 1

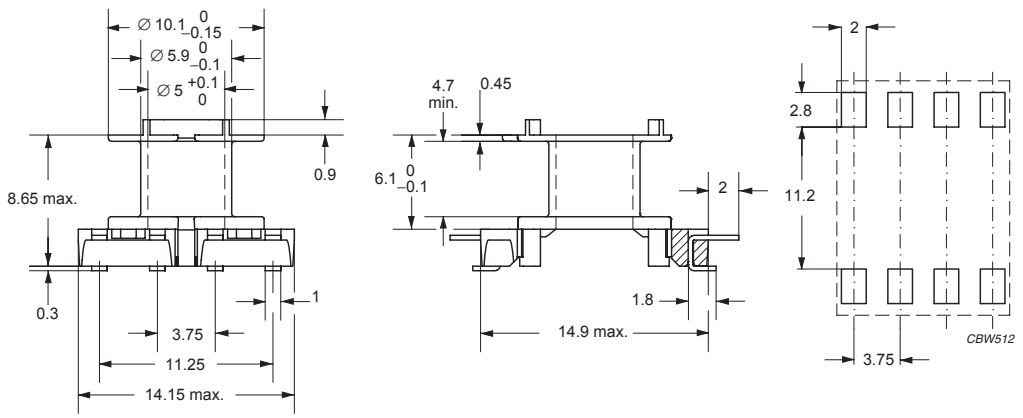

Dimensions in mm.

Fig.2 SMD coil former for RM5/I.

Winding data and area product for RM5/I coil former (SMD)

NUMBER OF SECTIONS	NUMBER OF SOLDER PADS	WINDING AREA (mm^2)	WINDING WIDTH (mm)	AVERAGE LENGTH OF TURN (mm)	AREA PRODUCT Ae x Aw (mm^4)	TYPE NUMBER
1	8	9.5	4.7	24.9	236	CSVS-RM5-1S-8P

Additional coil formers are those of *"RM5"*, but *"area product"* is different.

Winding data and area product (for RM5/I) for 4-pins RM5 coil former

NUMBER OF SECTIONS	NUMBER OF PINS	PIN POSITIONS USED	WINDING AREA (mm^2)	WINDING WIDTH (mm)	AVERAGE LENGTH OF TURN (mm)	AREA PRODUCT Ae x Aw (mm^4)	TYPE NUMBER
1	4	all	9.5	4.8	25	236	CSV-RM5-1S-4P
2	4	all	2×4.35	2×2.2	25	2 x 108	CSV-RM5-2S-4P

Winding data and area product (for RM5/I) for 6-pins RM5 coil former

NUMBER OF SECTIONS	NUMBER OF PINS	PIN POSITIONS USED	WINDING AREA (mm^2)	WINDING WIDTH (mm)	AVERAGE LENGTH OF TURN (mm)	AREA PRODUCT Ae x Aw (mm^4)	TYPE NUMBER
1	6	all	9.2	4.68	24.9	228	CSV-RM5-1S-6P-G()
1	5	1, 2, 3, 5, 6	9.2	4.68	24.9	228	CSV-RM5-1S-5P-G()
1	4	2, 3, 5, 6	9.2	4.68	24.9	228	CSV-RM5-1S-4P-G()
2	6	all	2×4.15	2×2.06	24.9	2 x 103	CSV-RM5-2S-6P-G()
2	5	1, 2, 3, 5, 6	2×4.15	2×2.06	24.9	2 x 103	CSV-RM5-2S-5P-G()

Note

Also available with post-inserted pins.

MOUNTING PARTS

General data mounting clip with earth pin

ITEM	SPECIFICATION
Clamping force	≈6 N
Clip material	stainless steel (CrNi)
Clip plating	tin (Sn)
Solderability	*"IEC 60068-2-20"*, Part 2, Test Ta, method 1
Type number	CLI/P-RM4/5/I

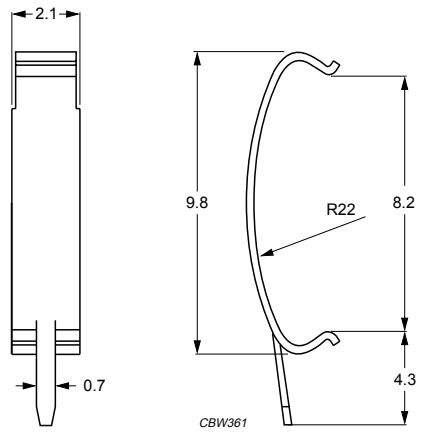

Dimensions in mm.

Fig.3 Mounting clip with earth pin for RM5/I.

General data mounting clip without earth pin

ITEM	SPECIFICATION
Clamping force	≈5 N
Clip material	stainless steel (CrNi)
Type number	CLI-RM4/5/I

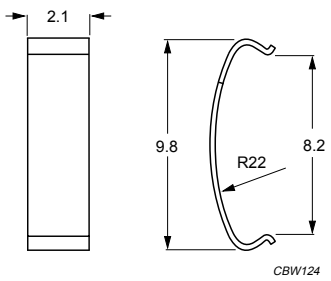

Dimensions in mm.

Fig.4 Mounting clip without earth pin for RM5/I.

CORE SETS

Effective core parameters

SYMBOL	PARAMETER	VALUE	UNIT
Σ(l/A)	core factor (C1)	0.710	mm^{-1}
V_e	effective volume	430	mm^3
l_e	effective length	17.5	mm
A_e	effective area	24.5	mm^2
A_{min}	minimum area	18.1	mm^2
m	mass of set	≈ 2.6	g

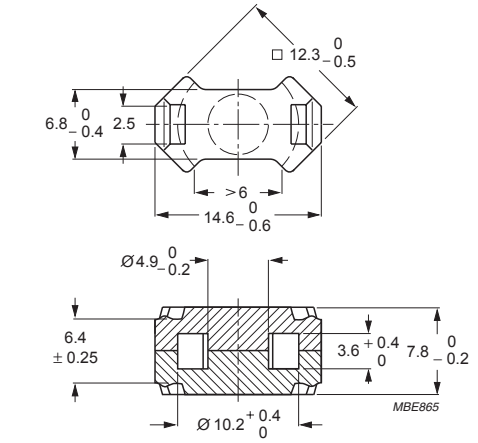

Dimensions in mm.

Fig.1 RM5/ILP core set.

Core sets for general purpose transformers and power applications

Clamping force for A_L measurements, 20 ±10 N.

GRADE	A_L (nH)	μ_e	AIR GAP (μm)	TYPE NUMBER
3C90	2350 ±25%	≈ 1340	≈ 0	RM5/ILP-3C90
3C94	2350 ±25%	≈ 1340	≈ 0	RM5/ILP-3C94
3C95 des	2710 ±25%	≈ 1545	≈ 0	RM5/ILP-3C95
3C96 des	2100 ±25%	≈ 1190	≈ 0	RM5/ILP-3C96
3F3	2000 ±25%	≈ 1140	≈ 0	RM5/ILP-3F3
3F35 prot	1700 ±25%	≈ 970	≈ 0	RM5/ILP-3F35
3F4 des	1250 ±25%	≈ 710	≈ 0	RM5/ILP-3F4
3F45 prot	1250 ±25%	≈ 710	≈ 0	RM5/ILP-3F45

Core sets for filter applications

Clamping force for A_L measurements, 20 ±10 N.

GRADE	A_L (nH)	μ_e	AIR GAP (μm)	TYPE NUMBER
3B46 des	3200 ± 25 %	≈ 1810	≈ 0	RM5/ILP-3B46

Core sets of high permeability grades

Clamping force for A_L measurements, 20 ±10 N.

GRADE	A_L (nH)	μ_e	AIR GAP (μm)	TYPE NUMBER
3E5	8500 +40/–30%	≈ 4830	≈ 0	RM5/ILP-3E5
3E6	10000 +40/–30%	≈ 5680	≈ 0	RM5/ILP-3E6

Properties of core sets under power conditions

GRADE	B (mT) at	CORE LOSS (W) at				
	H = 250 A/m; f = 25 kHz; T = 100 °C	f = 25 kHz; $\hat{B}$ = 200 mT; T = 100 °C	f = 100 kHz; $\hat{B}$ = 100 mT; T = 100 °C	f = 100 kHz; $\hat{B}$ = 200 mT; T = 25 °C	f = 100 kHz; $\hat{B}$ = 200 mT; T = 100 °C	f = 400 kHz; $\hat{B}$ = 50 mT; T = 100 °C
3C90	≥320	≤ 0.06	≤ 0.06	–	–	–
3C94	≥320	–	≤ 0.04	–	≤ 0.26	–
3C95	≥320	–	–	≤ 0.24	≤ 0.22	–
3C96	≥340	–	≤ 0.03	–	≤ 0.2	≤ 0.08
3F3	≥300	–	≤ 0.06	–	–	≤ 0.08
3F35	≥300	–	–	–	–	≤ 0.06
3F4	≥250	–	–	–	–	–

Properties of core sets under power conditions (continued)

GRADE	B (mT) at	CORE LOSS (W) at				
	H = 250 A/m; f = 25 kHz; T = 100 °C	f = 500 kHz; $\hat{B}$ = 50 mT; T = 100 °C	f = 500 kHz; $\hat{B}$ = 100 mT; T = 100 °C	f = 1 MHz; $\hat{B}$ = 30 mT; T = 100 °C	f = 1 MHz; $\hat{B}$ = 50 mT; T = 100 °C	f = 3 MHz; $\hat{B}$ = 10 mT; T = 100 °C
3C90	≥320	–	–	–	–	–
3C94	≥320	–	–	–	–	–
3C95	≥320	–	–	–	–	–
3C96	≥340	≤ 0.16	–	–	–	–
3F3	≥300	–	–	–	–	–
3F35	≥300	≤ 0.09	≤ 0.6	–	–	–
3F4	≥250	–	–	≤ 0.13	–	≤ 0.2
3F45	≥250	–	–	≤ 0.1	≤ 0.37	≤ 0.17

COIL FORMERS

General data

PARAMETER	SPECIFICATION
Coil former material	phenolformaldehyde (PF), glass reinforced, flame retardant in accordance with *"UL 94V-0"*; UL file number: E41429 (M)
Pin material	copper-clad steel, tin (Sn) plated
Maximum operating temperature	155 °C, *"IEC 60085"*, class F
Resistance to soldering heat	*"IEC 60068-2-20"*, Part 2, Test Tb, method 1B: 350 °C, 3.5 s
Solderability	*"IEC 60068-2-20"*, Part 2, Test Ta, method 1: 235 °C, 2 s

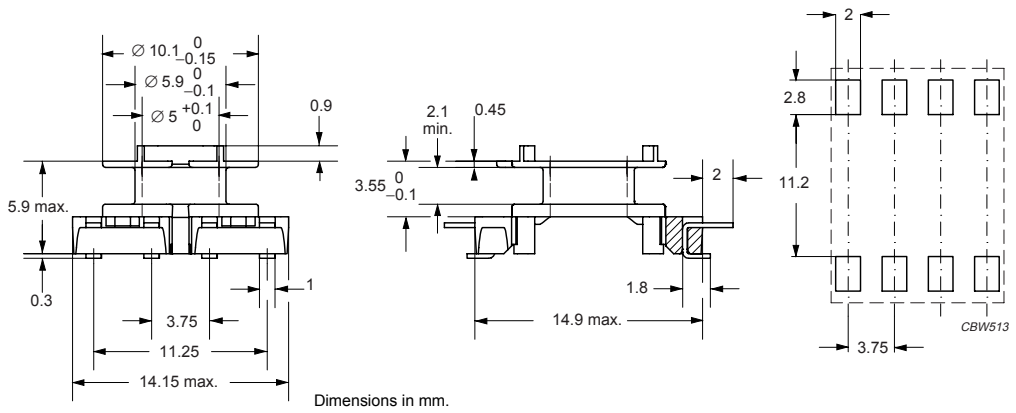

Fig.2 RM5/ILP SMD coil former.

Winding data and area product for 8-pads RM5/ILP SMD coil former

NUMBER OF SECTIONS	WINDING AREA (mm^2)	MINIMUM WINDING WIDTH (mm)	AVERAGE LENGTH OF TURN (mm)	AREA PRODUCT Ae x Aw (mm^4)	TYPE NUMBER
1	4.6	2.1	24.9	113	CSVS-RM5/LP-1S-8P

MOUNTING PARTS

General data

ITEM	SPECIFICATION
Clamping force	≈5 N
Clip material	stainless steel (CrNi)
Type number	CLI-RM4/5/ILP

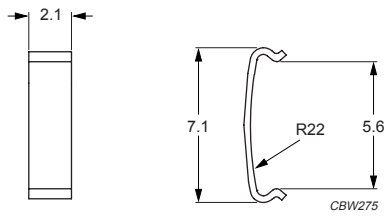

Dimensions in mm.

Fig.3 Mounting clip for RM5/ILP.

CORE SETS

Effective core parameters

SYMBOL	PARAMETER	VALUE	UNIT
Σ(l/A)	core factor (C1)	0.810	mm^{-1}
V_e	effective volume	810	mm^3
l_e	effective length	25.6	mm
A_e	effective area	32.0	mm^2
A_{min}	minimum area	23.8	mm^2
m	mass of set	≈ 4.5	g

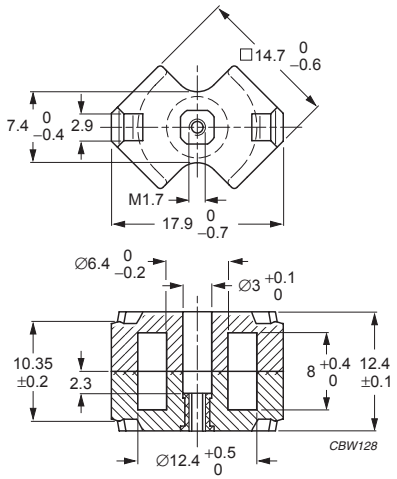

Dimensions in mm.

Fig.1 RM6R core set.

Core sets for filter applications

Clamping force for A_L measurements, 40 ±20 N.

GRADE	A_L (nH)	μ_e	TOTAL AIR GAP (μm)	TYPE NUMBER (WITH NUT)	TYPE NUMBER (WITHOUT NUT)
3D3 sup	40 ±3%	≈ 26	≈ 1200	RM6R-3D3-E40/N	RM6R-3D3-E40
	63 ±3%	≈ 41	≈ 700	RM6R-3D3-E63/N	RM6R-3D3-E63
	100 ±3%	≈ 65	≈ 400	RM6R-3D3-E100/N	RM6R-3D3-E100
	160 ±3%	≈ 103	≈ 200	RM6R-3D3-A160/N	RM6R-3D3-A160
	1000 ±25%	≈ 650	≈ 0	–	RM6R-3D3
3H3 sup	160 ±3%	≈ 103	≈ 230	RM6R-3H3-A160/N	RM6R-3H3-A160
	250 ±3%	≈ 161	≈ 110	RM6R-3H3-A250/N	RM6R-3H3-A250
	315 ±3%	≈ 203	≈ 90	RM6R-3H3-A315/N	RM6R-3H3-A315
	400 ±3%	≈ 258	≈ 70	RM6R-3H3-A400/N	RM6R-3H3-A400
	2200 ±25%	≈ 1420	≈ 0	–	RM6R-3H3

INDUCTANCE ADJUSTER

General data

PARAMETER	SPECIFICATION
Material of head and thread	polypropylene (PP), glass fibre reinforced
Maximum operating temperature	125 °C

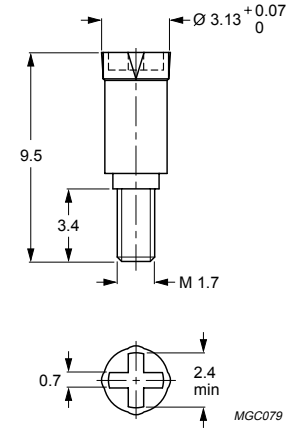

Dimensions in mm.

Fig.2 RM6R inductance adjuster.

Inductance adjuster selection chart sup **(applies to all types)**

GRADE	A_L (nH)	TYPES FOR LOW ADJUSTMENT	ΔL/L[1] %	TYPES FOR MEDIUM ADJUSTMENT	ΔL/L[1] %	TYPES FOR HIGH ADJUSTMENT	ΔL/L[1] %
3H3	40	–	–	–	–	ADJ-RM6-GREEN	20
	63	–	–	ADJ-RM6-GREEN	14	ADJ-RM6-RED	22
	100	ADJ-RM6-GREEN	10	ADJ-RM6-RED	16	–	–
	160	ADJ-RM6-GREEN	6	ADJ-RM6-RED	10	ADJ-RM6-WHITE	19
	200	ADJ-RM6-RED	8	ADJ-RM6-WHITE	15	ADJ-RM6-VIOLET	18
	250	ADJ-RM6-WHITE	12	ADJ-RM6-VIOLET	14	ADJ-RM6-BROWN	20
	315	ADJ-RM6-WHITE	9	ADJ-RM6-BROWN	15	ADJ-RM6-BLACK	22
	400	ADJ-RM6-VIOLET	8	ADJ-RM6-BLACK	16	ADJ-RM6-GREY	30
	630	ADJ-RM6-BLACK	9	ADJ-RM6-GREY	15	–	–
	1000	ADJ-RM6-BLACK	5	ADJ-RM6-GREY	8	–	–
	1250	–	–	ADJ-RM6-GREY	5	–	–
3D3	40	–	–	–	–	ADJ-RM6-GREEN	20
	63	–	–	ADJ-RM6-GREEN	14	ADJ-RM6-RED	23
	100	ADJ-RM6-GREEN	9	ADJ-RM6-RED	16	ADJ-RM6-WHITE	28
	160	ADJ-RM6-RED	10	ADJ-RM6-WHITE	17	–	–

Note

1. Maximum adjustment range.

COIL FORMERS

General data

PARAMETER	SPECIFICATION
Coil former material	phenolformaldehyde (PF), glass-reinforced, flame retardant in accordance with *"UL 94V-0"*; UL file number E167521(M)
Pin material	copper-tin alloy (CuSn), tin (Sn) plated
Maximum operating temperature	180 °C, *"IEC 60085"*, class H
Resistance to soldering heat	*"IEC 60068-2-20"*, Part 2, Test Tb, method 1B, 350 °C, 3.5 s
Solderability	*"IEC 60068-2-20"*, Part 2, Test Ta, method 1

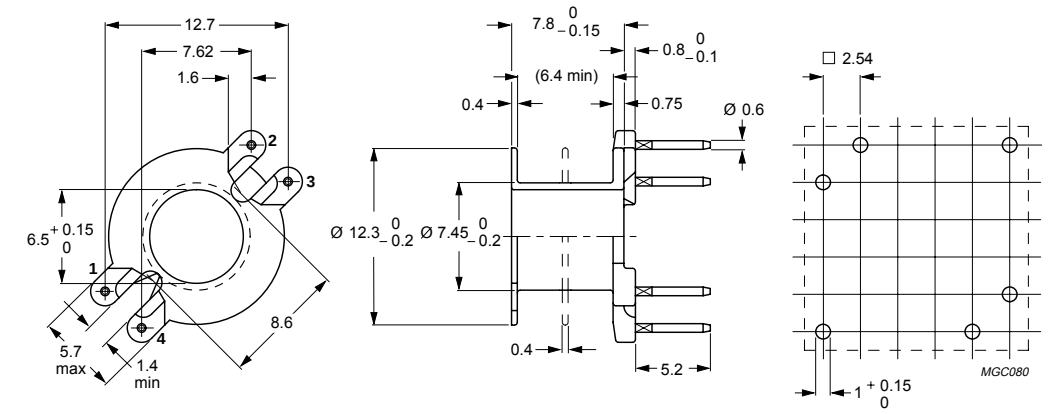

Dimensions in mm.

Fig.3 RM6R coil former; 4-pins.

Winding data and area product for 4-pins RM6R coil former

NUMBER OF SECTIONS	NUMBER OF PINS	PIN POSITIONS USED	AVERAGE LENGTH OF TURN (mm)	WINDING AREA (mm^2)	WINDING WIDTH (mm)	AREA PRODUCT Ae x Aw (mm^4)	TYPE NUMBER
1	4	all	30	15	6.4	480	CSV-RM6S/R-1S-4P
2	4	all	30	2 × 7.0	2 × 3.0	2 x 224	CSV-RM6S/R-2S-4P

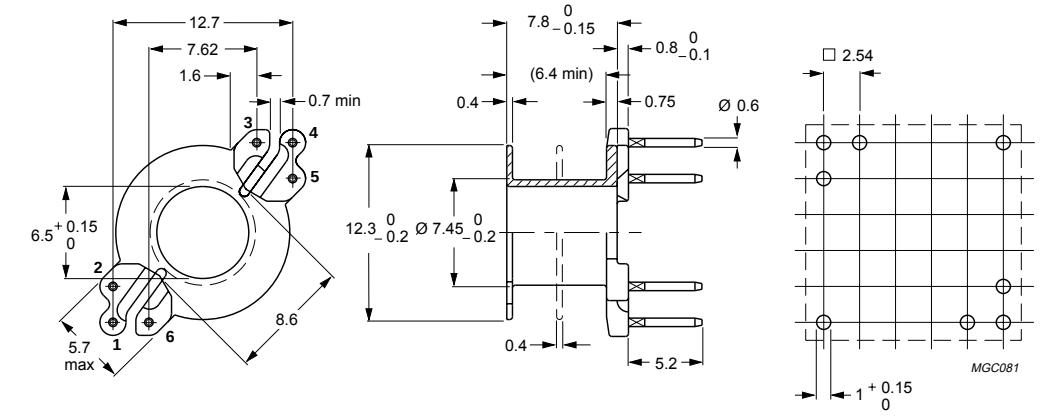

Dimensions in mm.

Fig.4 RM6R coil former; 6-pins.

Winding data and area product for 6-pins RM6R coil former

NUMBER OF SECTIONS	NUMBER OF PINS	PIN POSITIONS USED	AVERAGE LENGTH OF TURN (mm)	WINDING AREA (mm^2)	WINDING WIDTH (mm)	AREA PRODUCT Ae x Aw (mm^4)	TYPE NUMBER
1	6	all	30	15	6.4	480	CSV-RM6R-1S-6P
2	6	all	30	2×7.0	2×3.0	2 x 224	CSV-RM6R-2S-6P

MOUNTING PARTS

General data

ITEM	SPECIFICATION
Clamping force	≈ 20 N
Clip material	steel
Clip plating	silver (Ag)
Solderability	*"IEC 60068-2-20"*, Part 2, Test Ta, method 1
Type number	CLI/P-RM6

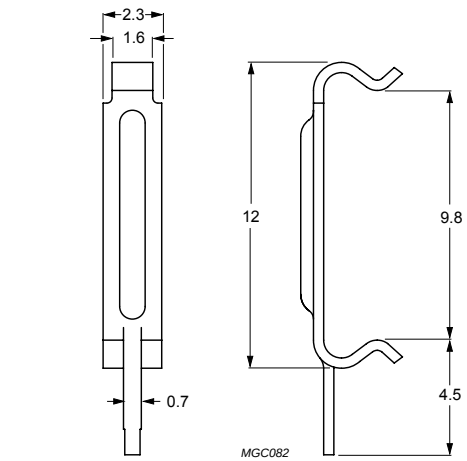

Dimensions in mm.

Fig.5 Mounting clip for RM6R.

CORE SETS

Effective core parameters

SYMBOL	PARAMETER	VALUE	UNIT
Σ(l/A)	core factor (C1)	0.863	mm^{-1}
V_e	effective volume	840	mm^3
l_e	effective length	27.3	mm
A_e	effective area	31.0	mm^2
A_{min}	minimum area	23.8	mm^2
m	mass of set	≈ 5.1	g

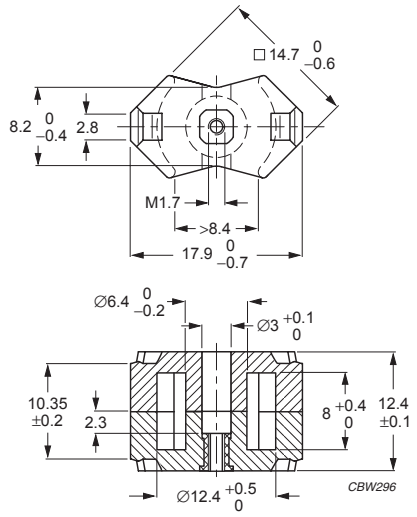

Dimensions in mm.

Fig.1 RM6S core set.

Core sets for filter applications

Clamping force for A_L measurements, 40 ±20 N.

GRADE	A_L (nH)	μ_e	TOTAL AIR GAP (μm)	TYPE NUMBER (WITH NUT)	TYPE NUMBER (WITHOUT NUT)
3D3 sup	63 ±3%	≈ 44	≈ 850	RM6S-3D3-E63/N	RM6S-3D3-E63
	100 ±3%	≈ 70	≈ 460	RM6S-3D3-E100/N	RM6S-3D3-E100
	160 ±3%	≈ 112	≈ 250	RM6S-3D3-A160/N	RM6S-3D3-A160
	950 ±25%	≈ 670	≈ 0	–	RM6S-3D3
3H3 sup	160 ±3%	≈ 112	≈ 280	RM6S-3H3-A160/N	RM6S-3H3-A160
	250 ±3%	≈ 175	≈ 160	RM6S-3H3-A250/N	RM6S-3H3-A250
	315 ±3%	≈ 221	≈ 120	RM6S-3H3-A315/N	RM6S-3H3-A315
	400 ±3%	≈ 280	≈ 90	RM6S-3H3-A400/N	RM6S-3H3-A400
	2100 ±25%	≈ 1470	≈ 0	–	RM6S-3H3

INDUCTANCE ADJUSTERS

General data

PARAMETER	SPECIFICATION
Material of head and thread	polypropylene (PP), glass fibre reinforced
Maximum operating temperature	125 °C

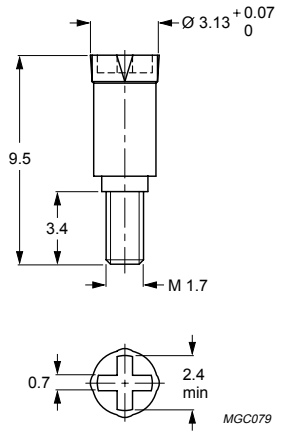

Dimensions in mm.

Fig.2 RM6S inductance adjuster.

Inductance adjuster selection chart sup (applies to all types)

GRADE	A_L (nH)	TYPES FOR LOW ADJUSTMENT	ΔL/L(1) %	TYPES FOR MEDIUM ADJUSTMENT	ΔL/L(1) %	TYPES FOR HIGH ADJUSTMENT	ΔL/L(1) %
3H3	40	–	–	–	–	ADJ-RM6-GREEN	20
	63	–	–	ADJ-RM6-GREEN	14	ADJ-RM6-RED	22
	100	ADJ-RM6-GREEN	10	ADJ-RM6-RED	16	–	–
	160	ADJ-RM6-GREEN	6	ADJ-RM6-RED	11	ADJ-RM6-WHITE	19
	200	ADJ-RM6-RED	9	ADJ-RM6-WHITE	15	ADJ-RM6-VIOLET	19
	250	ADJ-RM6-WHITE	12	ADJ-RM6-VIOLET	14	ADJ-RM6-BROWN	20
	315	ADJ-RM6-WHITE	9	ADJ-RM6-BROWN	15	ADJ-RM6-BLACK	23
	400	ADJ-RM6-VIOLET	8	ADJ-RM6-BLACK	16	ADJ-RM6-GREY	26
	630	ADJ-RM6-BLACK	9	ADJ-RM6-GREY	15	–	–
	1000	ADJ-RM6-BLACK	5	ADJ-RM6-GREY	9	–	–
	1250	–	–	ADJ-RM6-GREY	5	–	–
3D3	40	–	–	–	–	ADJ-RM6-GREEN	19
	63	–	–	ADJ-RM6-GREEN	14	ADJ-RM6-RED	22
	100	ADJ-RM6-GREEN	9	ADJ-RM6-RED	15	ADJ-RM6-WHITE	27
	160	ADJ-RM6-RED	9	ADJ-RM6-WHITE	16	–	–

Note

1. Maximum adjustment range.

COIL FORMERS

General data

PARAMETER	SPECIFICATION
Coil former material	phenolformaldehyde (PF), glass-reinforced, flame retardant in accordance with *"UL 94V-0"*; UL file number E167521(M)
Pin material	copper-tin alloy (CuSn), tin (Sn) plated
Maximum operating temperature	180 °C, *"IEC 60085"* , class H
Resistance to soldering heat	*"IEC 60068-2-20"*, Part 2, Test Tb, method 1B, 350 °C, 3.5 s
Solderability	*"IEC 60068-2-20"*, Part 2, Test Ta, method 1

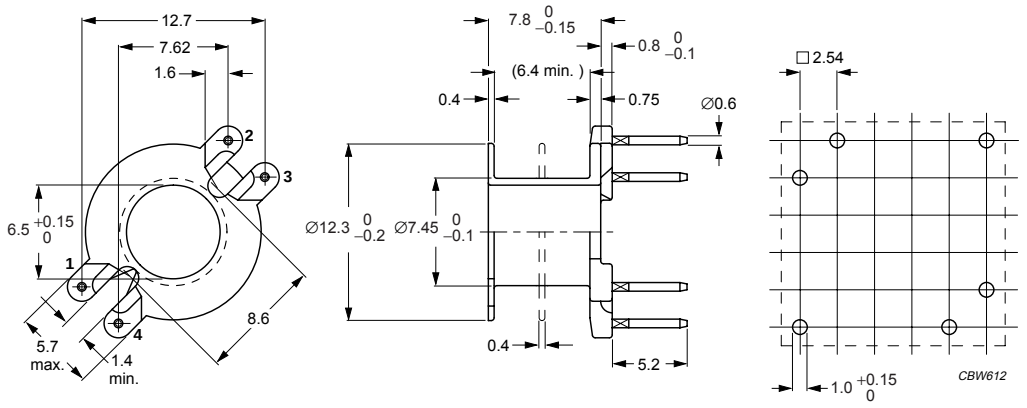

Dimensions in mm.

Fig.3 RM6S coil former; 4-pins.

Winding data and area product for 4-pins RM6S coil former

NUMBER OF SECTIONS	NUMBER OF PINS	PIN POSITIONS USED	WINDING AREA (mm^2)	WINDING WIDTH (mm)	AVERAGE LENGTH OF TURN (mm)	AREA PRODUCT Ae x Aw (mm^4)	TYPE NUMBER
1	4	all	15	6.4	30	465	CSV-RM6S/R-1S-4P
2	4	all	2×7.0	2×3.0	30	2 x 217	CSV-RM6S/R-2S-4P

General data

PARAMETER	SPECIFICATION
Coil former material	unsaturated polyester (UP), glass-reinforced, flame retardant in accordance with *"UL 94V-0"*; UL file number E61040 (M)
Solder pad material	copper-tin alloy CuSn), tin (Sn) plated
Maximum operating temperature	180 °C, *"IEC 60085"*, class H
Resistance to soldering heat	*"IEC 60068-2-20"*, Part 2, Test Tb, method 1B, 350 °C, 3.5 s
Solderability	*"IEC 60068-2-20"*, Part 2, Test Ta, method 1

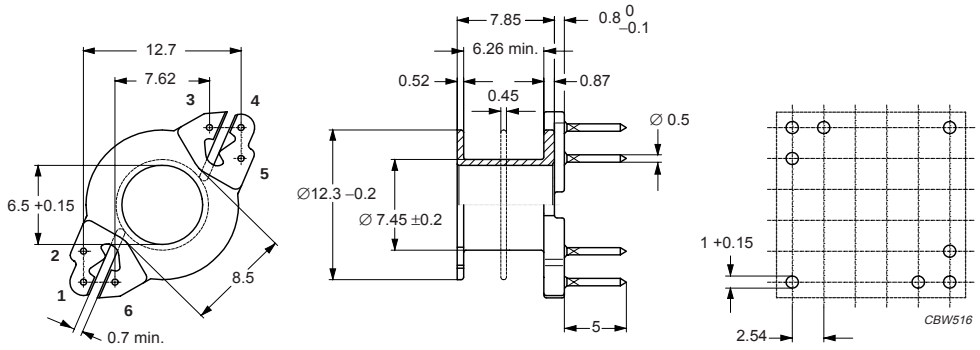

Dimensions in mm.

Fig.4 Coil former for RM6S; 6-pins.

Winding data and area product for RM6S coil former

NUMBER OF SECTIONS	NUMBER OF PINS	PIN POSITIONS USED	WINDING AREA (mm^2)	WINDING WIDTH (mm)	AVERAGE LENGTH OF TURN (mm)	AREA PRODUCT Ae x Aw (mm^4)	TYPE NUMBER
1	6	all	15.0	6.3	30.0	465	CSV-RM6S-1S-6P-G(1)
1	5	1, 2, 3, 5, 6	15.0	6.3	30.0	465	CSV-RM6S-1S-5P-G(1)
1	4	2, 3, 5, 6	15.0	6.3	30.0	465	CSV-RM6S-1S-4P-G(1)
2	6	all	2 × 7.0	2 × 3	30.0	2 x 217	CSV-RM6S-2S-6P-G(1)

Note

1. Also available with post-inserted pins.

General data

PARAMETER	SPECIFICATION
Coil former material	unsaturated polyester (UP), glass-reinforced, flame retardant in accordance with *"UL 94V-0"*; UL file number E61040 (M)
Solder pad material	copper-clad steel, tin (Sn) plated
Maximum operating temperature	180 °C, *"IEC 60085"*, class H
Resistance to soldering heat	*"IEC 60068-2-20"*, Part 2, Test Tb, method 1B, 350 °C, 3.5 s
Solderability	*"IEC 60068-2-20"*, Part 2, Test Ta, method 1

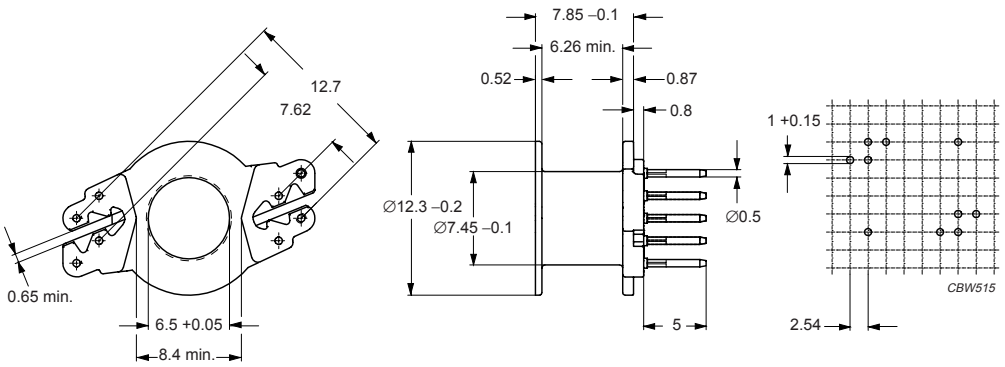

Dimensions in mm.

Fig.5 Coil former for RM6S; 8-pins.

Winding data and area product for RM6S coil former

NUMBER OF SECTIONS	NUMBER OF PINS	WINDING AREA (mm^2)	WINDING WIDTH (mm)	AVERAGE LENGTH OF TURN (mm)	AREA PRODUCT Ae x Aw (mm^4)	TYPE NUMBER
1	8	14.5	6.26	30.7	450	CSV-RM6S-1S-8P

MOUNTING PARTS

General data

ITEM	SPECIFICATION
Clamping force	≈20 N
Clip material	steel
Clip plating	silver (Ag)
Solderability	*"IEC 60068-2-20"*, Part 2, Test Ta, method 1
Type number	CLI/P-RM6

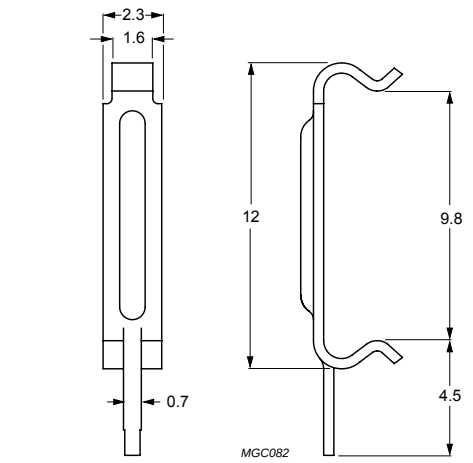

Dimensions in mm.

Fig.6 Mounting clip for RM6S.

CORE SETS

Effective core parameters

SYMBOL	PARAMETER	VALUE	UNIT
Σ(l/A)	core factor (C1)	0.784	mm^{-1}
V_e	effective volume	1090	mm^3
l_e	effective length	29.2	mm
A_e	effective area	37.0	mm^2
A_{min}	minimum area	31.2	mm^2
m	mass of set	≈ 5.5	g

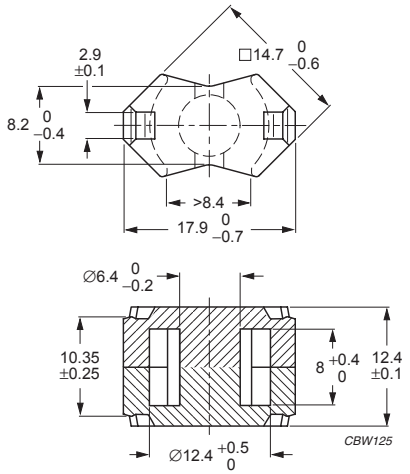

Dimensions in mm.

Fig.1 RM6S/I core set.

Core sets for filter applications

Clamping force for A_L measurements, 20 ±10 N.

GRADE	A_L (nH)	μ_e	AIR GAP (μm)	TYPE NUMBER
3B46 des	3650 ± 25 %	≈ 2280	≈ 0	RM6S/I-3B46
3D3	160 ±3%	≈ 100	≈ 300	RM6S/I-3D3-A160
	250 ±5%	≈ 156	≈ 170	RM6S/I-3D3-A250
	315 ±8%	≈ 197	≈ 120	RM6S/I-3D3-A315
	1050 ±25%	≈ 655	≈ 0	RM6S/I-3D3
3H3	315 ±3%	≈ 198	≈ 150	RM6S/I-3H3-A315
	400 ±3%	≈ 251	≈ 110	RM6S/I-3H3-A400
	630 ±5%	≈ 396	≈ 65	RM6S/I-3H3-A630
	2350 ±25%	≈ 1470	≈ 0	RM6S/I-3H3

Core sets for general purpose transformers and power applications

Clamping force for A_L measurements, 20 ±10 N.

GRADE	A_L (nH)	μ_e	TOTAL AIR GAP (μm)	TYPE NUMBER
3C81	63 ±3%	≈ 40	≈ 1080	RM6S/I-3C81-E63
	100 ±3%	≈ 63	≈ 600	RM6S/I-3C81-A100
	160 ±3%	≈ 100	≈ 340	RM6S/I-3C81-A160
	250 ±3%	≈ 157	≈ 200	RM6S/I-3C81-A250
	315 ±3%	≈ 198	≈ 150	RM6S/I-3C81-A315
	3000 ±25%	≈ 1870	≈ 0	RM6S/I-3C81

GRADE	A_L (nH)	μ_e	TOTAL AIR GAP (μm)	TYPE NUMBER
3C90	63 ±3%	≈ 40	≈ 1080	RM6S/I-3C90-A63
	100 ±3%	≈ 63	≈ 600	RM6S/I-3C90-A100
	160 ±3%	≈ 100	≈ 340	RM6S/I-3C90-A160
	250 ±3%	≈ 157	≈ 200	RM6S/I-3C90-A250
	315 ±3%	≈ 198	≈ 150	RM6S/I-3C90-A315
	400 ±3%	≈ 251	≈ 110	RM6S/I-3C90-A400
	630 ±5%	≈ 396	≈ 65	RM6S/I-3C90-A630
	2600 ±25%	≈ 1630	≈ 0	RM6S/I-3C90
3C91 des	3000 ±25%	≈ 1880	≈ 0	RM6S/I-3C91
3C94	63 ±3%	≈ 40	≈ 1080	RM6S/I-3C94-A63
	100 ±3%	≈ 63	≈ 600	RM6S/I-3C94-A100
	160 ±3%	≈ 100	≈ 340	RM6S/I-3C94-A160
	250 ±3%	≈ 157	≈ 200	RM6S/I-3C94-A250
	315 ±3%	≈ 198	≈ 150	RM6S/I-3C94-A315
	400 ±3%	≈ 251	≈ 110	RM6S/I-3C94-A400
	630 ±5%	≈ 396	≈ 65	RM6S/I-3C94-A630
	2600 ±25%	≈ 1630	≈ 0	RM6S/I-3C94
3C95 des	3000 ±25%	≈ 1880	≈ 0	RM6S/I-3C95
3C96 des	2350 ±25%	≈ 1470	≈ 0	RM6S/I-3C96
3F3	63 ±3%	≈ 40	≈ 1080	RM6S/I-3F3-A63
	100 ±3%	≈ 63	≈ 600	RM6S/I-3F3-A100
	160 ±3%	≈ 100	≈ 340	RM6S/I-3F3-A160
	250 ±3%	≈ 157	≈ 200	RM6S/I-3F3-A250
	315 ±3%	≈ 198	≈ 150	RM6S/I-3F3-A315
	2150 ±25%	≈ 1350	≈ 0	RM6S/I-3F3
3F35 prot	1750 ±25%	≈ 1100	≈ 0	RM6S/I-3F35
3F4 des	63 ±3%	≈ 39	≈ 1040	RM6S/I-3F4-A63
	100 ±3%	≈ 62	≈ 570	RM6S/I-3F4-A100
	160 ±3%	≈ 100	≈ 310	RM6S/I-3F4-A160
	250 ±3%	≈ 156	≈ 170	RM6S/I-3F4-A250
	315 ±3%	≈ 197	≈ 130	RM6S/I-3F4-A315
	1250 ±25%	≈ 780	≈ 0	RM6S/I-3F4
3F45 prot	1250 ±25%	≈ 780	≈ 0	RM6S/I-3F45

Core sets of high permeability grades

Clamping force for A_L measurements, 20 ±10 N.

GRADE	A_L (nH)	μ_e	TYPE NUMBER
3E27	6000 ± 25%	≈ 3770	RM6S/I-3E27
3E5	8600 +40/–30%	≈ 5400	RM6S/I-3E5
3E6	11000 +40/–30%	≈ 6910	RM6S/I-3E6

Properties of core sets under power conditions

GRADE	B (mT) at	CORE LOSS (W) at				
	H = 250 A/m; f = 25 kHz; T = 100 °C	f = 25 kHz; $\hat{B}$ = 200 mT; T = 100 °C	f = 100 kHz; $\hat{B}$ = 100 mT; T = 100 °C	f = 100 kHz; $\hat{B}$ = 200 mT; T = 25 °C	f = 100 kHz; $\hat{B}$ = 200 mT; T = 100 °C	f = 400 kHz; $\hat{B}$ = 50 mT; T = 100 °C
3C81	≥320	≤ 0.25	–	–	–	–
3C90	≥320	≤ 0.13	≤ 0.14	–	–	–
3C91	≥315	–	≤ 0.08(1)	–	≤ 0.4(1)	–
3C94	≥320	–	≤ 0.11	–	≤ 0.6	–
3C95	≥320	–	–	≤ 0.64	≤ 0.61	–
3C96	≥340	–	≤ 0.08	–	≤ 0.4	≤ 0.2
3F3	≥315	–	≤ 0.14	–	–	≤ 0.2
3F35	≥315	–	–	–	–	≤ 0.12
3F4	≥250	–	–	–	–	–

Properties of core sets under power conditions (continued)

GRADE	B (mT) at	CORE LOSS (W) at				
	H = 250 A/m; f = 25 kHz; T = 100 °C	f = 500 kHz; $\hat{B}$ = 50 mT; T = 100 °C	f = 500 kHz; $\hat{B}$ = 100 mT; T = 100 °C	f = 1 MHz; $\hat{B}$ = 30 mT; T = 100 °C	f = 1 MHz; $\hat{B}$ = 50 mT; T = 100 °C	f = 3 MHz; $\hat{B}$ = 10 mT; T = 100 °C
3C96	≥340	≤ 0.5	–	–	–	–
3F3	≥315	–	–	–	–	–
3F35	≥315	≤ 0.16	≤ 1.3	–	–	–
3F4	≥250	–	–	≤ 0.33	–	≤ 0.53
3F45	≥250	–	–	≤ 0.25	≤ 0.94	≤ 0.44

Note

1. Measured at 60 °C.

COIL FORMERS

General data

PARAMETER	DESCRIPTION
Coil former material	polybutyleneterephthalate (PBT), glass-reinforced, flame retardant in accordance with *"UL 94V-0"*; UL file number E45329(M)
Pin material	copper-tin alloy (CuSn), tin (Sn) plated
Maximum operating temperature	155 °C, *"IEC 60085"*, class F
Resistance to soldering heat	*"IEC 60068-2-20"*, Part 2, Test Tb, method 1B, 350 °C, 3.5 s
Solderability	*"IEC 60068-2-20"*, Part 2, Test Ta, method 1

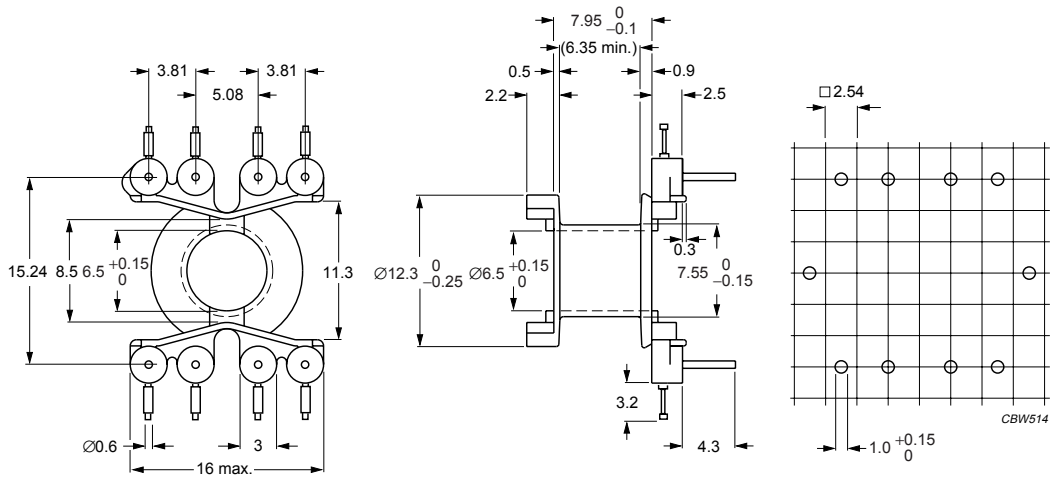

Dimensions in mm.

Fig.2 RM6S/I coil former; 8-pins (DIL).

Winding data and area product for 8-pins RM6S/I coil former (DIL)

NUMBER OF SECTIONS	WINDING AREA (mm^2)	WINDING WIDTH (mm)	AVERAGE LENGTH OF TURN (mm)	AREA PRODUCT Ae x Aw (mm^4)	TYPE NUMBER
1	15.7	6.2	31	5.81	CPV-RM6S/I-1S-8PD

General data SMD coil former

PARAMETER	SPECIFICATION
Coil former material	phenolformaldehyde (PF), glass-reinforced, flame retardant in accordance with *"UL 94V-0"*; UL file number E41429 (M)
Solder pad material	copper-tin alloy (CuSn), tin (Sn) plated
Maximum operating temperature	155 °C, *"IEC 60085"*, class F
Resistance to soldering heat	*"IEC 60068-2-20"*, Part 2, Test Tb, method 1B, 350 °C, 3.5 s
Solderability	*"IEC 60068-2-20"*, Part 2, Test Ta, method 1

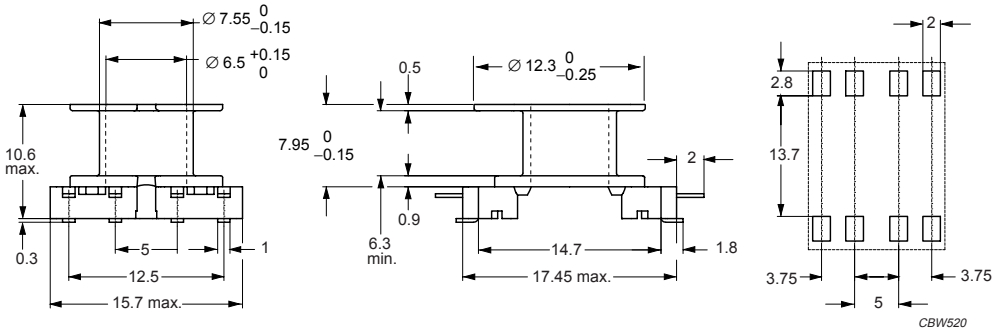

Dimensions in mm.

Fig.3 SMD coil former for RM6S/I.

Winding data and area product for RM6S/I coil former (SMD)

NUMBER OF SECTIONS	NUMBER OF SOLDER PADS	WINDING AREA (mm^2)	WINDING WIDTH (mm)	AVERAGE LENGTH OF TURN (mm)	AREA PRODUCT Ae x Aw (mm^4)	TYPE NUMBER
1	8	14	6.3	31	518	CSVS-RM6S-1S-8P

General data SMD coil former

PARAMETER	SPECIFICATION
Coil former material	phenolformaldehyde (PF), glass-reinforced, flame retardant in accordance with *"UL 94V-0"*; UL file number E41429 (M)
Solder pad material	copper-tin alloy (CuSn), tin (Sn) plated
Maximum operating temperature	155 °C, *"IEC 60085"*, class F
Resistance to soldering heat	*"IEC 60068-2-20"*, Part 2, Test Tb, method 1B, 350 °C, 3.5 s
Solderability	*"IEC 60068-2-20"*, Part 2, Test Ta, method 1

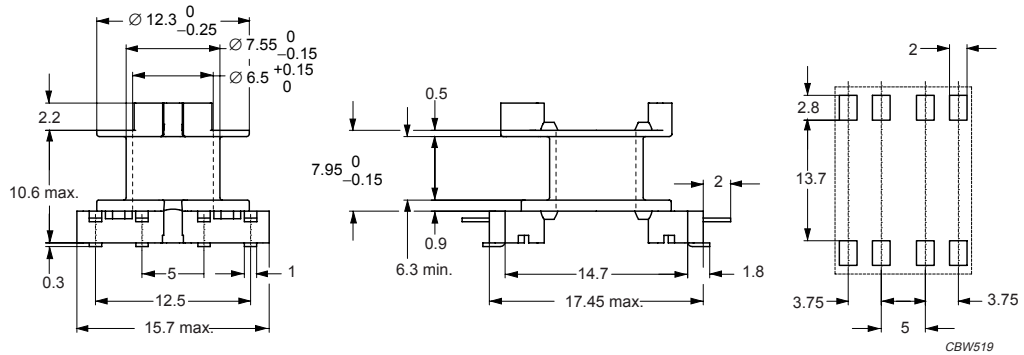

Dimensions in mm.

Fig.4 SMD coil former for RM6S/I.

Winding data and area product for RM6S/I coil former (SMD)

NUMBER OF SECTIONS	NUMBER OF SOLDER PADS	WINDING AREA (mm^2)	WINDING WIDTH (mm)	AVERAGE LENGTH OF TURN (mm)	AREA PRODUCT Ae x Aw (mm^4)	TYPE NUMBER
1	8	14.2	6.3	31.4	525	CSVS-RM6S-1S-8P-B

Additional coil formers are those of *"RM6S"*, but *"area product"* is different..

Winding data and area product (for RM6S/I) for 4-pins RM6S coil former

NUMBER OF SECTIONS	NUMBER OF PINS	PIN POSITIONS USED	WINDING AREA (mm^2)	WINDING WIDTH (mm)	AVERAGE LENGTH OF TURN (mm)	AREA PRODUCT Ae x Aw (mm^4)	TYPE NUMBER
1	4	all	15	6.4	30	555	CSV-RM6S/R-1S-4P
2	4	all	2×7.0	2×3.0	30	2 x 259	CSV-RM6S/R-2S-4P

Winding data and area product (for RM6S/I) for RM6S coil former

NUMBER OF SECTIONS	NUMBER OF PINS	PIN POSITIONS USED	WINDING AREA (mm^2)	WINDING WIDTH (mm)	AVERAGE LENGTH OF TURN (mm)	AREA PRODUCT Ae x Aw (mm^4)	TYPE NUMBER
1	6	all	15.0	6.3	30.0	555	CSV-RM6S-1S-6P-G(1)
1	5	1, 2, 3, 5, 6	15.0	6.3	30.0	555	CSV-RM6S-1S-5P-G(1)
1	4	2, 3, 5, 6	15.0	6.3	30.0	555	CSV-RM6S-1S-4P-G(1)
2	6	all	2×7.0	2×3	30.0	2 x 259	CSV-RM6S-2S-6P-G(1)

Note 1

Also available with post-inserted pins.

Winding data and area product (for RM6S/I) for RM6S coil former

NUMBER OF SECTIONS	NUMBER OF PINS	WINDING AREA (mm^2)	WINDING WIDTH (mm)	AVERAGE LENGTH OF TURN (mm)	AREA PRODUCT Ae x Aw (mm^4)	TYPE NUMBER
1	8	14.5	6.26	30.7	536	CSV-RM6S-1S-8P

MOUNTING PARTS

General data

ITEM	SPECIFICATION
Clamping force	≈10 N
Clip material	stainless steel (CrNi)
Clip plating	tin (Sn)
Solderability	*"IEC 60068-2-20"*, Part 2, Test Ta, method 1
Type number	CLI/P-RM6/I

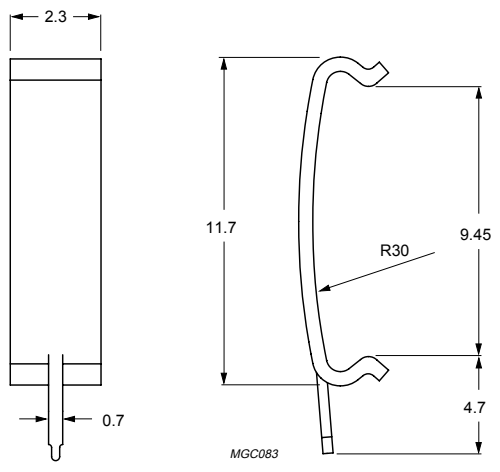

Dimensions in mm.

Fig.5 Mounting clip with earth pin for RM6/I.

General data mounting clip without earth pin

ITEM	SPECIFICATION
Clamping force	≈10 N
Clip material	stainless steel (CrNi)
Type number	CLI-RM6/I

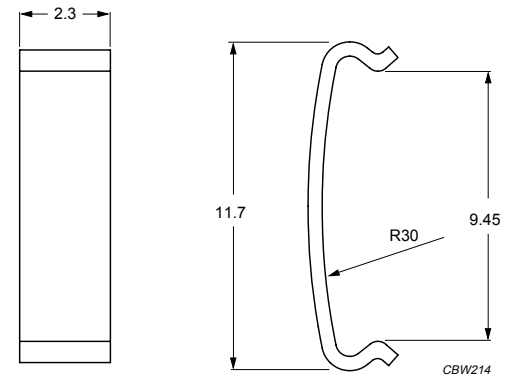

Dimensions in mm.

Fig.6 Mounting clip without earth pin for RM6/I.

CORE SETS

Effective core parameters

SYMBOL	PARAMETER	VALUE	UNIT
Σ(l/A)	core factor (C1)	0.580	mm^{-1}
V_e	effective volume	820	mm^3
l_e	effective length	21.8	mm
A_e	effective area	37.5	mm^2
A_{min}	minimum area	31.2	mm^2
m	mass of set	≈ 4.4	g

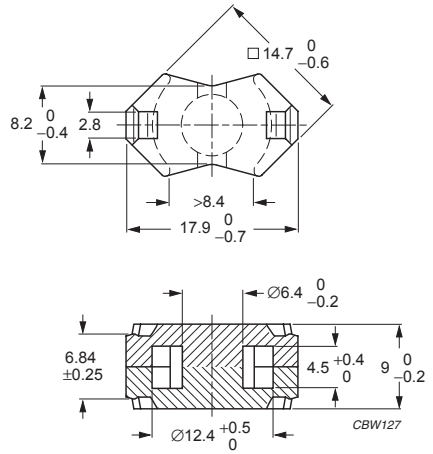

Dimensions in mm.

Fig.1 RM6S/ILP core set.

Core sets for filter applications

Clamping force for A_L measurements, 20 ±10 N.

GRADE	A_L (nH)	μ_e	AIR GAP (μm)	TYPE NUMBER
3B46 des	4000 ± 25 %	≈ 1850	≈0	RM6S/ILP-3B46
3D3	160 ±3%	≈74	≈310	RM6S/ILP-3D3-A160
	250 ±5%	≈116	≈180	RM6S/ILP-3D3-A250
	315 ±5%	≈146	≈130	RM6S/ILP-3D3-A315
	1350 ±25%	≈625	≈0	RM6S/ILP-3D3
3H3	315 ±3%	≈146	≈150	RM6S/ILP-3H3-A315
	400 ±5%	≈185	≈120	RM6S/ILP-3H3-A400
	630 ±8%	≈291	≈70	RM6S/ILP-3H3-A630
	2900 ±25%	≈1340	≈0	RM6S/ILP-3H3

Core sets for general purpose transformers and power applications

Clamping force for A_L measurements, 20 ±10 N.

GRADE	A_L (nH)	μ_e	AIR GAP (μm)	TYPE NUMBER
3C90	3175 ±25%	≈1470	≈0	RM6S/ILP-3C90
3C94	3175 ±25%	≈1470	≈0	RM6S/ILP-3C94
3C95 des	3730 ±25%	≈1725	≈0	RM6S/ILP-3C95
3C96 des	2900 ±25%	≈1340	≈0	RM6S/ILP-3C96
3F3	2700 ±25%	≈1250	≈0	RM6S/ILP-3F3

GRADE	A_L (nH)	μ_e	AIR GAP (μm)	TYPE NUMBER
3F35 prot	2200 ±25%	≈1020	≈0	RM6S/ILP-3F35
3F4 des	1600 ±25%	≈740	≈0	RM6S/ILP-3F4
3F45 prot	1600 ±25%	≈740	≈0	RM6S/ILP-3F45

Core sets of high permeability grades

Clamping force for A_L measurements, 20 ±10 N.

GRADE	A_L (nH)	μ_e	AIR GAP (μm)	TYPE NUMBER
3E5	10500 +40/–30%	≈ 4860	≈ 0	RM6S/ILP-3E5
3E6	13000 +40/–30%	≈ 6010	≈ 0	RM6S/ILP-3E6

Properties of core sets under power conditions

GRADE	B (mT) at	CORE LOSS (W) at				
	H = 250 A/m; f = 25 kHz; T = 100 °C	f = 25 kHz; $\hat{B}$ = 200 mT; T = 100 °C	f = 100 kHz; $\hat{B}$ = 100 mT; T = 100 °C	f = 100 kHz; $\hat{B}$ = 200 mT; T = 25 °C	f = 100 kHz; $\hat{B}$ = 200 mT; T = 100 °C	f = 400 kHz; $\hat{B}$ = 50 mT; T = 100 °C
3C90	≥320	≤ 0.10	≤ 0.11	–	–	–
3C94	≥320	–	≤ 0.08	–	≤ 0.45	–
3C95	≥320	–	–	≤ 0.45	≤ 0.43	–
3C96	≥340	–	≤ 0.06	–	≤ 0.35	≤ 0.15
3F3	≥300	–	≤ 0.10	–	–	≤ 0.15
3F35	≥300	–	–	–	–	≤ 0.08
3F4	≥250	–	–	–	–	–

Properties of core sets under power conditions (continued)

GRADE	B (mT) at	CORE LOSS (W) at				
	H = 250 A/m; f = 25 kHz; T = 100 °C	f = 500 kHz; $\hat{B}$ = 50 mT; T = 100 °C	f = 500 kHz; $\hat{B}$ = 100 mT; T = 100 °C	f = 1 MHz; $\hat{B}$ = 30 mT; T = 100 °C	f = 1 MHz; $\hat{B}$ = 50 mT; T = 100 °C	f = 3 MHz; $\hat{B}$ = 10 mT; T = 100 °C
3C90	≥320	–	–	–	–	–
3C94	≥320	–	–	–	–	–
3C95	≥320	–	–	–	–	–
3C96	≥340	≤ 0.3	–	–	–	–
3F3	≥300	–	–	–	–	–
3F35	≥300	≤ 0.15	≤ 1.0	–	–	–
3F4	≥250	–	–	≤ 0.25	–	≤ 0.4
3F45	≥250	–	–	≤ 0.19	≤ 0.7	≤ 0.33

COIL FORMERS

General data

PARAMETER	DESCRIPTION
Coil former material	phenolformaldehyde (PF), glass-reinforced, flame retardant in accordance with *"UL 94V-0"*; UL file number E41429 (M)
Solder pad material	copper-tin alloy (CuSn), tin (Sn) plated
Maximum operating temperature	155 °C, *"IEC 60085"*, class F
Resistance to soldering heat	*"IEC 60068-2-20"*, Part 2, Test Tb, method 1B, 350 °C, 3.5 s
Solderability	*"IEC 60068-2-20"*, Part 2, Test Ta, method 1

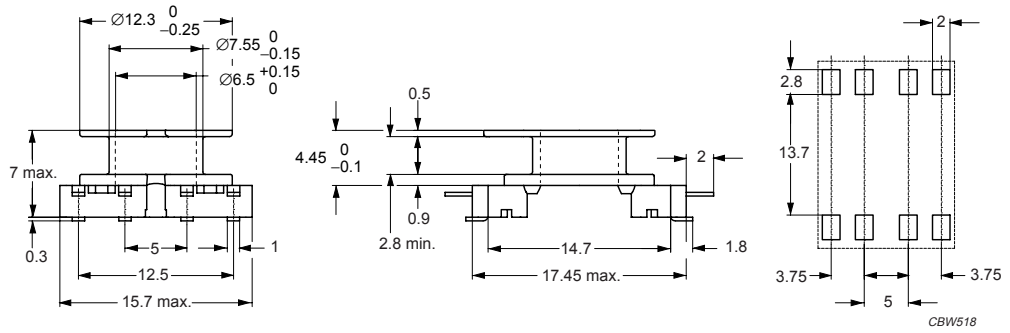

Dimensions in mm.

Fig.2 SMD coil former for RM6S/ILP.

Winding data and area product for RM6S/ILP coil former (SMD)

NUMBER OF SECTIONS	NUMBER OF SOLDER PADS	WINDING AREA (mm^2)	WINDING WIDTH (mm)	AVERAGE LENGTH OF TURN (mm)	AREA PRODUCT Ae x Aw (mm^4)	TYPE NUMBER
1	8	6.3	2.85	31.0	236	CSVS-RM6S/LP-1S-8P

General data (continued)

PARAMETER	DESCRIPTION
Coil former material	phenolformaldehyde (PF), glass-reinforced, flame retardant in accordance with *"UL 94V-0"*; UL file number E41429 (M)
Solder pad material	copper-tin alloy (CuSn), tin (Sn) plated
Maximum operating temperature	155 °C, *"IEC 60085",* class F
Resistance to soldering heat	*"IEC 60068-2-20"*, Part 2, Test Tb, method 1B, 350 °C, 3.5 s
Solderability	*"IEC 60068-2-20"*, Part 2, Test Ta, method 1

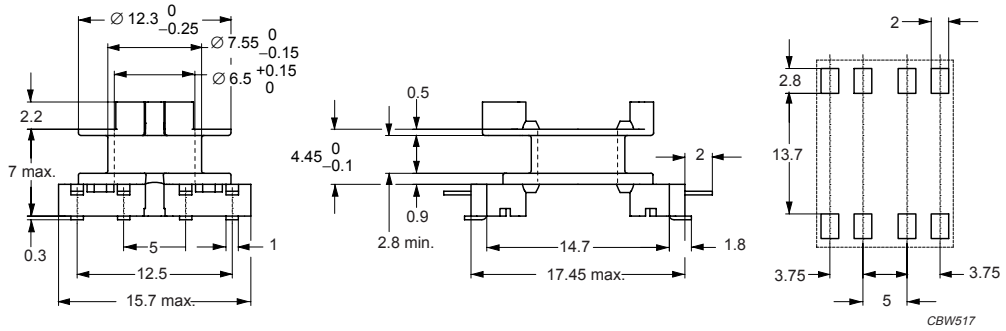

Dimensions in mm.

Fig.3 SMD coil former for RM6S/ILP.

Winding data and area product for RM6S/ILP coil former (SMD)

NUMBER OF SECTIONS	NUMBER OF SOLDER PADS	WINDING AREA (mm^2)	WINDING WIDTH (mm)	AVERAGE LENGTH OF TURN (mm)	AREA PRODUCT Ae x Aw (mm^4)	TYPE NUMBER
1	8	6.4	2.85	31.4	240	CSVS-RM6S/LP-1S-8P-B

MOUNTING PARTS

General data

ITEM	SPECIFICATION
Clamping force	≈10 N
Clip material	stainless steel (CrNi)
Type number	CLI-RM6/ILP

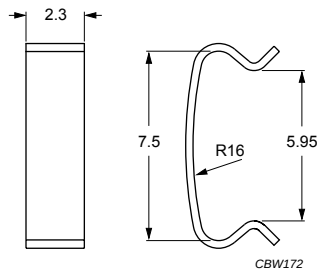

Dimensions in mm.

Fig.4 Mounting clip for RM6/ILP.

CORE SETS

Effective core parameters

SYMBOL	PARAMETER	VALUE	UNIT
Σ(l/A)	core factor (C1)	0.680	mm^{-1}
V_e	effective volume	1325	mm^3
l_e	effective length	30.0	mm
A_e	effective area	44.1	mm^2
A_{min}	minimum area	39.6	mm^2
m	mass of set	≈ 7.5	g

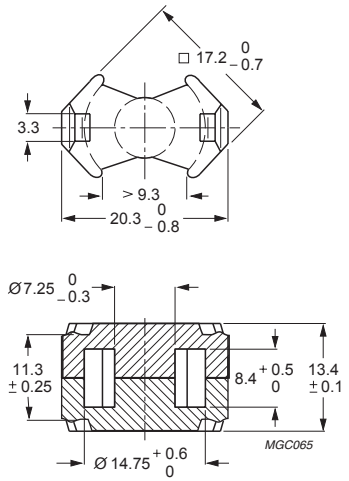

Dimensions in mm.

Fig.1 RM7/I core set.

Core sets for general purpose transformers and power applications

Clamping force for A_L measurements 40 ±20 N.

GRADE	A_L (nH)	μ_e	AIR GAP (μm)	TYPE NUMBER
3C90 sup	100 ±3%	≈ 54	≈ 730	RM7/I-3C90-A100
	160 ±3%	≈ 87	≈ 410	RM7/I-3C90-A160
	250 ±3%	≈ 135	≈ 240	RM7/I-3C90-A250
	3000 ±25%	≈ 1620	≈ 0	RM7/I-3C90
3F3 sup	100 ±3%	≈ 54	≈ 730	RM7/I-3F3-A100
	160 ±3%	≈ 87	≈ 410	RM7/I-3F3-A160
	250 ±3%	≈ 135	≈ 240	RM7/I-3F3-A250
	2500 ±25%	≈ 1350	≈ 0	RM7/I-3F3

Properties of core sets under power conditions

GRADE	B (mT) at	CORE LOSS (W) at		
	H = 250 A/m; f = 25 kHz; T = 100 °C	f = 25 kHz; $\hat{B}$ = 200 mT; T = 100 °C	f = 100 kHz; $\hat{B}$ = 100 mT; T = 100 °C	f = 400 kHz; $\hat{B}$ = 50 mT; T = 100 °C
3C90	≥320	≤ 0.16	≤ 0.17	–
3F3	≥315	–	≤ 0.15	≤ 0.25

COIL FORMER

General data

PARAMETER	SPECIFICATION
Coil former material	phenolformaldehyde (PF), glass-reinforced, flame retardant in accordance with UL 94V-0; UL file number E167521(M)
Pin material	copper-tin alloy (CuSn), tin (Sn) plated
Maximum operating temperature	180 °C, *"IEC 60085"*, class H
Resistance to soldering heat	*"IEC 60068-2-20"*, Part 2, Test Tb, method 1B, 350 °C, 3.5 s
Solderability	*"IEC 60068-2-20"*, Part 2, Test Ta, method 1

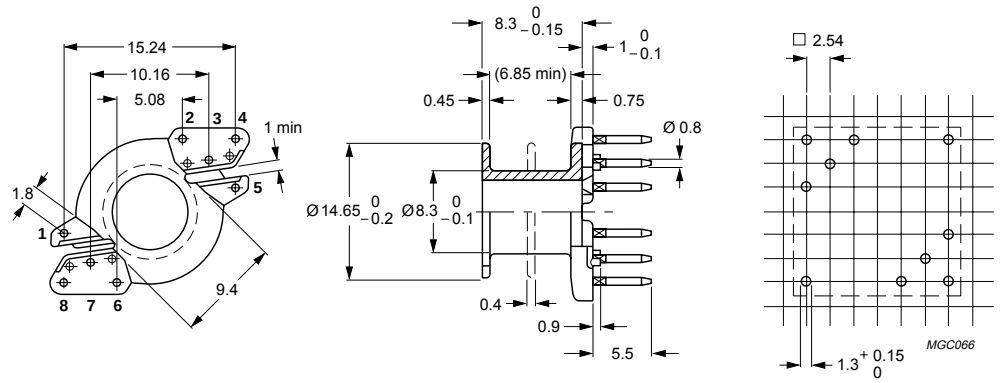

Dimensions in mm.

Fig.2 RM7/I coil former.

Winding data and area product for RM7/I coil former

NUMBER OF SECTIONS	NUMBER OF PINS	PIN POSITIONS USED	AVERAGE LENGTH OF TURN (mm)	WINDING AREA (mm^2)	WINDING WIDTH (mm)	AREA PRODUCT Ae x Aw (mm^4)	TYPE NUMBER
1	4	1, 2, 5, 6	35	21	6.85	926	CSV-RM7-1S-4P
1	8	all	35	21	6.85	926	CSV-RM7-1S-8P
2	8	all	35	2 × 9.8	2 × 3.2	2 x 432	CSV-RM7-2S-8P
1	5	1, 2, 4, 5, 8	35	21	6.85	926	CSV-RM7-1S-5P
2	5	1, 2, 4, 5, 8	35	2 × 9.8	2 × 3.2	2 x 432	CSV-RM7-2S-5P

MOUNTING PARTS

General data

ITEM	SPECIFICATION
Clamping force	≈20 N
Clip material	steel
Clip plating	tin (Sn)
Solderability	*"IEC 60068-2-20"*, Part 2, Test Ta, method 1
Type number	CLI/P-RM7

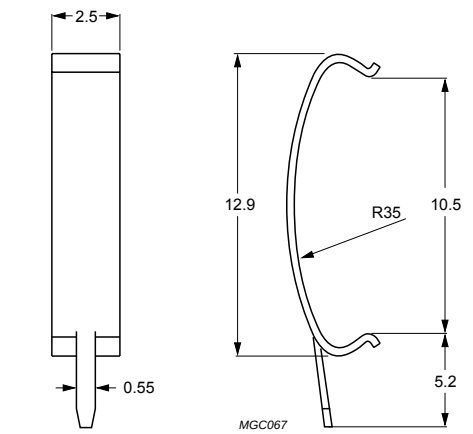

Dimensions in mm.

Fig.3 Mounting clip for RM7/I.

COIL FORMER

General data

PARAMETER	SPECIFICATION
Coil former material	phenolformaldehyde (PF), glass-reinforced, flame retardant in accordance with UL 94V-0; UL file number E41429 (M)
Pin material	copper-tin alloy (CuSn), tin (Sn) plated
Maximum operating temperature	155 °C, *"IEC 60085"*, class F
Resistance to soldering heat	*"IEC 60068-2-20"*, Part 2, Test Tb, method 1B, 350 °C, 3.5 s
Solderability	*"IEC 60068-2-20"*, Part 2, Test Ta, method 1

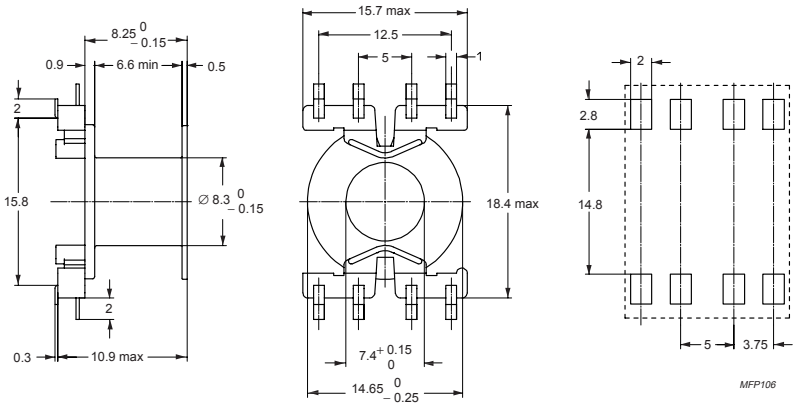

Dimensions in mm.

Fig.4 RM7/I coil former, 8-pins.

Winding data and area product for RM7/I coil former

NUMBER OF SECTIONS	NUMBER OF PINS	PIN POSITIONS USED	AVERAGE LENGTH OF TURN (mm)	WINDING AREA (mm^2)	WINDING WIDTH (mm)	AREA PRODUCT Ae x Aw (mm^4)	TYPE NUMBER
1	8	all	35	20	6.6	882	CSVS-RM7-1S-8P-Z

MOUNTING PARTS

General data

ITEM	SPECIFICATION
Clamping force	≈20 N
Clip material	stainless steel (CrNi)
Type number	CLI-RM7

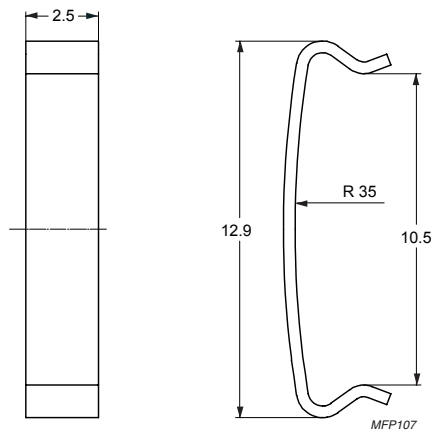

Dimensions in mm.

Fig.5 Mounting clip for RM7/I.

CORE SETS

Effective core parameters

SYMBOL	PARAMETER	VALUE	UNIT
Σ(l/A)	core factor (C1)	0.520	mm^{-1}
V_e	effective volume	1 060	mm^3
l_e	effective length	23.5	mm
A_e	effective area	45.3	mm^2
A_{min}	minimum area	39.6	mm^2
m	mass of set	≈ 6.0	g

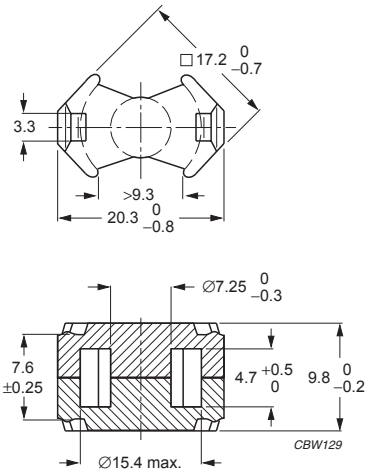

Dimensions in mm.

Fig.1 RM7/ILP core set.

Core sets for general purpose transformers and power applications

Clamping force for A_L measurements 40 ±20 N.

GRADE	A_L (nH)	μ_e	AIR GAP (μm)	TYPE NUMBER
3C90 sup	3650 ±25%	≈ 1510	≈ 0	RM7/ILP-3C90
3F3 sup	3100 ±25%	≈ 1280	≈ 0	RM7/ILP-3F3
3F4 sup	1800 ±25%	≈ 740	≈ 0	RM7/ILP-3F4

Properties of core sets under power conditions

GRADE	B (mT) at	CORE LOSS (W) at				
	H = 250 A/m; f = 25 kHz; T = 100 °C	f = 25 kHz; $\hat{B}$ = 200 mT; T = 100 °C	f = 100 kHz; $\hat{B}$ = 100 mT; T = 100 °C	f = 400 kHz; $\hat{B}$ = 50 mT; T = 100 °C	f = 1 MHz; $\hat{B}$ = 30 mT; T = 100 °C	f = 3 MHz; $\hat{B}$ = 10 mT; T = 100 °C
3C90	≥320	≤ 0.13	≤ 0.14	–	–	–
3F3	≥300	–	≤ 0.12	≤ 0.20	–	–
3F4	≥250	–	–	–	≤ 0.32	≤ 0.5

MOUNTING PARTS

General data

ITEM	SPECIFICATION
Clamping force	≈20 N
Clip material	stainless steel (CrNi)
Type number	CLI-RM7/ILP

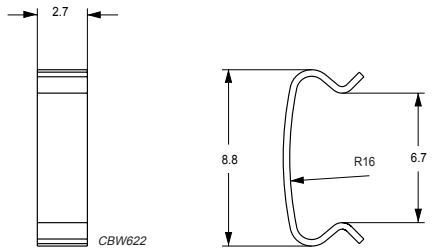

Dimensions in mm.

Fig.2 Mounting clip for RM7/ILP.

CORE SETS

Effective core parameters

SYMBOL	PARAMETER	VALUE	UNIT
Σ(l/A)	core factor (C1)	0.683	mm^{-1}
V_e	effective volume	1850	mm^3
l_e	effective length	35.5	mm
A_e	effective area	52.0	mm^2
A_{min}	minimum area	39.5	mm^2
m	mass of set	≈ 11	g

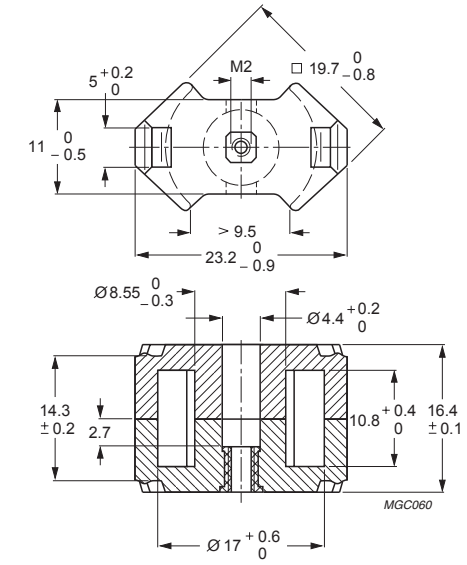

Dimensions in mm.

Fig.1 RM8 core set.

Core sets for filter applications

Clamping force for A_L measurements, 60 ±30 N.

GRADE	A_L (nH)	μ_e	TOTAL AIR GAP (μm)	TYPE NUMBER (WITH NUT)	TYPE NUMBER (WITHOUT NUT)
3D3 sup	100 ±3%	≈ 54	≈ 840	RM8-3D3-E100/N	RM8-3D3-E100
	160 ±3%	≈ 87	≈ 450	RM8-3D3-E160/N	RM8-3D3-E160
	1240 ±25%	≈ 675	≈ 0	–	RM8-3D3
3H3 sup	250 ±3%	≈ 136	≈ 290	RM8-3H3-A250/N	RM8-3H3-A250
	315 ±3%	≈ 171	≈ 220	RM8-3H3-A315/N	RM8-3H3-A315
	400 ±3%	≈ 217	≈ 160	RM8-3H3-A400/N	RM8-3H3-A400
	630 ±5%	≈ 342	≈ 90	RM8-3H3-A630/N	RM8-3H3-A630
	2850 ±25%	≈ 1550	≈ 0	–	RM8-3H3

INDUCTANCE ADJUSTERS

General data

PARAMETER	SPECIFICATION
Material of head and thread	polypropylene (PP), glass fibre reinforced
Maximum operating temperature	125 °C

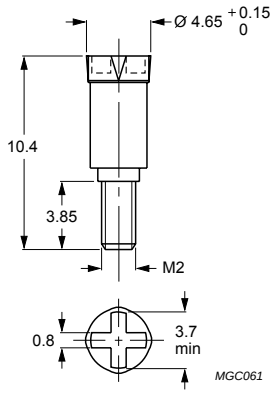

Dimensions in mm.

Fig.2 RM8 inductance adjuster.

Inductance adjuster selection chart sup (applies to all types)

GRADE	A_L (nH)	TYPES FOR LOW ADJUSTMENT	ΔL/L %(1)	TYPES FOR MEDIUM ADJUSTMENT	ΔL/L %(1)	TYPES FOR HIGH ADJUSTMENT	ΔL/L %(1)
3H3	63	–	–	–	–	ADJ-P22/RM8-RED	24
	100	–	–	ADJ-P22/RM8-RED	16	ADJ-P22/RM8-ORANGE	21
	160	–	–	ADJ-P22/RM8-ORANGE	14	ADJ-P22/RM8-WHITE	22
	250	ADJ-P22/RM8-RED	7	ADJ-P22/RM8-ORANGE	10	ADJ-P22/RM8-WHITE	18
	315	ADJ-P22/RM8-ORANGE	7	ADJ-P22/RM8-WHITE	13	ADJ-P22/RM8-BROWN	21
	400	ADJ-P22/RM8-ORANGE	5	ADJ-P22/RM8-WHITE	10	ADJ-P22/RM8-BROWN	15
	630	ADJ-P22/RM8-WHITE	6	ADJ-P22/RM8-BROWN	8	ADJ-P22/RM8-BLACK	13
3D3	63	–	–	–	–	ADJ-P22/RM8-RED	23
	100	–	–	ADJ-P22/RM8-RED	15	ADJ-P22/RM8-ORANGE	22
	160	–	–	ADJ-P22/RM8-ORANGE	14	ADJ-P22/RM8-WHITE	22

Note

1. Maximum adjustment range.

COIL FORMER

General data

PARAMETER	SPECIFICATION
Coil former material	unsaturated polyester (UP), glass-reinforced, flame retardant in accordance with UL 94V-0; UL file number E61040 (M)
Pin material	copper-tin alloy (CuSn), tin (Sn) plated
Maximum operating temperature	180 °C, *"IEC 60085"* , class H
Resistance to soldering heat	*"IEC 60068-2-20"*, Part 2, Test Tb, method 1B, 350 °C, 3.5 s
Solderability	*"IEC 60068-2-20"*, Part 2, Test Ta, method 1

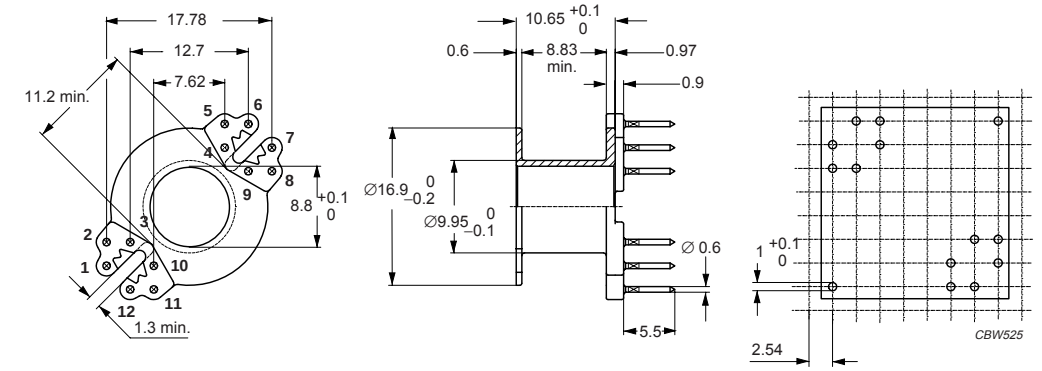

Dimensions in mm.

Fig.3 RM8 coil former.

Winding data and area product for RM8 coil former

NUMBER OF SECTIONS	NUMBER OF PINS	PIN POSITIONS USED	AVERAGE LENGTH OF TURN (mm)	WINDING AREA (mm^2)	WINDING WIDTH (mm)	AREA PRODUCT Ae x Aw (mm^4)	TYPE NUMBER
1	8	1, 2, 5, 6, 7, 8, 11, 12	42	30	9.1	1560	CSV-RM8-1S-8P-G(1)
1	12	all	42	30	9.1	1560	CSV-RM8-1S-12P-G(1)
2	8	1, 2, 5, 6, 7, 8, 11, 12	42	2 × 13.5	2 × 4.3	2 x 702	CSV-RM8-2S-8P
2	12	all	42	2 × 13.5	2 × 4.3	2 x 702	CSV-RM8-2S-12P-G
1	4	3, 4, 9, 10	42	30	9.1	1560	CSV-RM8-1S-4P
1	5	1, 2, 5, 8, 11	42	30	9.1	1560	CSV-RM8-1S-5P
2	5	1, 2, 5, 8, 11	42	2 × 13.5	2 × 4.3	2 x 702	CSV-RM8-2S-5P

Note 1. Also available with post-inserted pins.

MOUNTING PARTS

General data

ITEM	SPECIFICATION
Clamping force	≈30 N
Clip material	steel
Clip plating	silver (Ag)
Solderability	*"IEC 60068-2-20"*, Part 2, Test Ta, method 1
Type number	CLI/P-RM8

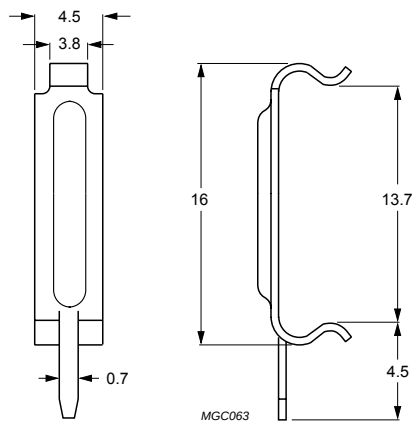

Dimensions in mm.

Fig.4 Mounting clip for RM8.

CORE SETS

Effective core parameters

SYMBOL	PARAMETER	VALUE	UNIT
Σ(l/A)	core factor (C1)	0.604	mm^{-1}
V_e	effective volume	2440	mm^3
l_e	effective length	38.4	mm
A_e	effective area	63.0	mm^2
A_{min}	minimum area	55.4	mm^2
m	mass of set	≈ 13	g

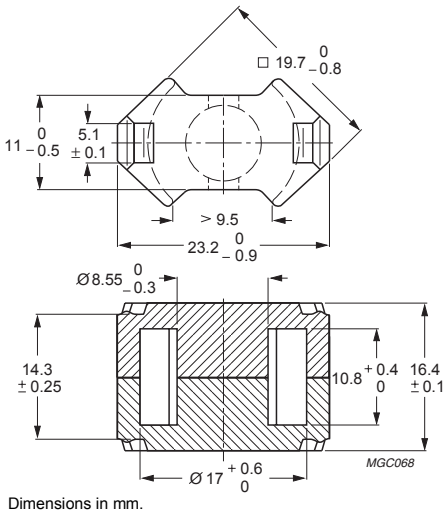

Dimensions in mm.

Fig.1 RM8/I core set.

Core sets for filter applications

Clamping force for A_L measurements, 30 ±10 N.

GRADE	A_L (nH)	μ_e	AIR GAP (μm)	TYPE NUMBER
3B46 des	5200 ± 25 %	≈ 2500	≈ 0	RM8/I-3B46
3D3	250 ±3%	≈ 121	≈ 360	RM8/I-3D3-A250
	315 ±5%	≈ 153	≈ 270	RM8/I-3D3-A315
	400 ±5%	≈ 194	≈ 200	RM8/I-3D3-A400
	1400 ±25%	≈ 675	≈ 0	RM8/I-3D3
3H3	400 ±3%	≈ 194	≈ 200	RM8/I-3H3-A400
	630 ±5%	≈ 306	≈ 115	RM8/I-3H3-A630
	1000 ±10%	≈ 485	≈ 65	RM8/I-3H3-A1000
	3250 ±25%	≈ 1560	≈ 0	RM8/I-3H3

Core sets for general purpose transformers and power applications

Clamping force for A_L measurements, 30 ±10 N.

GRADE	A_L (nH)	μ_e	TOTAL AIR GAP (μm)	TYPE NUMBER
3C81	100 ±3%	≈ 49	≈ 1100	RM8/I-3C81-E100
	160 ±3%	≈ 78	≈ 610	RM8/I-3C81-A160
	250 ±3%	≈ 121	≈ 360	RM8/I-3C81-A250
	315 ±3%	≈ 153	≈ 270	RM8/I-3C81-A315
	400 ±3%	≈ 194	≈ 200	RM8/I-3C81-A400
	4100 ±25%	≈ 1990	≈ 0	RM8/I-3C81
3C90	100 ±3%	≈ 49	≈ 1100	RM8/I-3C90-A100
	160 ±3%	≈ 78	≈ 610	RM8/I-3C90-A160
	250 ±3%	≈ 121	≈ 360	RM8/I-3C90-A250
	315 ±3%	≈ 153	≈ 270	RM8/I-3C90-A315
	400 ±3%	≈ 194	≈ 200	RM8/I-3C90-A400
	3300 ±25%	≈ 1600	≈ 0	RM8/I-3C90
3C91 des	4100 ±25%	≈ 1990	≈ 0	RM8/I-3C91
3C94	100 ±3%	≈ 49	≈ 1100	RM8/I-3C94-A100
	160 ±3%	≈ 78	≈ 610	RM8/I-3C94-A160
	250 ±3%	≈ 121	≈ 360	RM8/I-3C94-A250
	315 ±3%	≈ 153	≈ 270	RM8/I-3C94-A315
	400 ±3%	≈ 194	≈ 200	RM8/I-3C94-A400
	3300 ±25%	≈ 1600	≈ 0	RM8/I-3C94
3C95 des	4100 ±25%	≈ 1990	≈ 0	RM8/I-3C95
3C96 des	3000 ±25%	≈ 1440	≈ 0	RM8/I-3C96
3F3	100 ±3%	≈ 49	≈ 1100	RM8/I-3F3-A100
	160 ±3%	≈ 78	≈ 610	RM8/I-3F3-A160
	250 ±3%	≈ 121	≈ 360	RM8/I-3F3-A250
	315 ±3%	≈ 153	≈ 270	RM8/I-3F3-A315
	400 ±3%	≈ 194	≈ 200	RM8/I-3F3-A400
	3000 ±25%	≈ 1440	≈ 0	RM8/I-3F3
3F35 prot	2400 ±25%	≈ 1150	≈ 0	RM8/I-3F35
3F4 des	100 ±3%	≈ 49	≈ 1100	RM8/I-3F4-A100
	160 ±3%	≈ 78	≈ 610	RM8/I-3F4-A160
	250 ±3%	≈ 121	≈ 360	RM8/I-3F4-A250
	315 ±3%	≈ 153	≈ 270	RM8/I-3F4-A315
	400 ±3%	≈ 194	≈ 200	RM8/I-3F4-A400
	1700 ±25%	≈ 820	≈ 0	RM8/I-3F4
3F45 prot	1700 ±25%	≈ 820	≈ 0	RM8/I-3F45

Core sets of high permeability grades

Clamping force for A_L measurements, 30 ±10 N.

GRADE	A_L (nH)	μ_e	TYPE NUMBER
3E27	8000 ± 25%	≈ 3880	RM8/I-3E27
3E5	12500 +40/–30%	≈ 6060	RM8/I-3E5
3E6	15500 +40/–30%	≈ 7520	RM8/I-3E6

Properties of core sets under power conditions

GRADE	B (mT) at	CORE LOSS (W) at				
	H = 250 A/m; f = 25 kHz; T = 100 °C	f = 25 kHz; $\hat{B}$ = 200 mT; T = 100 °C	f = 100 kHz; $\hat{B}$ = 100 mT; T = 100 °C	f = 100 kHz; $\hat{B}$ = 200 mT; T = 25 °C	f = 100 kHz; $\hat{B}$ = 200 mT; T = 100 °C	f = 400 kHz; $\hat{B}$ = 50 mT; T = 100 °C
3C81	≥315	≤ 0.56	–	–	–	–
3C90	≥320	≤ 0.30	≤ 0.31	–	–	–
3C91	≥315	–	≤ 0.17(1)	–	≤ 1.0[1)]	–
3C94	≥320	–	≤ 0.23	–	≤ 1.2	–
3C95	≥320	–	–	≤ 1.44	≤ 1.37	–
3C96	≥340	–	≤ 0.17	–	≤ 1.0	≤ 0.43
3F3	≥315	–	≤ 0.27	–	–	≤ 0.47
3F35	≥315	–	–	–	–	≤ 0.25
3F4	≥250	–	–	–	–	–

Properties of core sets under power conditions (continued)

GRADE	B (mT) at	CORE LOSS (W) at				
	H = 250 A/m; f = 25 kHz; T = 100 °C	f = 500 kHz; $\hat{B}$ = 50 mT; T = 100 °C	f = 500 kHz; $\hat{B}$ = 100 mT; T = 100 °C	f = 1 MHz; $\hat{B}$ = 30 mT; T = 100 °C	f = 1 MHz; $\hat{B}$ = 50 mT; T = 100 °C	f = 3 MHz; $\hat{B}$ = 10 mT; T = 100 °C
3C96	≥340	≤ 0.9	–	–	–	–
3F3	≥315	–	–	–	–	–
3F35	≥315	≤ 0.37	≤ 2.6	–	–	–
3F4	≥250	–	–	≤ 0.74	–	≤ 1.2
3F45	≥250	–	–	≤ 0.56	≤ 2.1	≤ 1.0

Note

1. Measured at 60 °C.

COIL FORMER

General data

PARAMETER	SPECIFICATION
Coil former material	polybutyleneterephthalate (PBT), glass-reinforced, flame retardant in accordance with *"UL 94V-0"*; UL file number E45329(R)
Pin material	copper-tin alloy (CuSn), tin (Sn) plated
Maximum operating temperature	155 °C, *"IEC 60085"*, class F
Resistance to soldering heat	*"IEC 60068-2-20"*, Part 2, Test Tb, method 1B, 350 °C, 3.5 s
Solderability	*"IEC 60068-2-20"*, Part 2, Test Ta, method 1

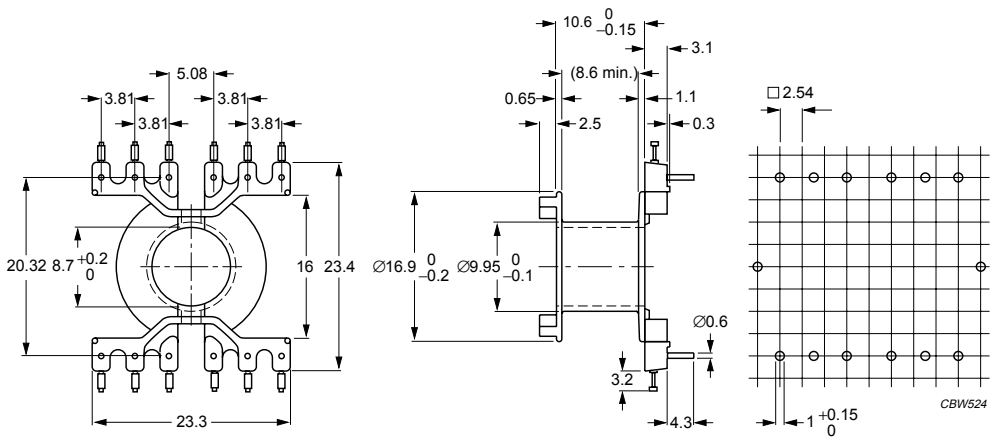

Dimensions in mm.

Fig.2 RM8/I coil former (DIL).

Winding data and area product for RM8/I coil former (DIL)

NUMBER OF SECTIONS	AVERAGE LENGTH OF TURN (mm)	WINDING AREA (mm^2)	WINDING WIDTH (mm)	AREA PRODUCT Ae x Aw (mm^4)	TYPE NUMBER
1	42	30.9	8.6	1950	CPV-RM8/I-1S-12PD

Additional coilformers are those of *"RM8"*, but *"area product"* is different.

Winding data and area product (for RM8/I) for RM8 coil former

NUMBER OF SECTIONS	NUMBER OF PINS	PIN POSITIONS USED	AVERAGE LENGTH OF TURN (mm)	WINDING AREA (mm^2)	WINDING WIDTH (mm)	AREA PRODUCT Ae x Aw (mm^4)	TYPE NUMBER
1	8	1, 2, 5, 6, 7, 8, 11, 12	42	30	9.1	1890	CSV-RM8-1S-8P-G(1)
1	12	all	42	30	9.1	1890	CSV-RM8-1S-12P-G(1)
2	8	1, 2, 5, 6, 7, 8, 11, 12	42	2×13.5	2×4.3	2 x 850	CSV-RM8-2S-8P
2	12	all	42	2×13.5	2×4.3	2 x 850	CSV-RM8-2S-12P-G
1	4	3, 4, 9, 10	42	30	9.1	1890	CSV-RM8-1S-4P
1	5	1, 2, 5, 8, 11	42	30	9.1	1890	CSV-RM8-1S-5P
2	5	1, 2, 5, 8, 11	42	2×13.5	2×4.3	2 x 850	CSV-RM8-2S-5P

Note 1. Also available with post-inserted pins.

MOUNTING PARTS

General data

ITEM	SPECIFICATION
Clamping force	≈15 N
Clip material	stainless steel
Clip plating	tin (Sn)
Solderability	*"IEC 60068-2-20"*, Part 2, Test Ta, method 1
Type number	CLI/P-RM8/I

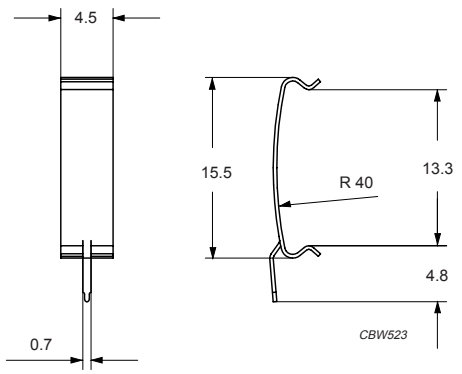

Dimensions in mm.

Fig.3 Mounting clip with earth pin for RM8/I.

General data

ITEM	SPECIFICATION
Clamping force	≈15 N
Clip material	stainless steel
Type number	CLI-RM8/I

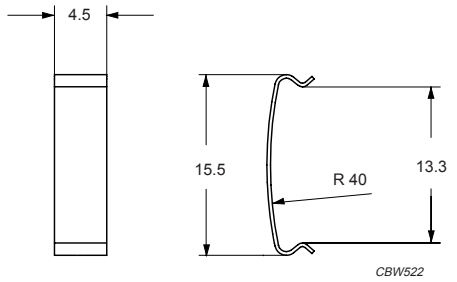

Dimensions in mm.

Fig.4 Mounting clip without earth pin for RM8/I.

CORE SETS

Effective core parameters

SYMBOL	PARAMETER	VALUE	UNIT
Σ(l/A)	core factor (C1)	0.440	mm^{-1}
V_e	effective volume	1860	mm^3
l_e	effective length	28.7	mm
A_e	effective area	64.9	mm^2
A_{min}	minimum area	55.4	mm^2
m	mass of set	≈ 10	g

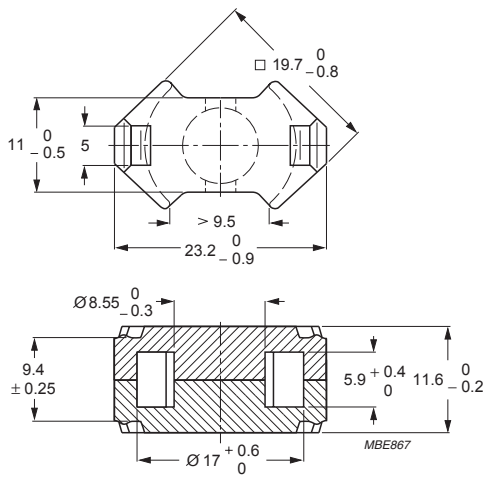

Dimensions in mm.

Fig.1 RM8/ILP core set.

Core sets for filter applications

Clamping force for A_L measurements, 30 ±10 N.

GRADE	A_L (nH)	μ_e	AIR GAP (μm)	TYPE NUMBER
3B46 des	6500 ±25%	≈ 2280	≈ 0	RM8/ILP-3B46
3D3	250 ±3%	≈ 88	≈ 330	RM8/ILP-3D3-A250
	315 ±3%	≈ 111	≈ 250	RM8/ILP-3D3-A315
	400 ±5%	≈ 141	≈ 180	RM8/ILP-3D3-A400
	1850 ±25%	≈ 650	≈ 0	RM8/ILP-3D3
3H3	400 ±3%	≈ 141	≈ 210	RM8/ILP-3H3-A400
	630 ±5%	≈ 222	≈ 120	RM8/ILP-3H3-A630
	1000 ±8%	≈ 352	≈ 70	RM8/ILP-3H3-A1000
	4100 ±25%	≈ 1440	≈ 0	RM8/ILP-3H3

Core sets for general purpose transformers and power applications

Clamping force for A_L measurements, 30 ±10 N.

GRADE	A_L (nH)	μ_e	AIR GAP (μm)	TYPE NUMBER
3C90	4100 ±25%	≈ 1440	≈ 0	RM8/ILP-3C90
3C94	4100 ±25%	≈ 1440	≈ 0	RM8/ILP-3C94
3C95 des	4800 ±25%	≈ 1690	≈ 0	RM8/ILP-3C95
3C96 des	3800 ±25%	≈ 1330	≈ 0	RM8/ILP-3C96
3F3	3800 ±25%	≈ 1330	≈ 0	RM8/ILP-3F3
3F35 prot	3100 ±25%	≈ 1090	≈ 0	RM8/ILP-3F35
3F4 des	2200 ±25%	≈ 770	≈ 0	RM8/ILP-3F4
3F45 prot	2200 ±25%	≈ 770	≈ 0	RM8/ILP-3F45

Core sets of high permeability grades

Clamping force for A_L measurements, 30 ±10 N.

GRADE	A_L (nH)	μ_e	AIR GAP (μm)	TYPE NUMBER
3E5 des	16000 +40/–30%	≈ 5600	≈ 0	RM8/ILP-3E5
3E6 des	19500 +40/–30%	≈ 6800	≈ 0	RM8/ILP-3E6

Properties of core sets under power conditions

GRADE	B (mT) at	CORE LOSS (W) at				
	H = 250 A/m; f = 25 kHz; T = 100 °C	f = 25 kHz; $\hat{B}$ = 200 mT; T = 100 °C	f = 100 kHz; $\hat{B}$ = 100 mT; T = 100 °C	f = 100 kHz; $\hat{B}$ = 200 mT; T = 25 °C	f = 100 kHz; $\hat{B}$ = 200 mT; T = 100 °C	f = 400 kHz; $\hat{B}$ = 50 mT; T = 100 °C
3C90	≥320	≤ 0.23	≤ 0.24	–	–	–
3C94	≥320	–	≤ 0.18	–	≤ 0.92	–
3C95	≥320	–	–	≤ 1.1	≤ 1.04	–
3C96	≥340	–	≤ 0.14	–	≤ 0.73	≤ 0.32
3F3	≥315	–	≤ 0.21	–	–	≤ 0.36
3F35	≥300	–	–	–	–	≤ 0.2
3F4	≥250	–	–	–	–	–

Properties of core sets under power conditions (continued)

GRADE	B (mT) at	CORE LOSS (W) at				
	H = 250 A/m; f = 25 kHz; T = 100 °C	f = 500 kHz; $\hat{B}$ = 50 mT; T = 100 °C	f = 500 kHz; $\hat{B}$ = 100 mT; T = 100 °C	f = 1 MHz; $\hat{B}$ = 30 mT; T = 100 °C	f = 1 MHz; $\hat{B}$ = 50 mT; T = 100 °C	f = 3 MHz; $\hat{B}$ = 10 mT; T = 100 °C
3C90	≥320	–	–	–	–	–
3C94	≥320	–	–	–	–	–
3C95	≥320	–	–	–	–	–
3C96	≥340	≤ 0.7	–	–	–	–
3F3	≥315	–	–	–	–	–
3F35	≥300	≤ 0.3	≤ 2.2	–	–	–
3F4	≥250	–	–	≤ 0.56	–	≤ 0.9
3F45	≥250	–	–	≤ 0.45	≤ 1.7	≤ 0.75

General data coil former

PARAMETER	SPECIFICATION
Coil former material	phenolformaldehyde (PF), glass-reinforced, flame retardant in accordance with *"UL 94V-0"*; UL file number E41429 (M)
Pin material	copper-clad steel, tin (Sn) plated
Maximum operating temperature	155 °C, *"IEC 60085"*, class F
Resistance to soldering heat	*"IEC 60068-2-20"*, Part 2, Test Tb, method 1B, 350 °C, 3.5 s
Solderability	*"IEC 60068-2-20"*, Part 2, Test Ta, method 1

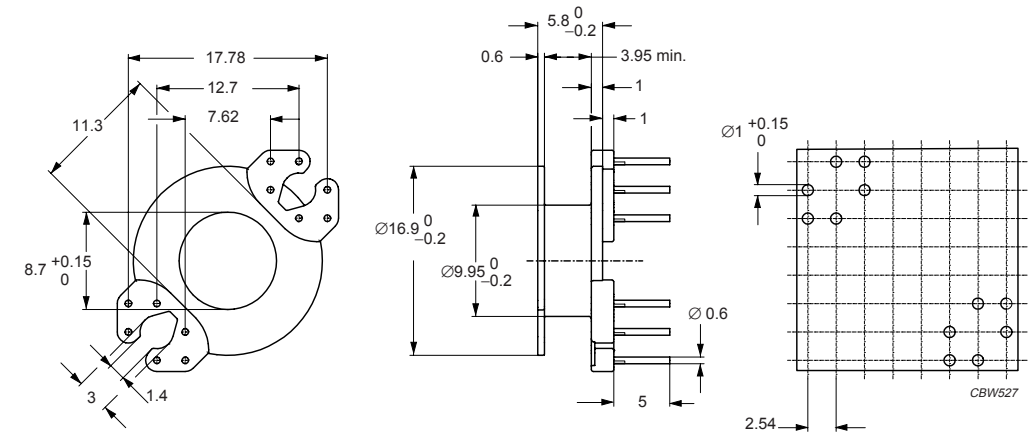

Dimensions in mm.

Fig.2 Coil former for RM8/ILP; 12 pins.

Winding data and area product for RM8/ILP coil former

NUMBER OF SECTIONS	NUMBER OF PINS	PIN POSITIONS USED	WINDING AREA (mm^2)	WINDING WIDTH (mm)	AVERAGE LENGTH OF TURN (mm)	AREA PRODUCT Ae x Aw (mm^4)	TYPE NUMBER
1	12	all	13.3	3.95	41.8	863	CSV-RM8/ILP-1S-12P-Z
1	10	1, 2, 3, 4, 6, 7, 9, 10, 11, 12	13.3	3.95	41.8	863	CSV-RM8/ILP-1S-10P-Z
1	10	1, 2, 3, 4, 6, 8, 9, 10, 11, 12	13.3	3.95	41.8	863	CSV-RM8/ILP-1S-10P-ZA

MOUNTING PARTS

General data

ITEM	SPECIFICATION
Clamping force	≈15 N
Clip material	stainless steel (CrNi)
Clip plating	tin (Sn)
Solderability	*"IEC 60068-2-20"*, Part 2, Test Ta, method 1
Type number	CLI/P-RM8/ILP

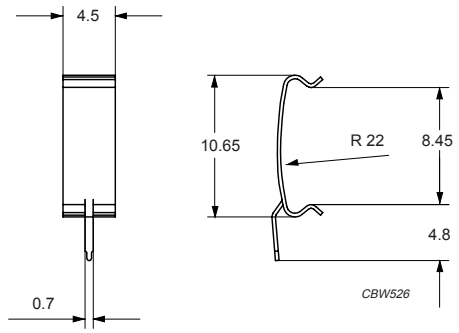

Dimensions in mm.

Fig.3 Mounting clip for RM8/ILP.

CORE SETS

Effective core parameters

SYMBOL	PARAMETER	VALUE	UNIT
Σ(l/A)	core factor (C1)	0.462	mm^{-1}
V_e	effective volume	4310	mm^3
l_e	effective length	44.6	mm
A_e	effective area	96.6	mm^2
A_{min}	minimum area	89.1	mm^2
m	mass of set	≈ 22	g

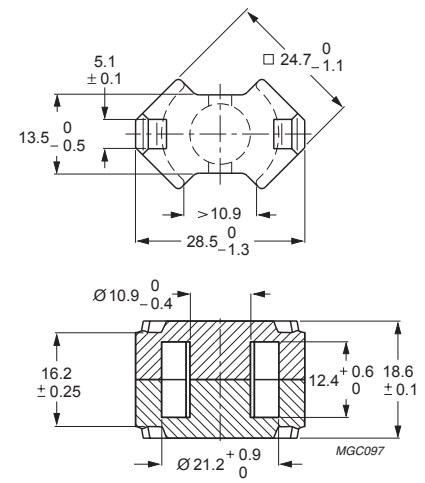

Dimensions in mm.

Fig.1 RM10/I core set.

Core sets for filter applications

Clamping force for A_L measurements, 60 ±20 N.

GRADE	A_L (nH)	μ_e	AIR GAP (μm)	TYPE NUMBER
3D3	315 ±3%	≈ 116	≈ 380	RM10/I-3D3-A315
	400 ±5%	≈ 147	≈ 280	RM10/I-3D3-A400
	630 ±8%	≈ 232	≈ 140	RM10/I-3D3-A630
	1900 ±25%	≈ 700	≈ 0	RM10/I-3D3
3H3	400 ±3%	≈ 147	≈ 330	RM10/I-3H3-A400
	630 ±3%	≈ 232	≈ 190	RM10/I-3H3-A630
	1000 ±10%	≈ 367	≈ 110	RM10/I-3H3-A1000
	4400 ±25%	≈ 1620	≈ 0	RM10/I-3H3

Core sets for general purpose transformers and power applications

Clamping force for A_L measurements, 60 ±20 N.

GRADE	A_L (nH)	μ_e	TOTAL AIR GAP (μm)	TYPE NUMBER
3C81	160 ±3%	≈ 59	≈ 980	RM10/I-3C81-E160
	250 ±3%	≈ 92	≈ 570	RM10/I-3C81-A250
	315 ±3%	≈ 116	≈ 430	RM10/I-3C81-A315
	400 ±3%	≈ 147	≈ 330	RM10/I-3C81-A400
	630 ±3%	≈ 232	≈ 190	RM10/I-3C81-A630
	5500 ±25%	≈ 2020	≈ 0	RM10/I-3C81

GRADE	A_L (nH)	μ_e	TOTAL AIR GAP (μm)	TYPE NUMBER
3C90	160 ±3%	≈ 59	≈ 980	RM10/I-3C90-A160
	250 ±3%	≈ 92	≈ 570	RM10/I-3C90-A250
	315 ±3%	≈ 116	≈ 430	RM10/I-3C90-A315
	400 ±3%	≈ 147	≈ 330	RM10/I-3C90-A400
	630 ±3%	≈ 232	≈ 190	RM10/I-3C90-A630
	4500 ±25%	≈ 1650	≈ 0	RM10/I-3C90
3C91 des	5500 ±25%	≈ 2020	≈ 0	RM10/I-3C91
3C94	160 ±3%	≈ 59	≈ 980	RM10/I-3C94-A160
	250 ±3%	≈ 92	≈ 570	RM10/I-3C94-A250
	315 ±3%	≈ 116	≈ 430	RM10/I-3C94-A315
	400 ±3%	≈ 147	≈ 330	RM10/I-3C94-A400
	630 ±3%	≈ 232	≈ 190	RM10/I-3C94-A630
	4500 ±25%	≈ 1650	≈ 0	RM10/I-3C94
3C95 des	5500 ±25%	≈ 2020	≈ 0	RM10/I-3C95
3C96 des	4050 ±25%	≈1680	≈ 0	RM10/I-3C96
3F3	160 ±3%	≈ 59	≈ 980	RM10/I-3F3-A160
	250 ±3%	≈ 92	≈ 570	RM10/I-3F3-A250
	315 ±3%	≈ 116	≈ 430	RM10/I-3F3-A315
	400 ±3%	≈ 147	≈ 330	RM10/I-3F3-A400
	630 ±3%	≈ 232	≈ 190	RM10/I-3F3-A630
	4050 ±25%	≈ 1490	≈ 0	RM10/I-3F3
3F35 prot	3100 ±25%	≈1190	≈ 0	RM10/I-3F35

Core sets of high permeability grades

Clamping force for AL measurements, 60 ±20 N.

GRADE	A_L (nH)	μ_e	TYPE NUMBER
3E27	10700 ± 25%	≈ 3930	RM10/I-3E27
3E5	16000 +40/–30%	≈ 5880	RM10/I-3E5

Properties of core sets under power conditions

GRADE	B (mT) at	CORE LOSS (W) at				
	H = 250 A/m; f = 25 kHz; T = 100 °C	f = 25 kHz; $\hat{B}$ = 200 mT; T = 100 °C	f = 100 kHz; $\hat{B}$ = 100 mT; T = 100 °C	f = 100 kHz; $\hat{B}$ = 200 mT; T = 25 °C	f = 100 kHz; $\hat{B}$ = 200 mT; T = 100 °C	f = 400 kHz; $\hat{B}$ = 50 mT; T = 100 °C
3C81	≥315	≤ 1.0	–	–	–	–
3C90	≥320	≤ 0.52	≤ 0.55	–	–	–
3C91	≥315	–	≤ 0.3[1]	–	≤ 1.8[1]	–
3C94	≥320	–	≤ 0.41	–	≤ 2.3	–
3C95	≥320	–	–	≤ 2.54	≤ 2.41	–
3C96	≥340	–	≤ 0.3	–	≤ 1.8	≤ 0.77
3F3	≥315	–	≤ 0.48	–	–	≤ 0.82
3F35	≥315	–	–	–	–	–

Properties of core sets under power conditions (continued)

GRADE	B (mT) at	CORE LOSS (W) at			
	H = 250 A/m; f = 25 kHz; T = 100 °C	f = 500 kHz; $\hat{B}$ = 50 mT; T = 100 °C	f = 500 kHz; $\hat{B}$ = 100 mT; T = 100 °C	f = 1 MHz; $\hat{B}$ = 30 mT; T = 100 °C	f = 3 MHz; $\hat{B}$ = 10 mT; T = 100 °C
3C96	≥340	≤ 1.5	–	–	–
3F3	≥315	–	–	–	–
3F35	≥315	≤ 0.6	≤ 4.5	–	–

Note

1. Measured at 60 °C.

COIL FORMER

General data

PARAMETER	SPECIFICATION
Coil former material	polybutyleneterephtalate (PBT), glass-reinforced, flame retardant in accordance with UL 94V-0; UL file number E45329(R)
Pin material	copper-tin alloy (CuSn), tin (Sn) plated
Maximum operating temperature	155 °C, *"IEC 60085"*, class F
Resistance to soldering heat	*"IEC 60068-2-20"*, Part 2, Test Tb, method 1B, 350 °C, 3.5 s
Solderability	*"IEC 60068-2-20"*, Part 2, Test Ta, method 1

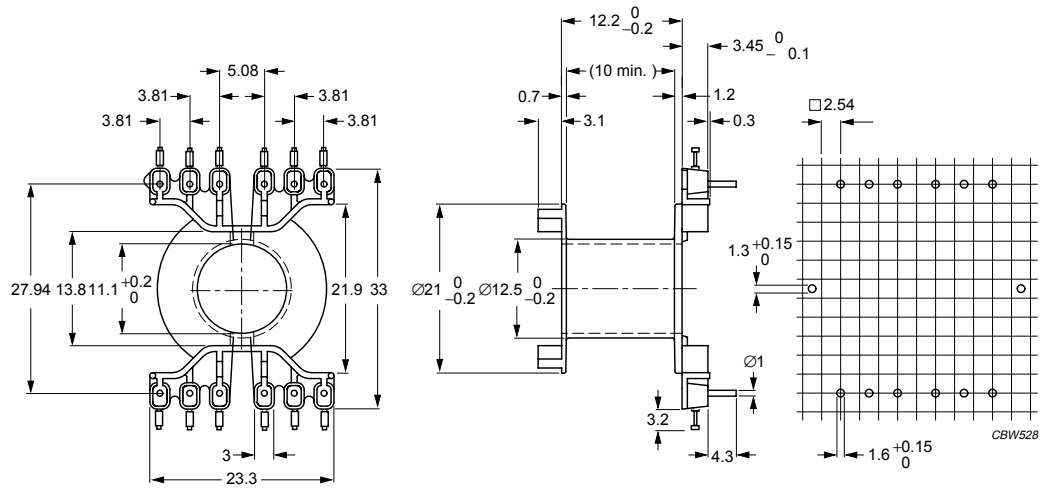

Dimensions in mm.

Fig.2 RM10/I coil former (DIL).

Winding data and area product for RM10 coil former (DIL)

NUMBER OF SECTIONS	AVERAGE LENGTH OF TURN (mm)	WINDING AREA (mm^2)	WINDING WIDTH (mm)	AREA PRODUCT Ae x Aw (mm^4)	TYPE NUMBER
1	52	44.2	10.0	4270	CPV-RM10-1S-12PD

COIL FORMER

General data

PARAMETER	SPECIFICATION
Coil former material	polyester (UP), glass-reinforced, flame retardant in accordance with *"UL 94V-0"*; UL file number E61040(M)
Pin material	copper-tin alloy (CuSn), tin (Sn) plated
Maximum operating temperature	180 °C, *"IEC 60085"*, class H
Resistance to soldering heat	*"IEC 60068-2-20"*, Part 2, Test Tb, method 1B, 350 °C, 3.5 s
Solderability	*"IEC 60068-2-20"*, Part 2, Test Ta, method 1

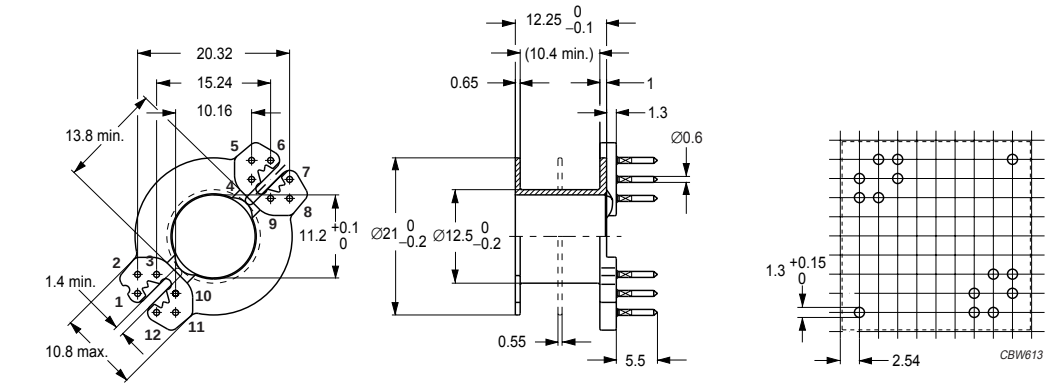

Dimensions in mm.

Fig.3 RM10/I coil former.

Winding data and area product for RM10/I coil former

NUMBER OF SECTIONS	NUMBER OF PINS	PIN POSITIONS USED	AVERAGE LENGTH OF TURN (mm)	WINDING AREA (mm^2)	WINDING WIDTH (mm)	AREA PRODUCT Ae x Aw (mm^4)	TYPE NUMBER
1	12	all	52.3	42.7	10.3	4120	CSV-RM10-1S-12P
1	5	3, 4, 6, 9, 10	52.3	42.7	10.3	4120	CSV-RM10-1S-5P
1	8	1,3,4,6,7,9, 10,12	52.3	42.7	10.3	4120	CSV-RM10-1S-8P
1	10	all exept 2, 11	52.3	42.7	10.3	4120	CSV-RM10-1S-10P
1	11	all exept 9	52.3	42.7	10.3	4120	CSV-RM10-1S-11P
2	8	1,3,4,6,7,9, 10,12	52.3	2 x 21.1	2 x 4.9	2 x 2040	CSV-RM10-2S-8P

NUMBER OF SECTIONS	NUMBER OF PINS	PIN POSITIONS USED	AVERAGE LENGTH OF TURN (mm)	WINDING AREA (mm^2)	WINDING WIDTH (mm)	AREA PRODUCT Ae x Aw (mm^4)	TYPE NUMBER
2	10	all exept 2, 11	52.3	2 x 21.1	2 x 4.9	2 x 2040	CSV-RM10-2S-10P
2	12	all	52.3	2 x 21.1	2 x 4.9	2 x 2040	CSV-RM10-2S-12P
2	5	3, 4, 6, 9, 10	52.3	2 x 21.1	2 x 4.9	2 x 2040	CSV-RM10-2S-5P

MOUNTING PARTS

General data

ITEM	SPECIFICATION
Clamping force	≈30 N
Clip material	stainless steel
Clip plating	tin (Sn)
Solderability	*"IEC 60068-2-20"*, Part 2, Test Ta, method 1
Type number	CLI/P-RM10/I

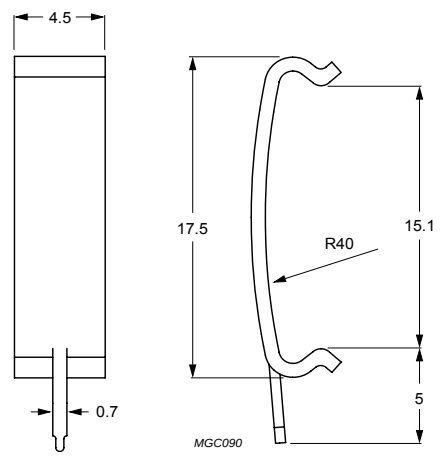

Dimensions in mm.

Fig.4 Mounting clip for RM10/I.

CORE SETS

Effective core parametersRM10/ILP

SYMBOL	PARAMETER	VALUE	UNIT
Σ(l/A)	core factor (C1)	0.340	mm^{-1}
V_e	effective volume	3360	mm^3
l_e	effective length	33.9	mm
A_e	effective area	99.1	mm^2
A_{min}	minimum area	89.1	mm^2
m	mass of set	≈ 17	g

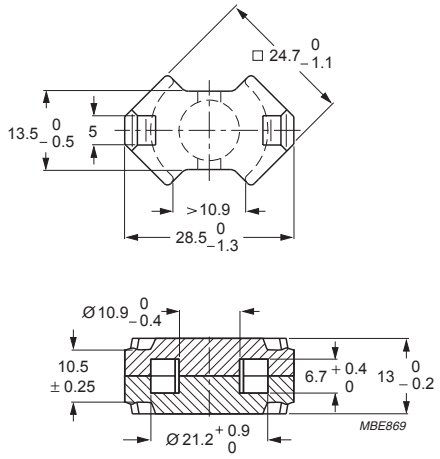

Dimensions in mm.

Fig.1 RM10/ILP core set.

Core sets for filter applications

Clamping force for A_L measurements, 60 ±20 N.

GRADE	A_L (nH)	μ_e	AIR GAP (μm)	TYPE NUMBER
3D3	315 ±3%	≈ 86	≈ 400	RM10/ILP-3D3-A315
	400 ±3%	≈ 109	≈ 300	RM10/ILP-3D3-A400
	630 ±5%	≈ 171	≈ 160	RM10/ILP-3D3-A630
	2500 ±25%	≈ 675	≈ 0	RM10/ILP-3D3
3H3	400 ±3%	≈ 109	≈ 330	RM10/ILP-3H3-A400
	630 ±3%	≈ 171	≈ 200	RM10/ILP-3H3-A630
	1000 ±5%	≈ 272	≈ 110	RM10/ILP-3H3-A1000
	5600 ±25%	≈ 1510	≈ 0	RM10/ILP-3H3

Core sets for general purpose transformers and power applications

Clamping force for A_L measurements, 60 ±20 N.

GRADE	A_L (nH)	μ_e	AIR GAP (μm)	TYPE NUMBER
3C90	5600 ±25%	≈ 1510	≈ 0	RM10/ILP-3C90
3C94	5600 ±25%	≈ 1510	≈ 0	RM10/ILP-3C94
3C95 des	6620 ±25%	≈ 1800	≈ 0	RM10/ILP-3C95
3C96 des	5200 ±25%	≈ 1400	≈ 0	RM10/ILP-3C96
3F3	5200 ±25%	≈ 1410	≈ 0	RM10/ILP-3F3
3F35 prot	4000 ±25%	≈ 1080	≈ 0	RM10/ILP-3F35
3F4 des	3000 ±25%	≈ 810	≈ 0	RM10/ILP-3F4

Core sets of high permeability grades

Clamping force for A_L measurements, 60 ±20 N.

GRADE	A_L (nH)	μ_e	AIR GAP (μm)	TYPE NUMBER
3E5 des	22000 +40/– 30%	≈ 5950	≈ 0	RM10/ILP-3E5
3E6 des	27000 +40/– 30%	≈ 7300	≈ 0	RM10/ILP-3E6

Properties of core sets under power conditions

GRADE	B (mT) at	CORE LOSS (W) at				
	H = 250 A/m; f = 25 kHz; T = 100 °C	f = 25 kHz; $\hat{B}$ = 200 mT; T = 100 °C	f = 100 kHz; $\hat{B}$ = 100 mT; T = 100 °C	f = 100 kHz; $\hat{B}$ = 200 mT; T = 25 °C	f = 100 kHz; $\hat{B}$ = 200 mT; T = 100 °C	f = 400 kHz; $\hat{B}$ = 50 mT; T = 100 °C
3C90	≥320	≤ 0.41	≤ 0.43	–	–	–
3C94	≥320	–	≤ 0.32	–	≤ 1.7	–
3C95	≥320	–	–	≤ 1.98	≤ 1.88	–
3C96	≥340	–	≤ 0.24	–	≤ 1.4	≤ 0.6
3F3	≥300	–	≤ 0.37	–	–	≤ 0.64
3F35	≥300	–	–	–	–	–
3F4	≥250	–	–	–	–	–

Properties of core sets under power conditions (continued)

GRADE	B (mT) at	CORE LOSS (W) at			
	H = 250 A/m; f = 25 kHz; T = 100 °C	f = 500 kHz; $\hat{B}$ = 50 mT; T = 100 °C	f = 500 kHz; $\hat{B}$ = 100 mT; T = 100 °C	f = 1 MHz; $\hat{B}$ = 30 mT; T = 100 °C	f = 3 MHz; $\hat{B}$ = 10 mT; T = 100 °C
3C90	≥320	–	–	–	–
3C94	≥320	–	–	–	–
3C95	≥320	–	–	–	–
3C96	≥340	≤ 1.2	–	–	–
3F3	≥300	–	–	–	–
3F35	≥300	≤ 0.45	≤ 3.5	–	–
3F4	≥250	–	–	≤ 1.0	≤ 1.6

COIL FORMER

General data

PARAMETER	SPECIFICATION
Coil former material	polybutyleneterephtalate (PBT), glass-reinforced, flame retardant in accordance with UL 94V-0; UL file number E45329(R)
Pin material	copper-tin alloy (CuSn), tin (Sn) plated
Maximum operating temperature	155 °C, *"IEC 60085"*, class F
Resistance to soldering heat	*"IEC 60068-2-20"*, Part 2, Test Tb, method 1B, 350 °C, 3.5 s
Solderability	*"IEC 60068-2-20"*, Part 2, Test Ta, method 1

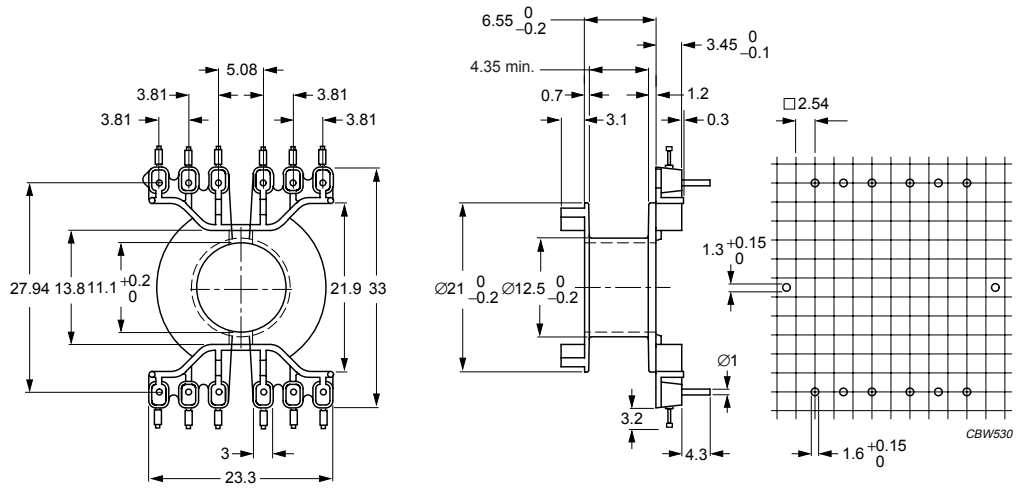

Dimensions in mm.

Fig.2 RM10/ILP coil former (DIL).

Winding data and area product for RM10/I coil former (DIL)

NUMBER OF SECTIONS	AVERAGE LENGTH OF TURN (mm)	WINDING AREA (mm^2)	WINDING WIDTH (mm)	AREA PRODUCT Ae x Aw (mm^4)	TYPE NUMBER
1	52	21.0	4.35	2080	CPV-RM10/ILP-1S-12PD

MOUNTING PARTS

General data mounting clip with earth pin

ITEM	SPECIFICATION
Clamping force	≈30 N
Clip material	stainless steel (CrNi)
Clip plating	tin (Sn)
Solderability	*"IEC 60068-2-20"*, Part 2, Test Ta, method 1
Type number	CLI/P-RM10/ILP

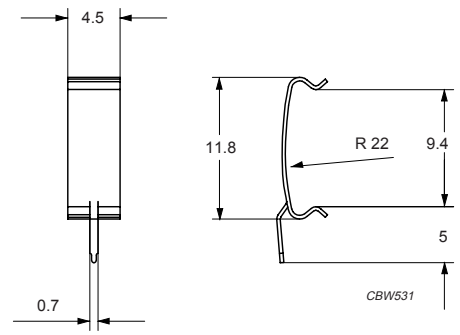

Dimensions in mm.

Fig.3 Mounting clip for RM10/ILP.

CORE SETS

Effective core parameters

SYMBOL	PARAMETER	VALUE	UNIT
Σ(l/A)	core factor (C1)	0.388	mm^{-1}
V_e	effective volume	8340	mm^3
l_e	effective length	56.6	mm
A_e	effective area	146	mm^2
A_{min}	minimum area	125	mm^2
m	mass of set	≈ 46	g

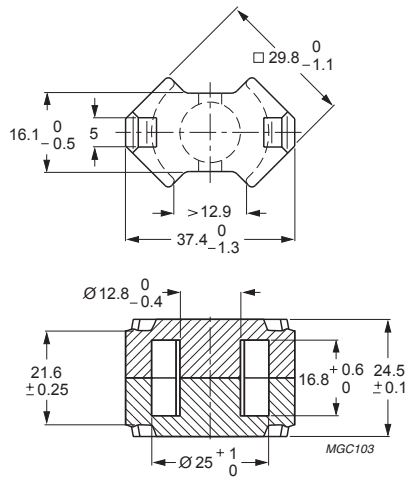

Dimensions in mm.

Fig.1 RM12/I core set.

Core sets for general purpose transformers and power applications

Clamping force for A_L measurements, 70 ±20 N.

GRADE	A_L (nH)	μ_e	AIR GAP (μm)	TYPE NUMBER
3C90	160 ±3%	≈ 49	≈ 1570	RM12/I-3C90-A160
	250 ±3%	≈ 77	≈ 900	RM12/I-3C90-A250
	315 ±5%	≈ 97	≈ 680	RM12/I-3C90-A315
	400 ±5%	≈ 123	≈ 510	RM12/I-3C90-A400
	630 ±5%	≈ 194	≈ 300	RM12/I-3C90-A630
	5600 ±25%	≈ 1730	≈ 0	RM12/I-3C90
3C94	160 ±3%	≈ 49	≈ 1570	RM12/I-3C94-A160
	250 ±3%	≈ 77	≈ 900	RM12/I-3C94-A250
	315 ±5%	≈ 97	≈ 680	RM12/I-3C94-A315
	400 ±5%	≈ 123	≈ 510	RM12/I-3C94-A400
	630 ±5%	≈ 194	≈ 300	RM12/I-3C94-A630
	5600 ±25%	≈ 1730	≈ 0	RM12/I-3C94
3C95 des	6790 ±25%	≈ 2095	≈ 0	RM12/I-3C95
3C96 des	5050 ±25%	≈ 1560	≈ 0	RM12/I-3C96

GRADE	A_L (nH)	μ_e	AIR GAP (μm)	TYPE NUMBER
3F3	160 ±3%	≈ 49	≈ 1570	RM12/I-3F3-A160
	250 ±3%	≈ 77	≈ 900	RM12/I-3F3-A250
	315 ±5%	≈ 97	≈ 680	RM12/I-3F3-A315
	400 ±5%	≈ 123	≈ 510	RM12/I-3F3-A400
	630 ±5%	≈ 194	≈ 300	RM12/I-3F3-A630
	5050 ±25%	≈ 1560	≈ 0	RM12/I-3F3

Properties of core sets under power conditions

GRADE	B (mT) at	CORE LOSS (W) at					
	H = 250 A/m; f = 25 kHz; T = 100 °C	f = 25 kHz; $\hat{B}$ = 200 mT; T = 100 °C	f = 100 kHz; $\hat{B}$ = 100 mT; T = 100 °C	f = 100 kHz; $\hat{B}$ = 200 mT; T = 25 °C	f = 100 kHz; $\hat{B}$ = 200 mT; T = 100 °C	f = 400 kHz; $\hat{B}$ = 50 mT; T = 100 °C	f = 500 kHz; $\hat{B}$ = 50 mT; T = 100 °C
3C90	≥315	≤ 1.0	≤ 1.1	–	–	–	–
3C94	≥315	–	≤ 0.8	–	≤ 4.5	–	–
3C95	≥315	–	–	≤ 4.92	≤ 4.67	–	–
3C96	≥340	–	≤ 0.6	–	≤ 3.6	≤ 1.5	≤ 3.0
3F3	≥315	–	≤0.92	–	–	≤1.6	–

COIL FORMER

General data

PARAMETER	SPECIFICATION
Coil former material	polybutyleneterephtalate (PBT), glass-reinforced, flame retardant in accordance with UL 94V-0; UL file number E45329(R)
Pin material	copper-tin alloy (CuSn), tin (Sn) plated
Maximum operating temperature	155 °C, *"IEC 60085"*, class F
Resistance to soldering heat	*"IEC 60068-2-20"*, Part 2, Test Tb, method 1B, 350 °C, 3.5 s
Solderability	*"IEC 60068-2-20"*, Part 2, Test Ta, method 1

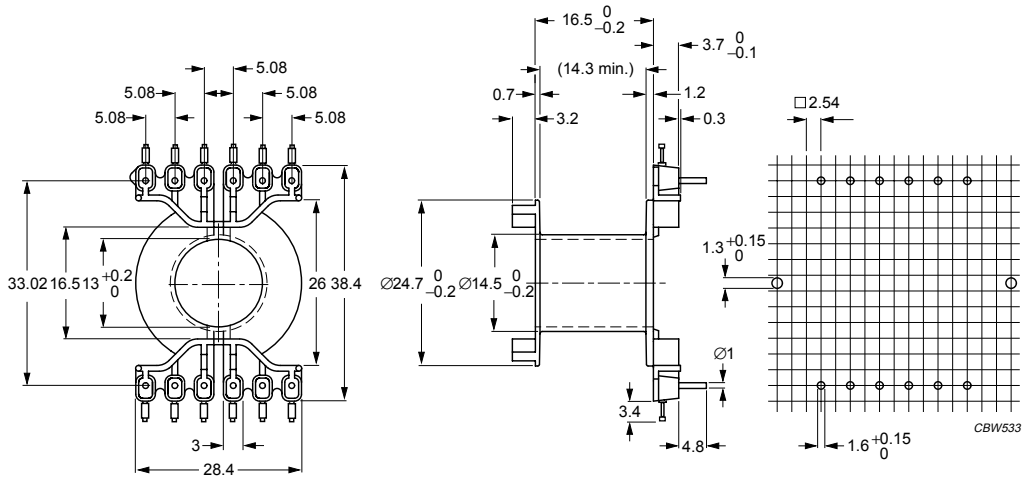

Dimensions in mm.

Fig.2 RM12/I coil former (DIL).

Winding data and area product for RM12/I coil former (DIL)

NUMBER OF SECTIONS	AVERAGE LENGTH OF TURN (mm)	WINDING AREA (mm^2)	WINDING WIDTH (mm)	AREA PRODUCT Ae x Aw (mm^4)	TYPE NUMBER
1	61	75.0	14.3	10950	CPV-RM12/I-1S-12PD

COIL FORMERS

General data

PARAMETER	SPECIFICATION
Coil former material	phenolformaldehyde (PF), glass reinforced, flame retardant in accordance with *"UL 94V-0"*; UL file number E167521(M)
Pin material	copper-tin alloy (CuSn), tin (Sn) plated
Maximum operating temperature	180 °C, *"IEC 60085"*, class H
Resistance to soldering heat	*"IEC 60068-2-20"*, Part 2, Test Tb, method 1B, 350 °C, 3.5 s
Solderability	*"IEC 60068-2-20"*, Part 2, Test Ta, method 1: 235 °C, 2 s

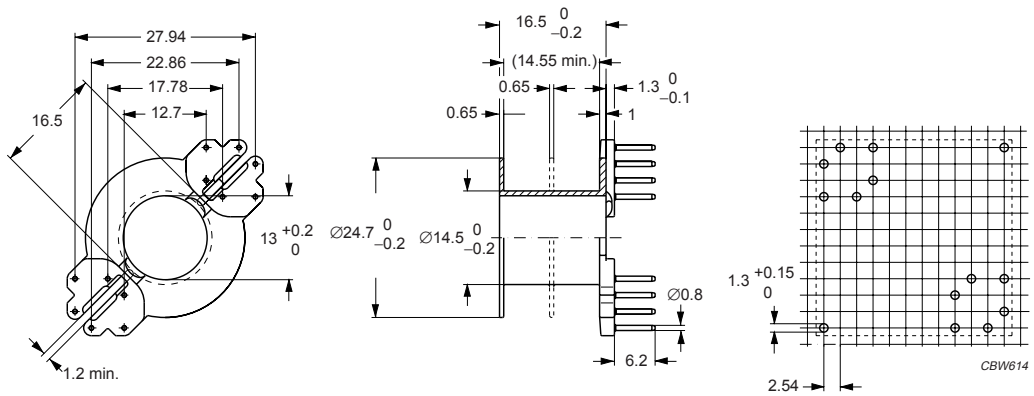

Dimensions in mm.

Fig.3 RM12/I coil former; 12-pins.

Winding data and area product for RM12/I coil former with 12-pins

NUMBER OF SECTIONS	WINDING AREA (mm^2)	MINIMUM WINDING WIDTH (mm)	AVERAGE LENGTH OF TURN (mm)	AREA PRODUCT Ae x Aw (mm^4)	TYPE NUMBER
1	72.0	14.4	61	10500	CSV-RM12-1S-12P

MOUNTING PARTS

General data

ITEM	SPECIFICATION
Clamping force	≈ 35 N
Clip material	stainless steel
Clip plating	tin (Sn)
Solderability	*"IEC 60068-2-20"*, Part 2, Test Ta, method 1
Type number	CLI/P-RM12/I

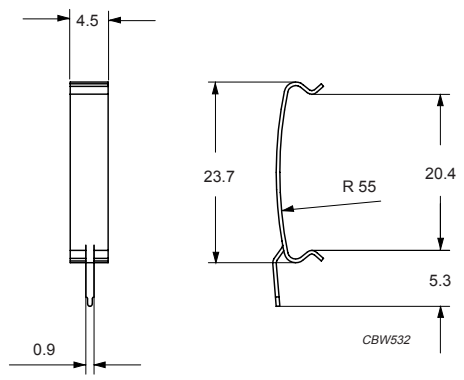

Dimensions in mm.

Fig.4 Mounting clip for RM12/I.

CORE SETS

Effective core parameters

SYMBOL	PARAMETER	VALUE	UNIT
$\Sigma(l/A)$	core factor (C1)	0.280	mm^{-1}
V_e	effective volume	6200	mm^3
l_e	effective length	42	mm
A_e	effective area	148	mm^2
A_{min}	minimum area	125	mm^2
m	mass of set	≈ 35	g

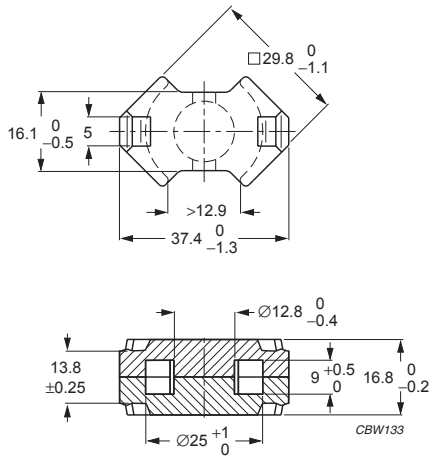

Dimensions in mm.

Fig.1 RM12/ILP core set.

Core sets for general purpose transformers and power applications

Clamping force for A_L measurements, 70 ±20 N.

GRADE	A_L (nH)	μ_e	AIR GAP (μm)	TYPE NUMBER
3C90	7100 ±25%	≈1600	≈ 0	RM12/ILP-3C90
3C94	7100 ±25%	≈1600	≈ 0	RM12/ILP-3C94
3C95 des	8470 ±25%	≈1915	≈ 0	RM12/ILP-3C95
3C96 des	6700 ±25%	≈1510	≈ 0	RM12/ILP-3C96
3F3	6700 ±25%	≈1510	≈ 0	RM12/ILP-3F3
3F35 prot	5000 ±25%	≈ 1110	≈ 0	RM12/ILP-3F35
3F4 des	3600 ±25%	≈ 810	≈ 0	RM12/ILP-3F4

Properties of core sets under power conditions

GRADE	B (mT) at	CORE LOSS (W) at				
	H = 250 A/m; f = 25 kHz; T = 100 °C	f = 25 kHz; $\hat{B}$ = 200 mT; T = 100 °C	f = 100 kHz; $\hat{B}$ = 100 mT; T = 100 °C	f = 100 kHz; $\hat{B}$ = 200 mT; T = 25 °C	f = 100 kHz; $\hat{B}$ = 200 mT; T = 100 °C	f = 400 kHz; $\hat{B}$ = 50 mT; T = 100 °C
3C90	≥315	≤ 0.75	≤ 0.79	–	–	–
3C94	≥315	–	≤ 0.62	–	≤ 3.3	–
3C95	≥315	–	–	≤ 3.66	≤ 3.47	–
3C96	≥315	–	≤ 0.49	–	≤ 2.6	≤ 1.1
3F3	≥300	–	≤ 0.68	–	–	≤ 1.2
3F35	≥300	–	–	–	–	–
3F4	≥250	–	–	–	–	–

Properties of core sets under power conditions (continued)

GRADE	B (mT) at	CORE LOSS (W) at			
	H = 250 A/m; f = 25 kHz; T = 100 °C	f = 500 kHz; $\hat{B}$ = 50 mT; T = 100 °C	f = 500 kHz; $\hat{B}$ = 100 mT; T = 100 °C	f = 1 MHz; $\hat{B}$ = 30 mT; T = 100 °C	f = 3 MHz; $\hat{B}$ = 10 mT; T = 100 °C
3C90	≥315	–	–	–	–
3C94	≥315	–	–	–	–
3C95	≥315	–	–	–	–
3C96	≥315	≤ 2.2	–	–	–
3F3	≥300	–	–	–	–
3F35	≥300	≤ 0.85	≤ 6.5	–	–
3F4	≥250	–	–	≤ 1.8	≤ 3.0

CORE SETS

Effective core parameters

SYMBOL	PARAMETER	VALUE	UNIT
$\Sigma(l/A)$	core factor (C1)	0.353	mm^{-1}
V_e	effective volume	13900	mm^3
l_e	effective length	70.0	mm
A_e	effective area	198	mm^2
A_{min}	minimum area	168	mm^2
m	mass of set	≈ 69	g

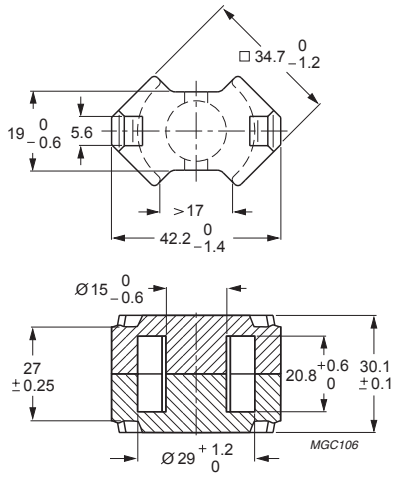

Dimensions in mm.

Fig.1 RM14/I core set.

Core sets for general purpose transformers and power applications

Clamping force for A_L measurements, 80 ±20 N.

GRADE	A_L (nH)	μ_e	AIR GAP (μm)	TYPE NUMBER
3C90	250 ±3%	≈ 70	≈ 1270	RM14/I-3C90-A250
	315 ±3%	≈ 89	≈ 950	RM14/I-3C90-A315
	400 ±3%	≈ 113	≈ 710	RM14/I-3C90-A400
	630 ±5%	≈ 177	≈ 410	RM14/I-3C90-A630
	1000 ±5%	≈ 281	≈ 240	RM14/I-3C90-A1000
	6600 ±25%	≈ 1850	≈ 0	RM14/I-3C90
3C94	250 ±3%	≈ 70	≈ 1270	RM14/I-3C94-A250
	315 ±3%	≈ 89	≈ 950	RM14/I-3C94-A315
	400 ±3%	≈ 113	≈ 710	RM14/I-3C94-A400
	630 ±5%	≈ 177	≈ 410	RM14/I-3C94-A630
	1000 ±5%	≈ 281	≈ 240	RM14/I-3C94-A1000
	6600 ±25%	≈ 1850	≈ 0	RM14/I-3C94
3C95 des	8130 ±25%	≈ 2290	≈ 0	RM14/I-3C95
3C96 des	5700 ±25%	≈ 1600	≈ 0	RM14/I-3C96
3F3	250 ±3%	≈ 70	≈ 1270	RM14/I-3F3-A250
	315 ±3%	≈ 89	≈ 950	RM14/I-3F3-A315
	400 ±3%	≈ 113	≈ 710	RM14/I-3F3-A400
	630 ±5%	≈ 177	≈ 410	RM14/I-3F3-A630
	1000 ±5%	≈ 281	≈ 240	RM14/I-3F3-A1000
	5700 ±25%	≈ 1600	≈ 0	RM14/I-3F3

Properties of core sets under power conditions

GRADE	B (mT) at	CORE LOSS (W) at					
	H = 250 A/m; f = 25 kHz; T = 100 °C	f = 25 kHz; $\hat{B}$ = 200 mT; T = 100 °C	f = 100 kHz; $\hat{B}$ = 100 mT; T = 100 °C	f = 100 kHz; $\hat{B}$ = 200 mT; T = 25 °C	f = 100 kHz; $\hat{B}$ = 200 mT; T = 100 °C	f = 400 kHz; $\hat{B}$ = 50 mT; T = 100 °C	f = 500 kHz; $\hat{B}$ = 50 mT; T = 100 °C
3C90	≥315	≤ 1.67	≤ 1.76	–	–	–	–
3C94	≥315	–	≤ 1.4	–	≤ 7.4	–	–
3C95	≥315	–	–	≤ 8.76	≤ 8.34	–	–
3C96	≥340	–	≤ 1.1	–	≤ 5.6	≤ 2.6	≤ 5.2
3F3	≥315	–	≤ 1.55	–	–	≤ 2.65	–

COIL FORMERS

General data

PARAMETER	SPECIFICATION
Coil former material	phenolformaldehyde (PF), glass reinforced, flame retardant in accordance with *"UL 94V-0"*; UL file number E167521(M)
Pin material	copper-tin alloy (CuSn), tin (Sn) plated
Maximum operating temperature	180 °C, *"IEC 60085"*, class H
Resistance to soldering heat	*"IEC 60068-2-20"*, Part 2, Test Tb, method 1B, 350 °C, 3.5 s
Solderability	*"IEC 60068-2-20"*, Part 2, Test Ta, method 1

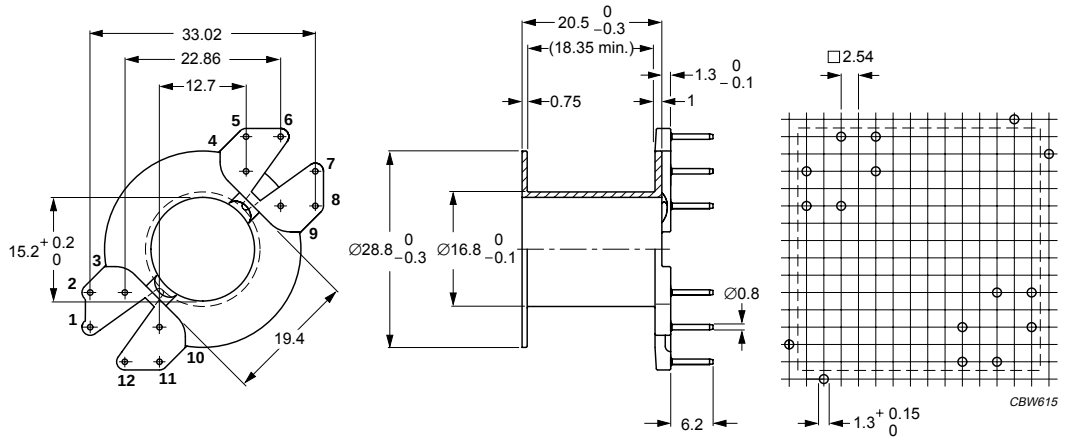

Dimensions in mm.

Fig.2 RM14/I coil former; 12-pins.

Winding data and area product for 12-pins RM14/I coil former

NUMBER OF SECTIONS	NUMBER OF PINS	PIN POSITIONS USED	AVERAGE LENGTH OF TURN (mm)	WINDING AREA (mm^2)	WINDING WIDTH (mm)	AREA PRODUCT Ae x Aw (mm^4)	TYPE NUMBER
1	10	1, 2, 3, 4, 6, 7, 9, 10, 11, 12	71	112	18.4	22200	CSV-RM14-1S-10P
1	12	all	71	112	18.4	22200	CSV-RM14-1S-12P

General data

PARAMETER	SPECIFICATION
Coil former material	polybutyleneterephtalate (PBT), glass-reinforced, flame retardent in accordance with *"UL 94V-0"*; UL file number E45329(R)
Pin material	copper-tin alloy (CuSn), tin (Sn) plated
Maximum operating temperature	155 °C, *"IEC 60085"*, class F
Resistance to soldering heat	*"IEC 60068-2-20"*, Part 2, Test Tb, method 1B, 350 °C, 3.5 s
Solderability	*"IEC 60068-2-20"*, Part 2, Test Ta, method 1

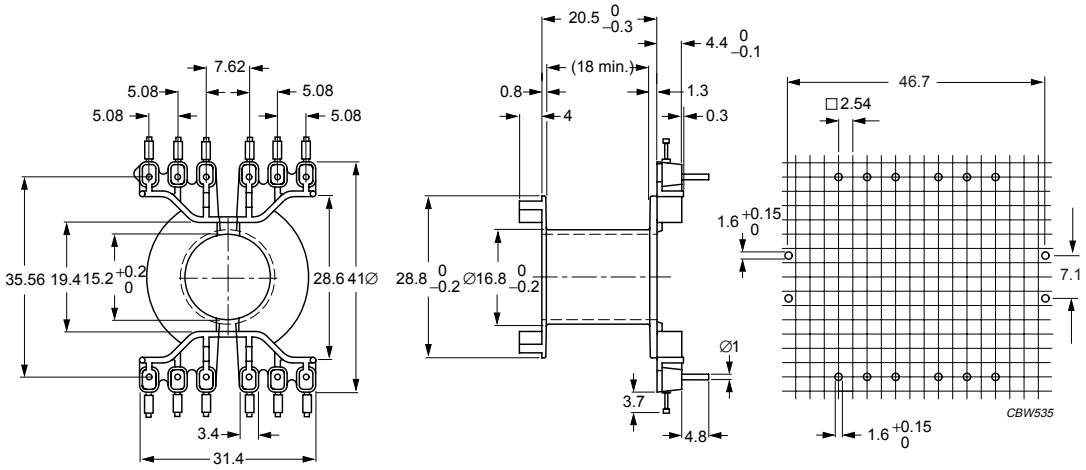

Dimensions in mm.

Fig.3 RM14/I coil former; 12-pins (DIL).

Winding data and area product for 12-pins RM14/I coil former (DIL)

NUMBER OF SECTIONS	AVERAGE LENGTH OF TURN (mm)	WINDING AREA (mm^2)	WINDING WIDTH (mm)	AREA PRODUCT Ae x Aw (mm^4)	TYPE NUMBER
1	71	111	18.0	22000	CPV-RM14/I-1S-12PD

MOUNTING PARTS

General data mounting clip with earth pin

ITEM	SPECIFICATION
Clamping force	≈40 N
Clip material	stainless steel
Clip plating	tin (Sn)
Solderability	*"IEC 60068-2-20"*, Part 2, Test Ta, method 1
Type number	CLI/P-RM14/I

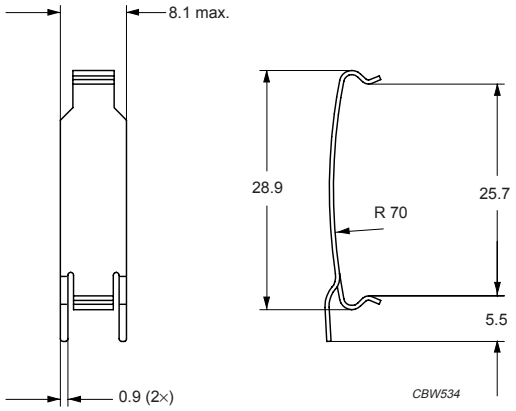

Dimensions in mm.

Fig.4 Mounting clip for RM14/I.

CORE SETS

Effective core parameters

SYMBOL	PARAMETER	VALUE	UNIT
$\Sigma(l/A)$	core factor (C1)	0.250	mm^{-1}
V_e	effective volume	10230	mm^3
l_e	effective length	50.9	mm
A_e	effective area	201	mm^2
A_{min}	minimum area	168	mm^2
m	mass of set	≈ 55	g

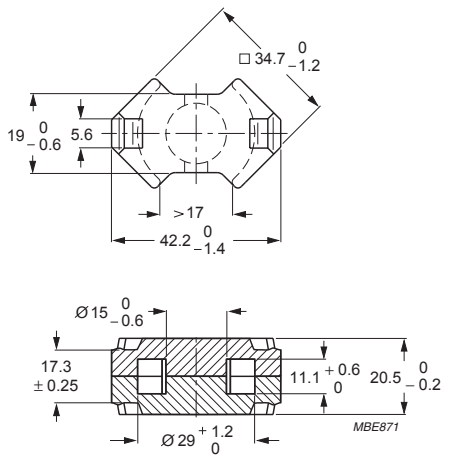

Dimensions in mm.

Fig.1 RM14/ILP core set.

Core sets for general purpose transformers and power applications

Clamping force for A_L measurements, 80 ±20 N.

GRADE	A_L (nH)	μ_e	AIR GAP (μm)	TYPE NUMBER
3C90	8400 ±25%	≈ 1690	≈ 0	RM14/ILP-3C90
3C94	8400 ±25%	≈ 1690	≈ 0	RM14/ILP-3C94
3C95 des	10140 ±25%	≈ 2040	≈ 0	RM14/ILP-3C95
3C96 des	7700 ±25%	≈ 1550	≈ 0	RM14/ILP-3C96
3F3	7700 ±25%	≈ 1550	≈ 0	RM14/ILP-3F3
3F35 prot	5800 ±25%	≈ 1150	≈ 0	RM14/ILP-3F35
3F4 des	4200 ±25%	≈ 850	≈ 0	RM14/ILP-3F4

Properties of core sets under power conditions

GRADE	B (mT) at	CORE LOSS (W) at				
	H = 250 A/m; f = 25 kHz; T = 100 °C	f = 25 kHz; $\hat{B}$ = 200 mT; T = 100 °C	f = 100 kHz; $\hat{B}$ = 100 mT; T = 100 °C	f = 100 kHz; $\hat{B}$ = 200 mT; T = 25 °C	f = 100 kHz; $\hat{B}$ = 200 mT; T = 100 °C	f = 400 kHz; $\hat{B}$ = 50 mT; T = 100 °C
3C90	≥315	≤ 1.3	≤ 1.4	–	–	–
3C94	≥315	–	≤ 1.1	–	≤ 5.5	–
3C95	≥315	–	–	≤ 6.44	≤ 6.14	–
3C96	≥340	–	≤ 0.82	–	≤ 4.4	≤ 1.9
3F3	≥300	–	≤ 1.2	–	–	≤ 2.0
3F35	≥300	–	–	–	–	–
3F4	≥250	–	–	–	–	–

Properties of core sets under power conditions (continued)

GRADE	B (mT) at	CORE LOSS (W) at			
	H = 250 A/m; f = 25 kHz; T = 100 °C	f = 500 kHz; $\hat{B}$ = 50 mT; T = 100 °C	f = 500 kHz; $\hat{B}$ = 100 mT; T = 100 °C	f = 1 MHz; $\hat{B}$ = 30 mT; T = 100 °C	f = 3 MHz; $\hat{B}$ = 10 mT; T = 100 °C
3C90	≥315	–	–	–	–
3C94	≥315	–	–	–	–
3C95	≥315	–	–	–	–
3C96	≥340	≤ 3.8	–	–	–
3F3	≥300	–	–	–	–
3F35	≥300	≤ 1.4	≤ 11	–	–
3F4	≥250	–	–	≤ 3.0	≤ 4.9

Soft Ferrites

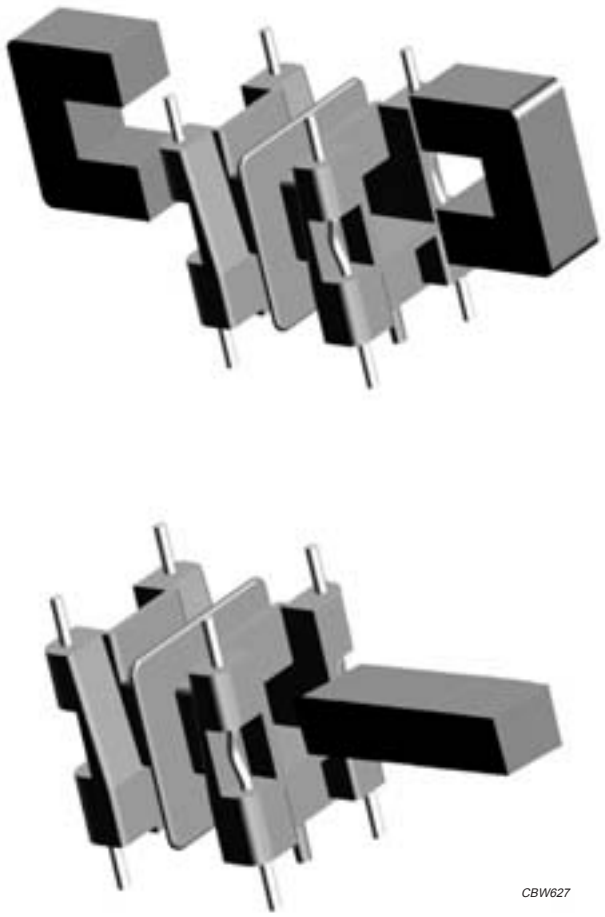
CBW627

PRODUCT OVERVIEW AND TYPE NUMBER STRUCTURE

Product overview U, I cores

CORE TYPE	V_e (mm^3)	A_e (mm^2)	MASS (g)
U10/8/3	309	8.07	0.9
U15/11/6	1680	32.3	4
U20/16/7	3800	56	9
U25/16/6	3380	40.3	8
I25/6/6	2590	40.3	4.5
U25/20/13	9180	104	23.5
U30/25/16	17900	161	43
U33/22/9	9490	86.5	24
U46/40/28	71300	392	182
U67/27/14	35200	204	85
U80/65/32	219000	706	560
U93/52/30	217000	840	560
U93/76/16	159000	448	400
I93/28/16	115000	447	200
U93/76/30	297000	840	760
I93/28/30	175000	836	370
U100/57/25	199000	645	500
I100/25/25	158000	645	300
U126/91/20	268800	560	680

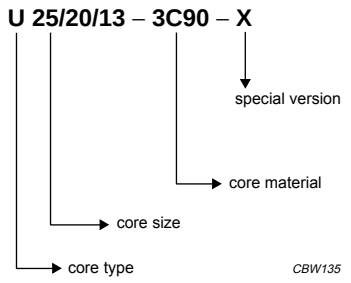

Fig.1 Type number structure for U cores.

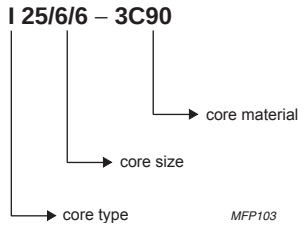

Fig.2 Type number structure for I cores.

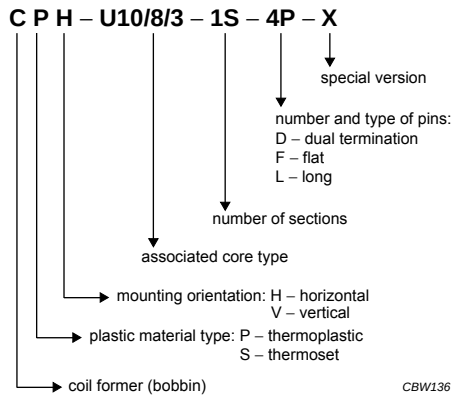

Fig.3 Type number structure for coil formers.

CORE SETS

Effective core parameters

SYMBOL	PARAMETER	VALUE	UNIT
$\Sigma(l/A)$	core factor (C1)	4.74	mm^{-1}
V_e	effective volume	309	mm^3
l_e	effective length	38.3	mm
A_e	effective area	8.07	mm^2
A_{min}	minimum area	7.91	mm^2
m	mass of core half	≈ 0.9	g

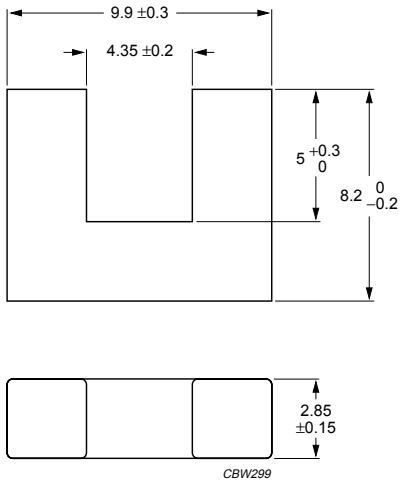

Dimensions in mm.

Fig.1 U10/8/3 core half.

Core halves

A_L measured on a combination of 2 U cores.

GRADE	A_L (nH)	μ_e	TYPE NUMBER
3C90	420 ±25%	≈ 1590	U10/8/3-3C90
3C94	470 ±25%	≈ 1770	U10/8/3-3C94

Properties of core sets under power conditions

GRADE	B (mT) at	CORE LOSS (W) at		
	H = 250 A/m; f = 25 kHz; T = 100 °C	f = 25 kHz; $\hat{B}$ = 200 mT; T = 100 °C	f = 100 kHz; $\hat{B}$ = 100 mT; T = 100 °C	f = 100 kHz; $\hat{B}$ = 200 mT; T = 100 °C
3C90	≥320	≤ 0.04	≤ 0.04	–
3C94	≥320	–	≤ 0.03	≤ 0.18

COIL FORMERS

General data 4-pins U10/8/3 coil former

PARAMETER	SPECIFICATION
Coil former material	polybuteleneterephtalate (PBT), glass-reinforced, flame retardant in accordance with *"UL 94V-0"*; UL file number E69578(M)
Pin material	copper-tin alloy (CuSn), tin (Sn) plated
Maximum operating temperature	155 °C, *"IEC 60085"*, class F
Resistance to soldering heat	*"IEC 60068-2-20"*, Part 2, Test Tb, method 1B: 350 °C, 3.5 s
Solderability	*"IEC 60068-2-20"*, Part 2, Test Ta, method 1: 235 °C, 2 s

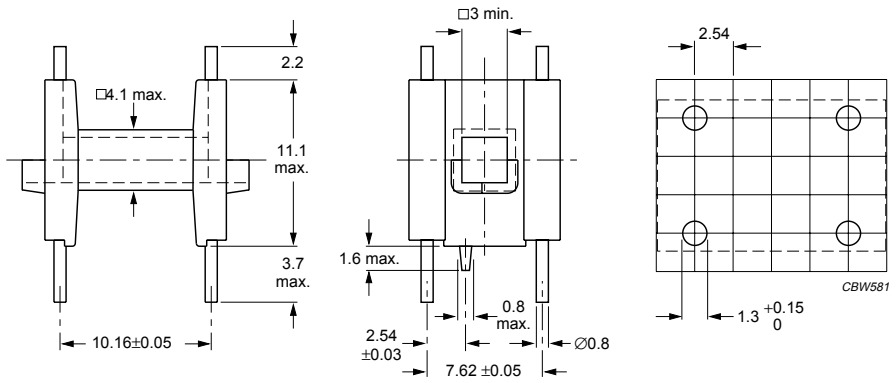

Dimensions in mm.

Fig.2 U10/8/3 coil former; 4-pins.

Winding data and area product for 4-pins U10/8/3 coil former

NUMBER OF SECTIONS	WINDING AREA (mm^2)	MINIMUM WINDING WIDTH (mm)	AVERAGE LENGTH OF TURN (mm)	AREA PRODUCT Ae x Aw (mm^4)	TYPE NUMBER
1	28	8	30	226	CPH-U10/8/3-1S-4P

CORE SETS

Effective core parameters

SYMBOL	PARAMETER	VALUE	UNIT
Σ(l/A)	core factor (C1)	1.60	mm^{-1}
V_e	effective volume	1680	mm^3
l_e	effective length	52	mm
A_e	effective area	32.3	mm^2
m	mass of core half	≈ 4	g

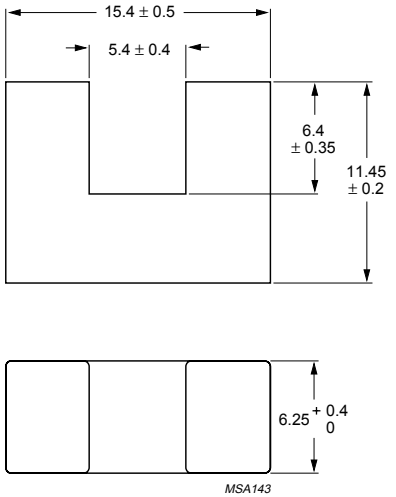

Dimensions in mm.

Fig.1 U15/11/6 core half.

Core halves

A_L measured on a combination of 2 U cores.

GRADE	A_L (nH)	μ_e	TYPE NUMBER
3C90	1400 ±25%	≈ 1900	U15/11/6-3C90
3C94	1400 ±25%	≈ 1900	U15/11/6-3C94
3C11	2400 ±25%	≈ 3080	U15/11/6-3C11
3E27	3400 ±25%	≈ 4300	U15/11/6-3E27

Properties of core sets under power conditions

GRADE	B (mT) at	CORE LOSS (W) at		
	H = 250 A/m; f = 25 kHz; T = 100 °C	f = 25 kHz; $\hat{B}$ = 200 mT; T = 100 °C	f = 100 kHz; $\hat{B}$ = 100 mT; T = 100 °C	f = 100 kHz; $\hat{B}$ = 200 mT; T = 100 °C
3C90	≥320	≤ 0.2	≤ 0.22	–
3C94	≥320	–	≤ 0.17	≤ 1.0

COIL FORMERS

General data 4-pins U15/11/6 coil former

PARAMETER	SPECIFICATION
Coil former material	polyethyleneterephtalate (PET), glass-reinforced, flame retardant in accordance with *"UL 94V-0"*; UL file number E69578 (M)
Pin material	copper-tin alloy (CuSn), tin (Sn) plated
Maximum operating temperature	155 °C, *"IEC 60085"*, class F
Resistance to soldering heat	*"IEC 60068-2-20"*, Part 2, Test Tb, method 1B: 350 °C, 3.5 s
Solderability	*"IEC 60068-2-20"*, Part 2, Test Ta, method 1: 235 °C, 2 s

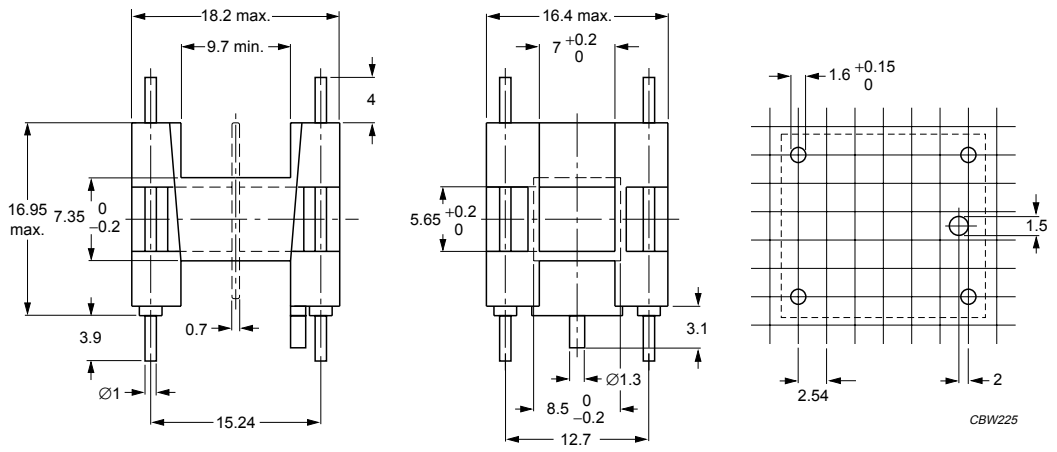

Dimensions in mm.

Fig.2 U15/11/6 coil former; 4-pins.

Winding data and area product for 4-pins U15/11/6 coil former

NUMBER OF SECTIONS	WINDING AREA (mm^2)	MINIMUM WINDING WIDTH (mm)	AVERAGE LENGTH OF TURN (mm)	AREA PRODUCT Ae x Aw (mm^4)	TYPE NUMBER
1	38.7	9.7	46.6	1250	CPH-U15/11/6-1S-4P
2	2×17.9	2×4.45	46.6	2 x 578	CPH-U15/11/6-2S-4P

CORE SETS

Effective core parameters

SYMBOL	PARAMETER	VALUE	UNIT
Σ(l/A)	core factor (C1)	1.21	mm^{-1}
V_e	effective volume	3800	mm^3
l_e	effective length	68	mm
A_e	effective area	56	mm^2
m	mass of core half	≈ 9	g

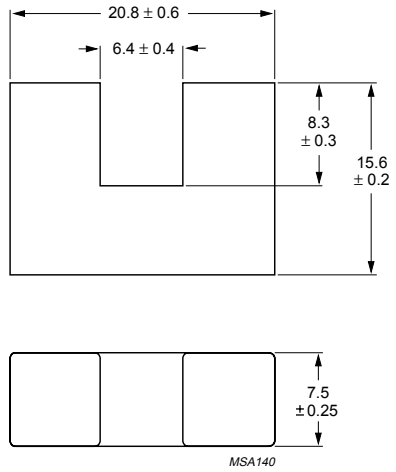

Dimensions in mm.

Fig.1 U20/16/7 core half.

Core halves

A_L measured on a combination of 2 U cores.

GRADE	A_L (nH)	μ_e	TYPE NUMBER
3C90	1900 ±25%	≈ 1950	U20/16/7-3C90
3C94	1900 ±25%	≈ 1950	U20/16/7-3C94
3C11	3100 ±25%	≈ 3000	U20/16/7-3C11
3E27	4800 ±25%	≈ 4600	U20/16/7-3E27

Properties of core sets under power conditions

GRADE	B (mT) at	CORE LOSS (W) at		
	H = 250 A/m; f = 25 kHz; T = 100 °C	f = 25 kHz; $\hat{B}$ = 200 mT; T = 100 °C	f = 100 kHz; $\hat{B}$ = 100 mT; T = 100 °C	f = 100 kHz; $\hat{B}$ = 200 mT; T = 100 °C
3C90	≥320	≤ 0.46	≤ 0.48	–
3C94	≥320	–	≤ 0.36	≤ 2.3

CORE SETS

Effective core parameters

SYMBOL	PARAMETER	VALUE	UNIT
$\Sigma(l/A)$	core factor (C1)	2.07	mm^{-1}
V_e	effective volume	3380	mm^3
l_e	effective length	83.6	mm
A_e	effective area	40.3	mm^2
m	mass of core half	≈ 8.0	g

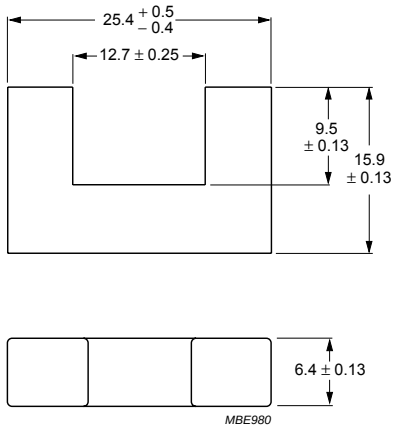

Dimensions in mm.

Fig.1 U25/16/6 core half.

Core halves

A_L measured on a combination of 2 U cores.

GRADE	A_L (nH)	μ_e	TYPE NUMBER
3C81	1400 ±25%	≈ 2300	U25/16/6-3C81
3C90	1200 ±25%	≈ 2300	U25/16/6-3C90
3C91 des	1400 ±25%	≈ 2300	U25/16/6-3C91
3C94	1200 ±25%	≈ 2300	U25/16/6-3C94
3C11	2050 ±25%	≈ 3380	U25/16/6-3C11
3E27	2500 ±25%	≈ 4130	U25/16/6-3E27

Properties of core sets under power conditions

GRADE	B (mT) at	CORE LOSS (W) at			
	H = 250 A/m; f = 25 kHz; T = 100 °C	f = 25 kHz; $\hat{B}$ = 200 mT; T = 100 °C	f = 100 kHz; $\hat{B}$ = 100 mT; T = 100 °C	f = 100 kHz; $\hat{B}$ = 200 mT; T = 100 °C	f = 400 kHz; $\hat{B}$ = 50 mT; T = 100 °C
3C81	≥320	≤ 0.78	–	–	–
3C90	≥320	≤ 0.4	≤ 0.4	–	–
3C91	≥320	–	≤ 0.23(1)	≤ 1.6(1)	–
3C94	≥320	–	≤ 0.3	≤ 2.0	–

Note

1. Measured at 60 °C.

CORE SETS

Effective core parameters measured in combination with U25/16/6

SYMBOL	PARAMETER	VALUE	UNIT
Σ(l/A)	core factor (C1)	1.59	mm^{-1}
V_e	effective volume	2590	mm^3
l_e	effective length	64.3	mm
A_e	effective area	40.3	mm^2
m	mass of I core	≈ 4.5	g

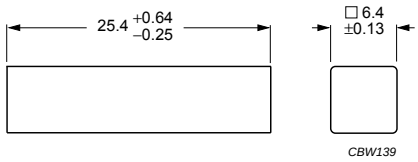

Dimensions in mm.

Fig.1 I25/6/6 core.

Core halves

A_L measured in combination with *"U25/16/6"*.

GRADE	A_L (nH)	μ_e	TYPE NUMBER
3C81	1750 ±25%	≈ 2210	I25/6/6-3C81
3C90	1500 ±25%	≈ 1900	I25/6/6-3C90
3C91 des	1750 ±25%	≈ 2210	I25/6/6-3C91
3C94	1500 ±25%	≈ 1900	I25/6/6-3C94
3C11	2500 ±25%	≈ 3160	I25/6/6-3C11
3E27	3000 ±25%	≈ 3800	I25/6/6-3E27

Properties of core sets under power conditions

Measured in combination with *"U25/16/6"*.

GRADE	B (mT) at	CORE LOSS (W) at		
	H = 250 A/m; f = 25 kHz; T = 100 °C	f = 25 kHz; $\hat{B}$ = 200 mT; T = 100 °C	f = 100 kHz; $\hat{B}$ = 100 mT; T = 100 °C	f = 100 kHz; $\hat{B}$ = 200 mT; T = 100 °C
3C81	≥320	≤ 0.6	–	–
3C90	≥320	≤ 0.3	≤ 0.3	–
3C91	≥320	–	≤ 0.18(1)	≤ 1.2(1)
3C94	≥320	–	≤ 0.23	≤ 1.6

Note

1. Measured at 60 °C.

CORE SETS

Effective core parameters

SYMBOL	PARAMETER	VALUE	UNIT
Σ(l/A)	core factor (C1)	0.85	mm^{-1}
V_e	effective volume	9180	mm^3
l_e	effective length	88.2	mm
A_e	effective area	104	mm^2
m	mass of core half	≈ 23.5	g

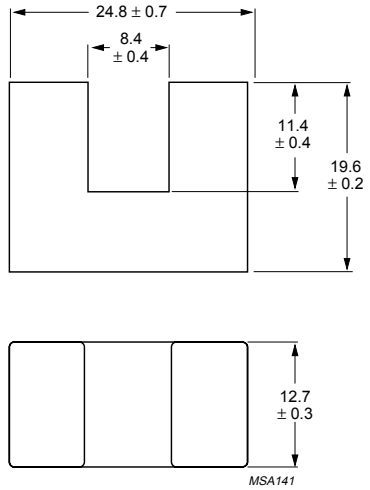

Dimensions in mm.

Fig.1 U25/20/13 core half.

Core halves

A_L measured on a combination of 2 U cores.

GRADE	A_L (nH)	μ_e	TYPE NUMBER
3C90	2900 ±25%	≈ 2000	U25/20/13-3C90
3C94	2900 ±25%	≈ 2000	U25/20/13-3C94
3C11	5000 ±25%	≈ 3400	U25/20/13-3C11
3E27	6300 ±25%	≈ 4300	U25/20/13-3E27

Properties of core sets under power conditions

GRADE	B (mT) at	CORE LOSS (W) at		
	H = 250 A/m; f = 25 kHz; T = 100 °C	f = 25 kHz; $\hat{B}$ = 200 mT; T = 100 °C	f = 100 kHz; $\hat{B}$ = 100 mT; T = 100 °C	f = 100 kHz; $\hat{B}$ = 200 mT; T = 100 °C
3C90	≥320	≤ 1.1	≤ 1.2	–
3C94	≥320	–	≤ 0.9	≤ 5.5

CORE SETS

Effective core parameters

SYMBOL	PARAMETER	VALUE	UNIT
Σ(l/A)	core factor (C1)	0.690	mm^{-1}
V_e	effective volume	17900	mm^3
l_e	effective length	111	mm
A_e	effective area	161	mm^2
m	mass of core half	≈ 43	g

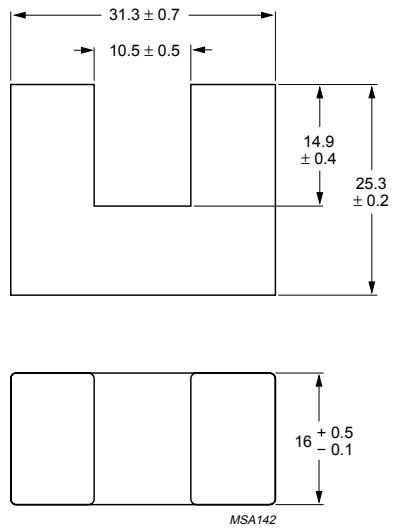

Dimensions in mm.

Fig.1 U30/25/16 core half.

Core halves

A_L measured on a combination of 2 U cores.

GRADE	A_L (nH)	μ_e	TYPE NUMBER
3C90	3700 ±25%	≈ 2030	U30/25/16-3C90
3C94	3700 ±25%	≈ 2030	U30/25/16-3C94

Properties of core sets under power conditions

GRADE	B (mT) at	CORE LOSS (W) at		
	H = 250 A/m; f = 25 kHz; T = 100 °C	f = 25 kHz; $\hat{B}$ = 200 mT; T = 100 °C	f = 100 kHz; $\hat{B}$ = 100 mT; T = 100 °C	f = 100 kHz; $\hat{B}$ = 200 mT; T = 100 °C
3C90	≥ 320	≤ 2.2	≤ 2.3	–
3C94	≥ 320	–	≤ 1.8	≤ 11

CORE SETS

Effective core parameters

SYMBOL	PARAMETER	VALUE	UNIT
$\Sigma(l/A)$	core factor (C1)	1.27	mm^{-1}
V_e	effective volume	9490	mm^3
l_e	effective length	110	mm
A_e	effective area	86.5	mm^2
m	mass of core half	≈ 24	g

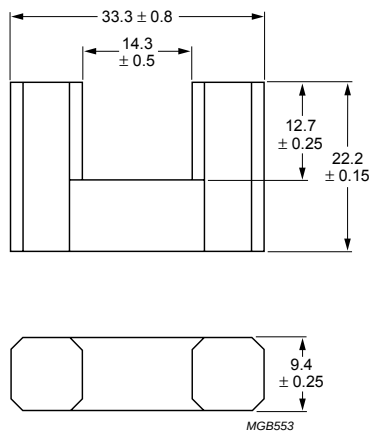

Dimensions in mm.

Fig.1 U33/22/9 core half.

Core halves

A_L measured on a combination of 2 U cores.

GRADE	A_L (nH)	μ_e	TYPE NUMBER
3C81	2300 ±25%	≈ 2320	U33/22/9-3C81
3C91 des	2300 ±25%	≈ 2320	U33/22/9-3C91

Properties of core sets under power conditions

GRADE	B (mT) at	CORE LOSS (W) at		
	H = 250 A/m; f = 25 kHz; T = 100 °C	f = 25 kHz; $\hat{B}$ = 200 mT; T = 100 °C	f = 100 kHz; $\hat{B}$ = 100 mT; T = 100 °C	f = 100 kHz; $\hat{B}$ = 200 mT; T = 100 °C
3C81	≥320	≤ 2.2	–	–
3C91	≥320	–	≤ 0.57[1]	≤ 4.3[1]

Note

Note

1. Measured at 60 °C.

U CORES

Effective core parameters

SYMBOL	PARAMETER	VALUE	UNIT
Σ(l/A)	core factor (C1)	0.464	mm^{-1}
V_e	effective volume	71300	mm^3
l_e	effective length	182	mm
A_e	effective area	392	mm^2
A_{min}	minimum area	392	mm^2
m	mass of core half	≈ 182	g

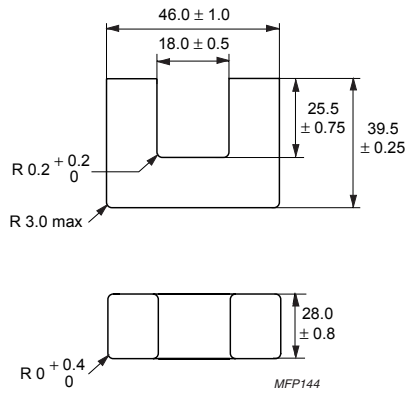

Dimensions in mm.

Fig.1 U46/40/28 core half.

Core halves

A_L measured on a combination of 2 U cores.

GRADE	A_L (nH)	μ_e	TYPE NUMBER
3C90	6000 ± 25 %	≈ 2215	U46/40/28-3C90
3F3	5100 ± 25 %	≈ 1880	U46/40/28-3F3

Cores can be gapped on request in one leg.

Properties of core sets under power conditions

GRADE	B (mT) at	CORE LOSS (W) at		
	H = 250 A/m; f = 25 kHz; T = 100 °C	f = 100 kHz; $\hat{B}$ = 100 mT; T = 100 °C	f = 100 kHz; $\hat{B}$ = 200 mT; T = 100 °C	f = 400 kHz; $\hat{B}$ = 50 mT; T = 100 °C
3C90	≥ 320	≤ 9.6	≤ 45	–
3F3	≥ 320	≤ 9.6	–	≤ 45

CORE SETS

Effective core parameters

SYMBOL	PARAMETER	VALUE	UNIT
Σ(l/A)	core factor (C1)	0.850	mm^{-1}
V_e	effective volume	35200	mm^3
l_e	effective length	173	mm
A_e	effective area	204	mm^2
m	mass of core half	≈ 85	g

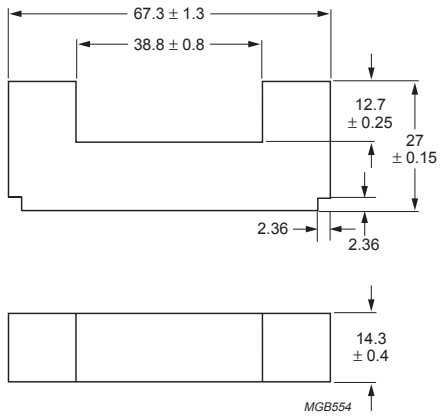

Dimensions in mm.

Fig.1 U67/27/14 core half.

Core halves

A_L measured on a combination of 2 U cores.

GRADE	A_L (nH)	μ_e	TYPE NUMBER
3C81	3800 ±25%	≈ 2570	U67/27/14-3C81
3C91 des	3800 ±25%	≈ 2570	U67/27/14-3C91

Properties of core sets under power conditions

GRADE	B (mT) at	CORE LOSS (W) at		
	H = 250 A/m; f = 25 kHz; T = 100 °C	f = 25 kHz; $\hat{B}$ = 200 mT; T = 100 °C	f = 100 kHz; $\hat{B}$ = 100 mT; T = 100 °C	f = 100 kHz; $\hat{B}$ = 200 mT; T = 100 °C
3C81	≥320	≤ 8.1	–	–
3C91	≥320	–	≤ 2.1 (1)	≤ 16 (1)

Note

1. Measured at 60 °C.

U CORES

Effective core parameters

SYMBOL	PARAMETER	VALUE	UNIT
Σ(l/A)	core factor (C1)	0.439	mm^{-1}
V_e	effective volume	219000	mm^3
l_e	effective length	310	mm
A_e	effective area	706	mm^2
A_{min}	minimum area	704	mm^2
m	mass of core half	≈ 560	g

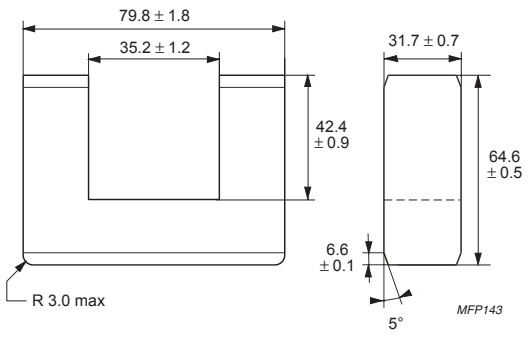

Dimensions in mm.

Fig.1 U80/65/32 core half.

Core halves

A_L measured on a combination of 2 U cores.

GRADE	A_L (nH)	μ_e	TYPE NUMBER
3C90	6000 ± 25 %	≈ 2095	U80/65/32-3C90
3F3	5340 ± 25 %	≈ 1865	U80/65/32-3F3

Properties of core sets under power conditions

GRADE	B (mT) at	CORE LOSS (W) at	
	H = 250 A/m; f = 25 kHz; T = 100 °C	f = 25 kHz; $\hat{B}$ = 200 mT; T = 100 °C	f = 100 kHz; $\hat{B}$ = 100 mT; T = 100 °C
3C90	≥ 320	≤ 30	≤ 32
3F3	≥ 320	–	≤ 34

U CORES

Effective core parameters

SYMBOL	PARAMETER	VALUE	UNIT
Σ(l/A)	core factor (C1)	0.307	mm^{-1}
V_e	effective volume	217000	mm^3
l_e	effective length	258	mm
A_e	effective area	840	mm^2
m	mass of core half	≈ 560	g

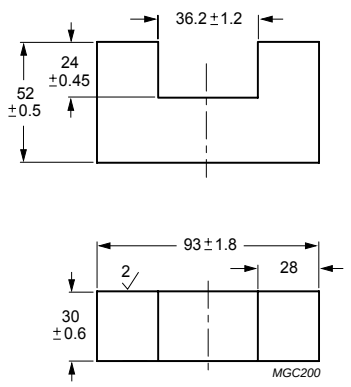

Dimensions in mm.

Fig.1 U93/52/30 core half.

Core halves

A_L measured on a combination of 2 U cores.

GRADE	A_L (nH)	μ_e	TYPE NUMBER
3C90	8700 ±25%	≈ 2100	U93/52/30-3C90
3C94	8700 ±25%	≈ 2100	U93/52/30-3C94

Properties of core sets under power conditions

GRADE	B (mT) at	CORE LOSS (W) at	
	H = 250 A/m; f = 25 kHz; T = 100 °C	f = 25 kHz; $\hat{B}$ = 200 mT; T = 100 °C	f = 100 kHz; $\hat{B}$ = 100 mT; T = 100 °C
3C90	≥ 320	≤ 28	≤ 38
3C94	≥ 320	–	≤ 30

U CORES

Effective core parameters

SYMBOL	PARAMETER	VALUE	UNIT
Σ(l/A)	core factor (C1)	0.790	mm^{-1}
V_e	effective volume	159000	mm^3
l_e	effective length	354	mm
A_e	effective area	448	mm^2
m	mass of core half	≈ 400	g

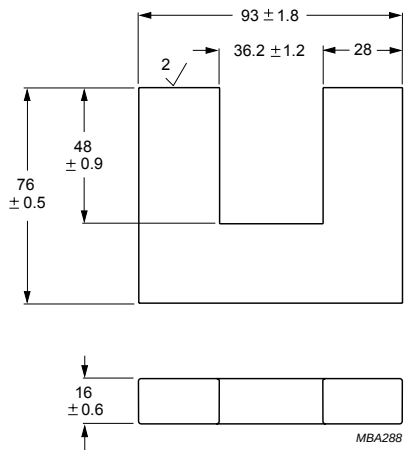

Dimensions in mm.

Fig.1 U93/76/16 core half.

Core halves

A_L measured on a combination of 2 U cores.

GRADE	A_L (nH)	μ_e	TYPE NUMBER
3C90	3400 ±25%	≈ 2200	U93/76/16-3C90
3C94	3400 ±25%	≈ 2200	U93/76/16-3C94

Properties of core sets under power conditions

GRADE	B (mT) at	CORE LOSS (W) at	
	H = 250 A/m; f = 25 kHz; T = 100 °C	f = 25 kHz; $\hat{B}$ = 200 mT; T = 100 °C	f = 100 kHz; $\hat{B}$ = 100 mT; T = 100 °C
3C90	≥ 320	≤ 20	≤ 23
3C94	≥ 320	–	≤ 18

CORE SETS

Effective core parameters in combination with U93/76/16

SYMBOL	PARAMETER	VALUE	UNIT
Σ(l/A)	core factor (C1)	0.576	mm^{-1}
V_e	effective volume	115000	mm^3
l_e	effective length	258	mm
A_e	effective area	447	mm^2
m	mass of core	≈ 200	g

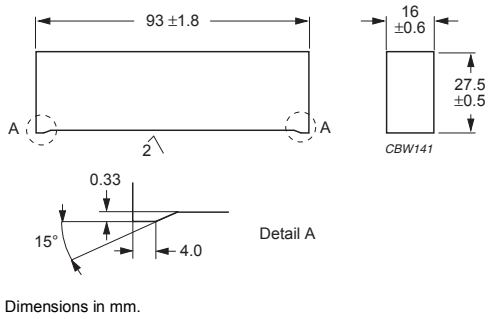

Fig.1 I93/28/16 core.

Core data

A_L measured in combination with *"U93/76/16"*.

GRADE	A_L (nH)	μ_e	TYPE NUMBER
3C90	4600 ±25%	≈ 2100	I93/28/16-3C90
3C94	4600 ±25%	≈ 2100	I93/28/16-3C94

Properties of core sets under power conditions

Measured in combination with *"U93/76/16"*.

GRADE	B (mT) at	CORE LOSS (W) at	
	H = 250 A/m; f = 25 kHz; T = 100 °C	f = 25 kHz; $\hat{B}$ = 200 mT; T = 100 °C	f = 100 kHz; $\hat{B}$ = 100 mT; T = 100 °C
3C90	≥320	≤ 15	≤ 16
3C94	≥320	–	≤ 13

U CORES

Effective core parameters

SYMBOL	PARAMETER	VALUE	UNIT
Σ(l/A)	core factor (C1)	0.421	mm^{-1}
V_e	effective volume	297000	mm^3
l_e	effective length	354	mm
A_e	effective area	840	mm^2
m	mass of core half	≈ 760	g

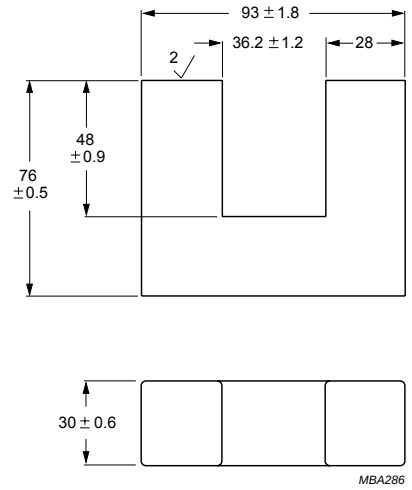

Dimensions in mm.

Fig.1 U93/76/30 core half.

Core halves

A_L measured on a combination of 2 U cores.

GRADE	A_L (nH)	μ_e	TYPE NUMBER
3C90	6400 ±25%	≈ 2200	U93/76/30-3C90
3C94	6400 ±25%	≈ 2200	U93/76/30-3C94

Properties of core sets under power conditions

GRADE	B (mT) at	CORE LOSS (W) at	
	H = 250 A/m; f = 25 kHz; T = 100 °C	f = 25 kHz; $\hat{B}$ = 200 mT; T = 100 °C	f = 100 kHz; $\hat{B}$ = 100 mT; T = 100 °C
3C90	≥ 320	≤ 40	≤ 52
3C94	≥ 320	–	≤ 39

CORE SETS

Effective core parameters in combination with U93/52/30

SYMBOL	PARAMETER	VALUE	UNIT
Σ(l/A)	core factor (C1)	0.251	mm^{-1}
V_e	effective volume	175000	mm^3
l_e	effective length	210	mm
A_e	effective area	836	mm^2
m	mass of core	≈ 370	g

Effective core parameters in combination with U93/76/30

SYMBOL	PARAMETER	VALUE	UNIT
Σ(l/A)	core factor (C1)	0.307	mm^{-1}
V_e	effective volume	217000	mm^3
l_e	effective length	258	mm
A_e	effective area	840	mm^2
m	mass of core	≈ 370	g

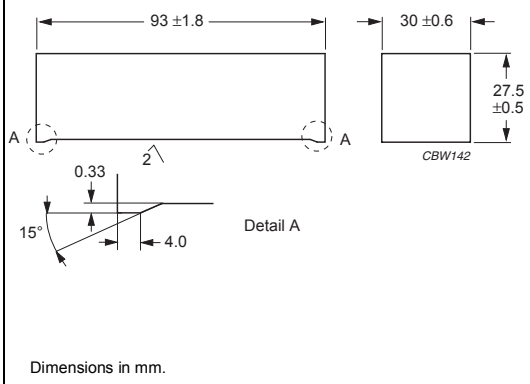

Fig.1 I93/28/30 core.

Core data

GRADE	A_L (nH)	μ_e	TYPE NUMBER
3C90	10700 ±25%(1)	≈ 2150	I93/28/30-3C90
	8700 ±25%(2)	≈ 2150	
3C94	10700 ±25%(1)	≈ 2150	I93/28/30-3C94
	8700 ±25%(2)	≈ 2150	

Notes

1. Measured in combination with *"U93/52/30"*.
2. Measured in combination with *"U93/76/30"*.

Properties of core sets under power conditions

GRADE	B (mT) at	CORE LOSS (W) at	
	H = 250 A/m; f = 25 kHz; T = 100 °C	$\hat{f}$ = 25 kHz; $\hat{B}$ = 200 mT; T = 100 °C	$\hat{f}$ = 100 kHz; $\hat{B}$ = 100 mT; T = 100 °C
3C90	≥330	≤ 24(1)	≤ 31(1)
	≥330	≤ 28(2)	≤ 38(2)
3C94	≥330	–	≤ 24(1)
	≥330	–	≤ 30(2)

Notes

1. Measured in combination with *"U93/52/30"*.
2. Measured in combination with *"U93/76/30"*.

U CORES

Effective core parameters

SYMBOL	PARAMETER	VALUE	UNIT
Σ(l/A)	core factor (C1)	0.478	mm^{-1}
V_e	effective volume	199 000	mm^3
l_e	effective length	308	mm
A_e	effective area	645	mm^2
m	mass of core half	≈ 500	g

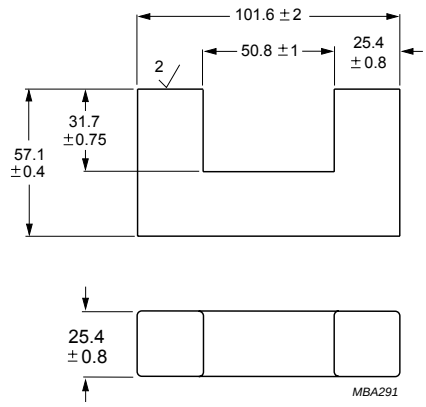

Dimensions in mm.

Fig.0 U100/57/25 core half.

Core halves

A_L measured on a combination of 2 U cores.

GRADE	A_L (nH)	μ_e	TYPE NUMBER
3C90	5500 ±25%	≈ 2200	U100/57/25-3C90
3C94	5500 ±25%	≈ 2200	U100/57/25-3C94

Properties of core sets under power conditions

GRADE	B (mT) at	CORE LOSS (W) at	
	H = 250 A/m; f = 25 kHz; T = 100 °C	f = 25 kHz; $\hat{B}$ = 200 mT; T = 100 °C	f = 100 kHz; $\hat{B}$ = 100 mT; T = 100 °C
3C90	≥ 320	≤ 26	≤ 32
3C94	≥ 320	–	≤ 26

CORE SETS

Effective core parameters in combination with U100/57/25

SYMBOL	PARAMETER	VALUE	UNIT
$\Sigma(l/A)$	core factor (C1)	0.379	mm^{-1}
V_e	effective volume	158000	mm^3
l_e	effective length	245	mm
A_e	effective area	645	mm^2
m	mass of core	≈ 300	g

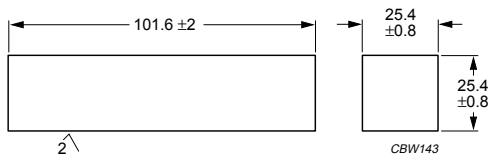

Dimensions in mm.

Fig.1 I100/25/25 core.

Core data

A_L measured in combination with *"U100/57/25"*.

GRADE	A_L (nH)	μ_e	TYPE NUMBER
3C90	6700 ±25%	≈ 2150	I100/25/25-3C90
3C94	6700 ±25%	≈ 2150	I100/25/25-3C94

Properties of core sets under power conditions

Core loss measured in combination with *"U100/57/25"*.

GRADE	B (mT) at	CORE LOSS (W) at	
	H = 250 A/m; f = 25 kHz; T = 100 °C	f = 25 kHz; $\hat{B}$ = 200 mT; T = 100 °C	f = 100 kHz; $\hat{B}$ = 100 mT; T = 100 °C
3C90	≥ 330	≤ 21	≤ 25
3C94	≥ 330	–	≤ 21

U CORES

Effective core parameters

SYMBOL	PARAMETER	VALUE	UNIT
$\Sigma(l/A)$	core factor (C1)	0.857	mm^{-1}
V_e	effective volume	268800	mm^3
l_e	effective length	480	mm
A_e	effective area	560	mm^2
A_{min}	minimum area	560	mm^2
m	mass of core half	≈ 680	g

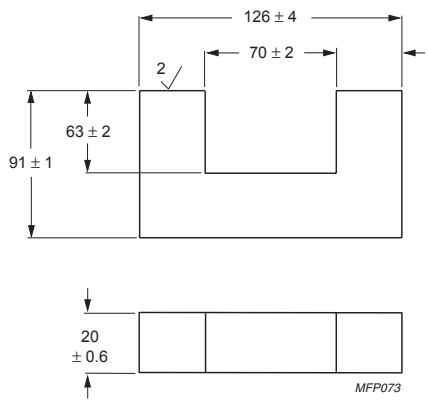

Dimensions in mm.

Fig.1 U126/91/20 core half.

Core halves

A_L measured on a combination of 2 U cores.

GRADE	A_L (nH)	μ_e	TYPE NUMBER
3C90	3000 ± 25 %	≈ 2050	U126/91/20-3C90
3C94	3000 ± 25 %	≈ 2050	U126/91/20-3C94

Properties of core sets under power conditions

GRADE	B (mT) at	CORE LOSS (W) at	
	H = 250 A/m; f = 25 kHz; T = 100 °C	f = 25 kHz; $\hat{B}$ = 200 mT; T = 100 °C	f = 100 kHz; $\hat{B}$ = 100 mT; T = 100 °C
3C90	≥ 320	≤ 35	≤ 40
3C94	≥ 320	–	≤ 32

Soft Ferrites

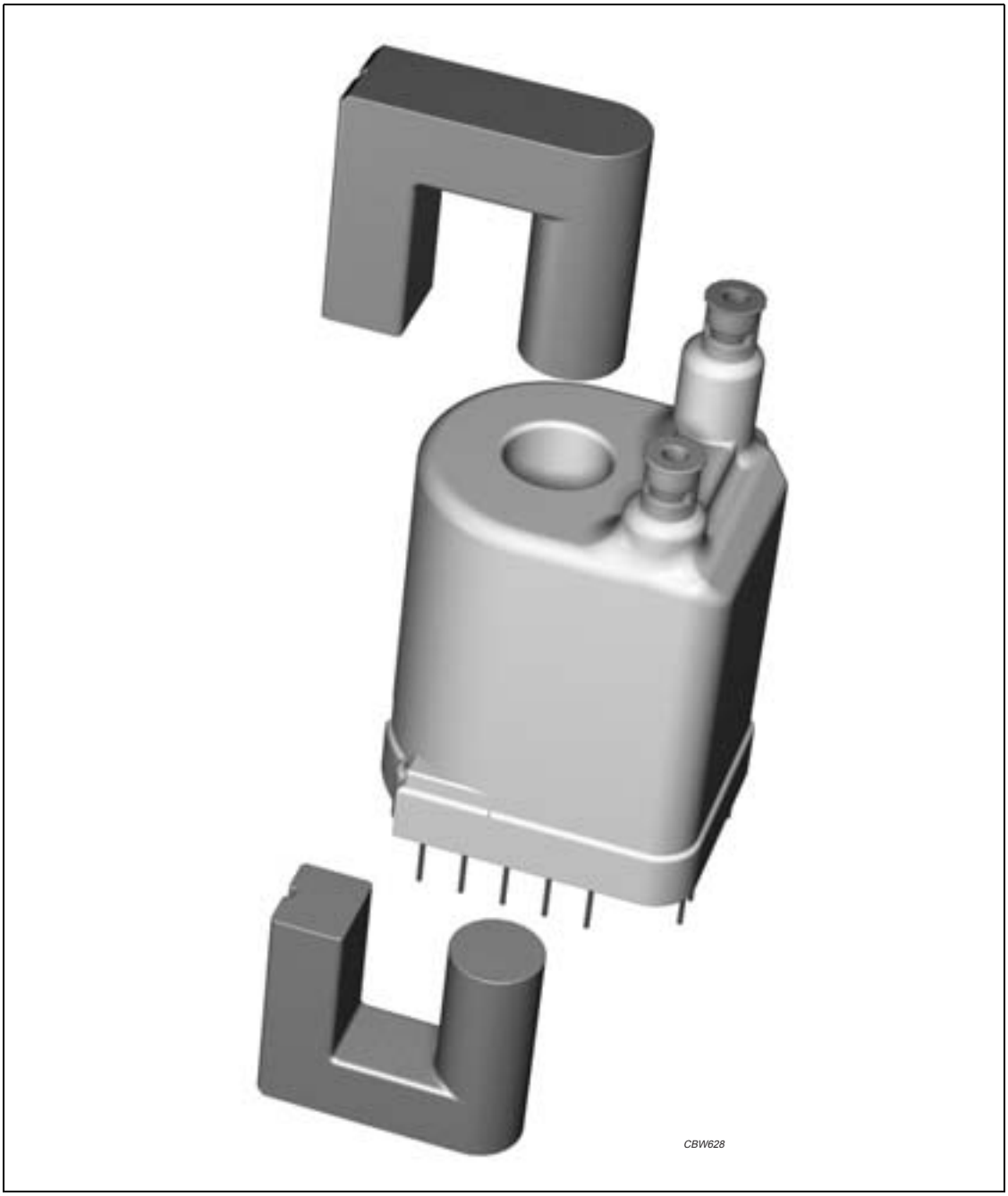
CBW628

PRESENT TYPES

Our present selection is displayed in Table 2. In principle, any core shape can be supplied in all available grades. Other customized shapes can be manufactured on request.

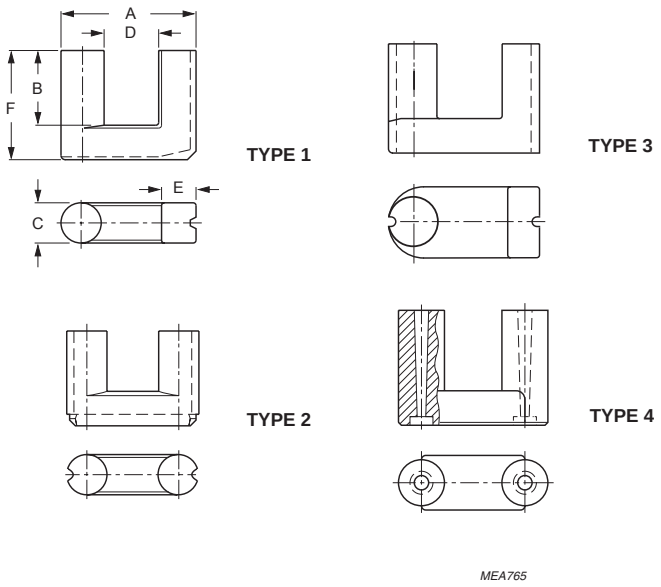

For dimensions see Table 1.

Fig.1 UR cores for line output and welding transformers.

Table 1 Mechanical data

DESCRIPTION	SHAPE	DIMENSIONS (mm)						EFFECTIVE CORE PARAMETERS				
		A	B	C	D_{min}	E	F	C1 (mm^{-1})	V_e (mm^3)	l_e (mm)	A_e (mm^2)	MASS (g)
UR35/27.5/13	1	35.4	17.5	13.0	12.0	10.0	27.5	1.00	16640	129	129	41
UR37/26/18	3	36.9	16.8	14.7	13.9	7.3	25.7	0.865	18900	128	148	55
UR39/35/15	1	38.7	24.8	14.9	15.0	9.1	35.2	1.094	24300	163	149	64
UR42/21/12	2	41.8	11.1	11.9	18.2	11.9	20.6	1.09	11800	113	104	31
UR46/21/11	2	46.2	11.85	11.15	24.4	11.15	21.25	1.47	11600	129	88	29
UR48/39/17	1	48.0	26.9	17.0	17.4	13.0	39.4	0.865	39990	186	215	100
UR55/38/36	3	54.9	25.5	23.5	19.6	12.0	37.5	0.450	78570	188	418	198
UR57/28/16	2	57.65	16.0	15.5	26.9	15.9	28.4	0.953	27900	163	171	70
UR59/36/17	2	59.34	21.9	17.0	25.5	17.0	35.8	0.900	39700	189	210	99
UR64/29/14	2	64.0	18.1	13.8	36.1	13.8	29.5	1.26	27040	185	147	64
UR64/40/20	4	64.0	26.5	20.0	23.2	20.0	40.5	0.724	61000	210	290	160
UR64/40/20-D	4	64.0	26.5	20.0	23.2	20.0	40.5	0.685	64900	211	308	168
UR70/33/17	2	68.37	19.05	17.25	35.0	17.25	33.35	0.921	43800	197	214	103

Table 2 Type numbers

SHAPE	MATERIAL GRADE		
	3C81	3C30	3C90
1		UR35/27.5/13-3C30	
3			UR37/26/18-3C90
1			UR39/35/15-3C90
2	UR42/21/12-3C81		
2			UR46/21/11-3C90
1		UR48/39/17-3C30	
3			UR55/38/36-3C90
2		UR57/28/16-3C30	UR57/28/16-3C90
2		UR59/36/17-3C30	UR59/36/17-3C90
2	UR64/29/14-3C81		UR64/29/14-3C90
4			UR64/40/20-3C90
4			UR64/43/20-3C90
2			UR70/33/17-3C90

Soft Ferrites

For more information on Product Status Definitions, see page 3.

FERROXTAG

Smart on metal, Smart on liquid, Smart at speed

Ferroxtag is a new family of RFID (Radio Frequency IDentification) tags suitable for operation attached to metallic items, such as totes, barrels, gas cylinders and industrial equipment. Operation frequency is 13.56 MHz. Ferroxtag's key feature is the direction of the field activating the device : it is not perpendicular to the identified item but parallel to it ; this means that the performance is almost independent of the material of the item identified. There's no need to worry about electromagnetic reflection on metals.
The Ferroxtag core is an outstanding high magnetic permeability ferrite material that enhances the performance of the winding, thus reducing the dimensions of the coil. There are 3 versions of the tag :
screw box, circuit mount and L-shape.

Fig.1 Logos for Ferroxtag.

Applications

- Asset tracking
- Food traceability
- Process control
- Personal identification
- Counterfeiting prevention
- Luggage tracking
- Animal identification

More information on RFID and Ferroxtag, including news :
www.ferroxtag.com

PRODUCT DESCRIPTION

General

SCREW BOX	CIRCUIT MOUNT	L-SHAPE
a High Frequency (13.56 MHz) RFID tag optimized for identification of metallic items. Supports ISO15693 and ISO18000-3 air interface.		
It can be screwed to the item and/or stuck on it with the bottom side adhesive tape. The reading range is 30 cm on metal. Overall dimensions are 25 x 12.5 x 5 mm, including the holes for screws.	It can be soldered on a PCB like any SMD component. The reading range is 30 cm on metal. Overall dimensions are 15 x 8 x 2.5 mm.	An ID number bar code is printed on the encapsulation. This allows fast automatic reading through RFID technology and reading with a standard bar code reader. The reading range is 35 cm. The encapsulation protects the device while it eases the mounting on the corner of the item by means of the adhesive sticker supplied in the back.

PRODUCT DESCRIPTION (Continued)

Mechanical properties

SCREW BOX	CIRCUIT MOUNT	L-SHAPE
Operating temperature –25...130 °C **Dimensions** 25 x 12.5 x 5 mm **Weight** 2.5 grams **Case material** Polyamide 66 UL94-V0 compliant sealed with epoxy resin **Degree of protection** IP68 **Colors** Black, blue, brown, beige **Connection to items** Screws, glue, double sided adhesive tape	**Operating temperature** –25...130 °C **Dimensions** 15 x 8 x 2.5 mm **Weight** 2.5 grams **Connection to PCB** Soldering as SMD component	**Operating temperature** –25...60 °C **Dimensions** 42 x 20 x 12 mm **Weight** 3.5 grams **Case material** ABS **Degree of protection** IP68 **Colors** Black, others upon request **Connection to items** Glued or stuck
Ferroxtag mechanical properties make this product ideal for metal container and metallic items identification. The encapsulation protects the device against impacts and harsh environments, making it suitable for industrial applications.	Ferroxtag mechanical properties make this product ideal for electronics identification. The tag can be soldered anywhere on a PCB.	Ferroxtag mechanical properties make this product ideal for identification in the vicinity of metallic items. The encapsulation protects and eases the installation in a wide range of boxes and assets.

Functional properties

SCREW BOX	CIRCUIT MOUNT	L-SHAPE
Operating frequency 13.56 MHz (ISM, licence free) **Air interface** ISO 15693, ISO 18000-3 Readable and writable with most common HF readers **Unique identifier** 8 bytes **EEPROM memory** 1024 bits, 32 blocks of 4 bytes **Anticollision support** Yes **Data transfer** Up to 53 kbits/sec		
Reading range On metal 30 cm (typical for 4 watts reader)		**Reading range** 35 cm (typical for 4 watts reader) **Bar code printing** Thermally printed on 12 x 24 mm sticker **Bar code ID** Last 4 bytes of the tag ID (8 hex characters)
The outstanding reading range in such a small package combined with the ability to work around metals makes Ferroxtag an ideal alternative for both low and high frequency tags.		Thanks to the double identification (RFID and bar code) it possible to identify the item in the field with a hand held bar code reader.

Product types

SHAPE	SEALING	COLOUR	PRETUNING	BAR CODE	PACKING
Screw box	silicone	black	none	none	bulk
		brown	metal plate		
	epoxy	blue	none		
		white	metal plate		
L-shape	ABS	black	none	none	
				sticker	
Circuit mount	none	not applicable	none	none	blister tape
			metal plate		

For more information on Product Status Definitions, see page 3.

INTRODUCTION

Transponders are electronic devices capable of sending short RF messages upon request. These messages are commonly used to identify something where the transponder is attached, but can be used to send data as well. The term transponder comes from transmitter / responder.

There are many different types of transponders, depending on the final use of the transponder, and on the operating frequency. Low Frequency Magnetic Communication (below 500 kHz) commonly uses ferrite cores to increase the performance (and distance range) of the transponder.

Ferroxcube provides a wide range of ferrite cores fitting many of the existing market requirements, as well as years of experience in designing custom shapes for specific needs. New materials have been developed improving temperature stability and reaching higher permeability values. In addition, advanced features like metallized contacts or tighter tolerances on mechanical and electrical parameters are feasible.

Newly developed materials include 4B2 and 4B4 improving the temperature stability and robustness of the complete system thanks to their high density structure. Also 3B7 has been optimized for the transponder shapes. Ferroxcube materials cover a wide range of needs, from temperature stability with αF as low as 1 (from –40 to +85°C) to high Q factor with $tg\delta/\mu$ lower than 100×10^{-6} at 500 kHz. They are available in Nickel Zinc (4B1, 4B2, 4B4) high resistivity and Manganese Zinc (3C90, 3B7).

Special features

PVD metallized terminals on request.
- Best adhesion ferrite-metallization-PCB.
- High accuracy layer thickness and size of the footprint.
- Low height metallization provides optimum Q factor.

Tightest length tolerance.
- Absolute tolerance down to ± 0.1 mm.
- Minimizes the spread in electrical properties.

Advanced features

- Diameter tolerance down to ± 0.015 mm on ground rods.
- Length tolerance down to ± 0.2 mm on rods.
- Inductance sorting out in groups of ± 1 %.
- Minimum rod diameter down to 0.3 mm.
- Parylene-C coating on rods and other shapes.
- Metallized terminals in silver palladium for SMD products.
- Custom shapes available on request.

Applications

- Automotive
- Wireless sensors
- Asset tracking
- Food traceability
- Process control
- Personal identification
- Counterfeiting prevention
- Luggage tracking
- Animal identification

Soft Ferrites

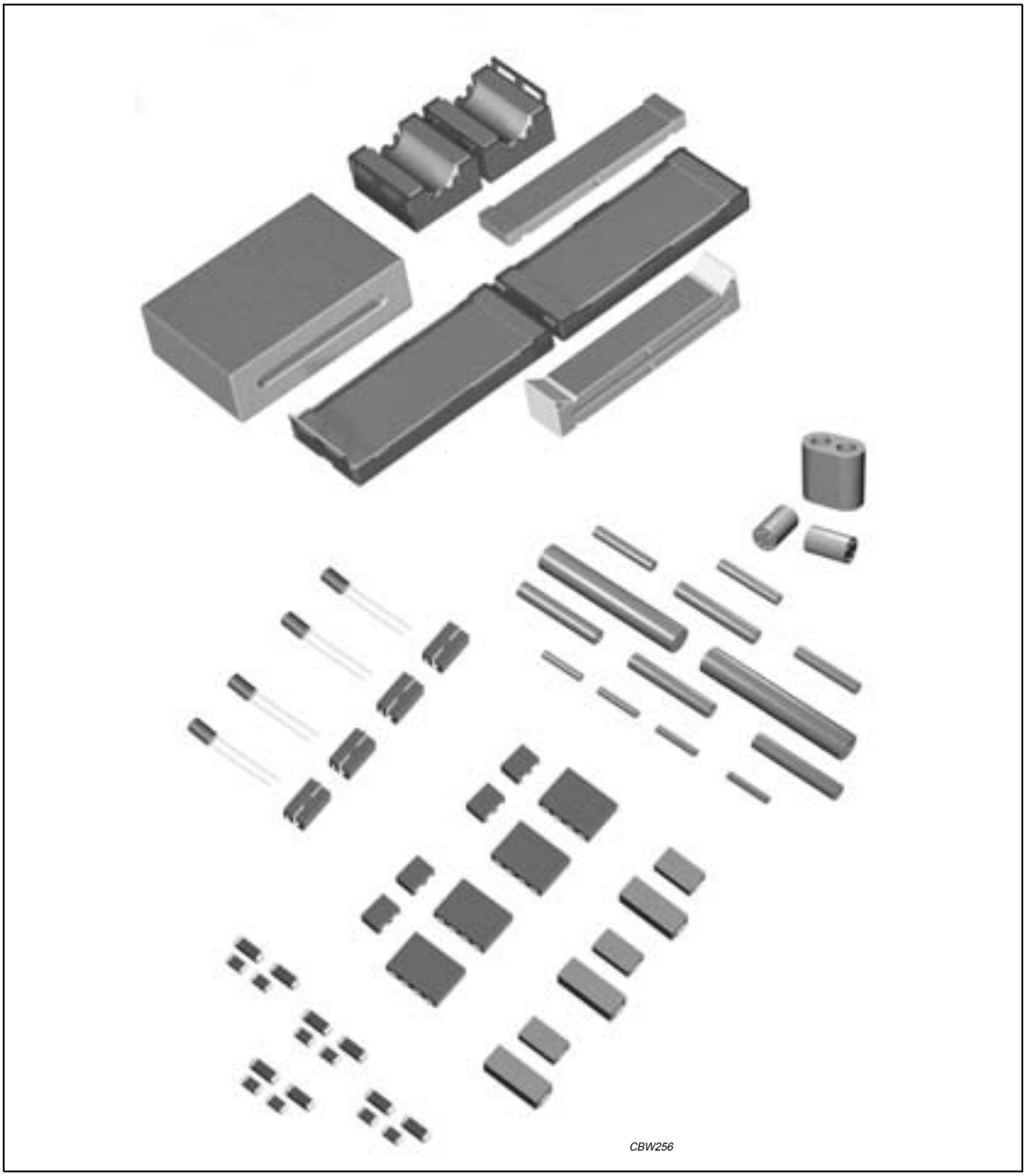
CBW256

PRODUCT OVERVIEW AND TYPE NUMBER STRUCTURE

Product overview EMI-suppression products

CORE TYPE	DESCRIPTION
BAR	bar
BC	bobbin core
BD	bead
BDS	bead SMD
BDW	bead on wire
CLI-CSU	clip for CSU type cable shield
CMS	common mode choke SMD
CSA	cable shield arcade
CSA-EN	cable shield arcade encapsulated
CSC	cable shield C-shape
CSC-EN	cable shield C-shape encapsulated
CSF	cable shield flat
CST	cable shield tubular
CSU	cable shield U-shape
CSU-EN	cable shield U-shape encapsulated
FAR	flat antenna rod
FXF	Ferroxfoil flexible sheet EMI absorber
FXT	Ferroxtag RFID tag
MHB	multihole core binocular (incl miniature balun core)
MHC	multihole core circular
MHR	multihole core rectangular
MLH	multilayer inductor high frequency
MLI	multilayer inductor
MLN	multilayer suppressor narrowband
MLP	multilayer suppressor power
MLS	multilayer suppressor
ROD	rod
TUB	tube
WBC	wideband choke
WBS	wideband choke SMD
WBSM	wideband choke SMD metallized
T	toroid (ring core)
TAR	transponder antenna rod
TC	toroid coated with parylene C
TL	toroid coated with lacquer (converted to epoxy)
TN	toroid coated with nylon
TX	toroid coated with epoxy

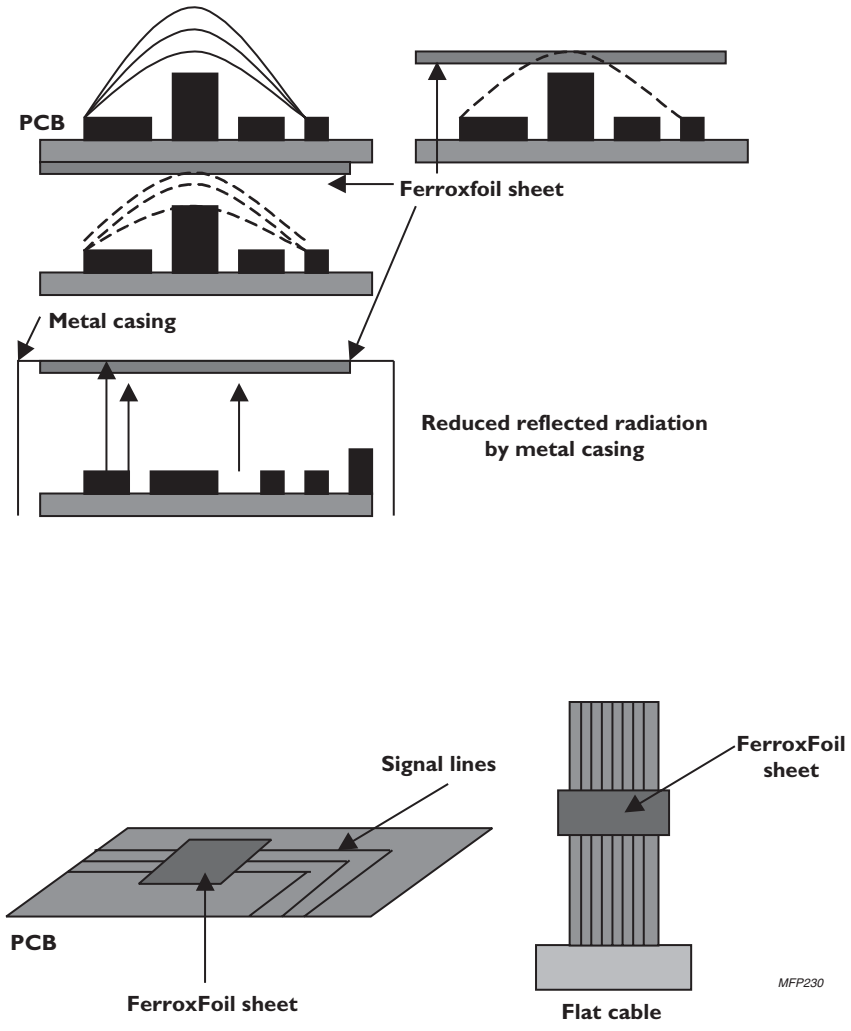

For more information on Product Status Definitions, see page 3.

FerroxFoil - Flexible sheet EMI absorbers

Radiated EMI can be confined by enclosing the source in a metal box. This reflects the signal back without attenuation and will not lower the general noise level around the source. It's better to enclose the source with an absorbing material. That is the case with FerroxFoil products, consisting of a sheet of absorptive material, constituted by a lossy magnetic material distributed in an organic matrix, which absorbs the electromagnetic energy of the incident radiation and converts it into heat. Its flexible structure provides an excellent processability and allows its use in a huge variety of configurations and applications : the sheets can easily be cut to custom shapes and sizes and wrapped closely around the radiation source. This makes them very well suited for retrofit solutions if the source of interference has not been found yet. Moreover, with its high electrical resistivity it can be applied on conductive material. The materials are effective in the wide frequency band 100 MHz - 30 GHz and one HF material around the RFID frequency 13.56 MHz. Ferroxfoil comes in four different grades :

- 5W1 The basic grade
- 5R1 High resistivity for high insulation
- 5F1 Higher frequencies (500 MHz - 30 GHz)
- 5T1 Shielding metal parts in RFID at 13.56 MHz

For all grades, the sheets are available with different thickness, depending on the degree of attenuation required.

Applications / Examples of use

Applications can be found where ever radiated EMI is present : in the far field (prevention of EMI radiation and protection against incoming EMI) or in the near field (between components on a PCB, between PCB's, around transmission lines) and to shield metal objects for RFID in the HF band (13.56 MHz). In the far field, plane waves coincide with the sheet surface and are either frontally reflected, absorbed in the sheet or transmitted. All materials have been engineered in such a way that reflection is low and absorption high. Reflection depends on the ratio of permeability and permittivity, while absorption depends on magnetic losses. In the near field, the geometry of the shielded object is important and it's difficult to give general rules other than absorption by magnetic losses.

Examples :

- Noise coupling reduction between components on the same PCB
- Top shields for fast digital IC's (clock, microprocessor, memory)
- Prevention of unwanted high frequency circuit resonances
- Noise coupling reduction between circuits on different (stacked) PCB's
- Noise coupling reduction between PCB circuits and an LCD display
- SAR regulation for mobile phones (human head protection)
- Noise absorption from PCB transmission lines and flat cable connections
- Noise absorption on steel casing inside to lower general radiation level
- Enhanced reading distance of RFID tags in the proximity of metals
- Directional shielding to prevent interference in wireless communication
- Directional shielding to prevent interference from radar equipment
- Directional shielding to prevent interference from medical equipment

Materials and properties

PARAMETER	5W1	5R1	5F1	5T1
Main Feature / Application	High Performance Wide Band	High Resistivity / High Insulation	HF Use / Semi-Microwave Band	RFID Applications
Recommended frequency range	100 MHz - 10 GHz	100 MHz - 10 GHz	500 MHz - 30 GHz	13.56 MHz
Operating temperature range (ºC)	-25 to +125			
Resistivity (Ωm)	10	10^4	10	10
Density (g/cm^3), typical	3.0	3.0	4.0	3.0
Typical initial permeability (μ_i), 100 MHz	10	5	5	10
Min / Max sheet dimensions (mm)	50 x 50 / 300 x 200			
Min / Max sheet thickness (mm)	0.1 / 6.0			
Typical sheet dimensions / thickness (mm)	100 x 100 x 0.5			
	100 x 100 x 1.0			
Environment	RoHS Compliant : Lead Free / Halogen Free			

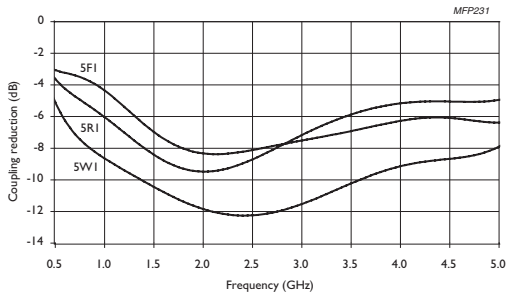

Fig.1 Attenuation of coupling noise. (sheet 0.5 mm)

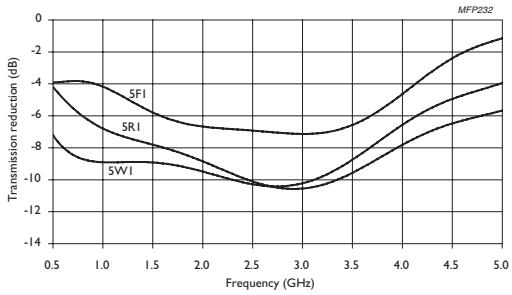

Fig.2 Attenuation of transmitted noise (sheet 0.5 mm)

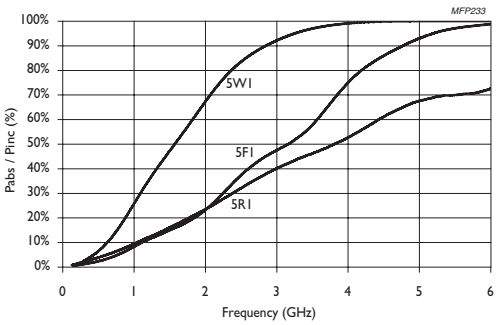

Fig.3 Noise absorption on microstrip transmission lines (sheet 1 mm)

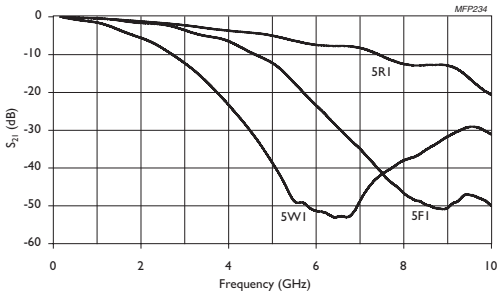

Fig.4 Noise transmission on microstrip transmission lines (sheet 1 mm)

BOBBIN CORES

Type BC13/4.8/16

A_L measured with fully wound bobbin.

GRADE	A_L (nH)	TYPE NUMBER
3C90	50	BC13/4.8/16-3C90 sup

Winding data for BC13/4.8/16

WINDING AREA (mm^2)	AVERAGE LENGTH OF TURN (mm)
38.8	27.3

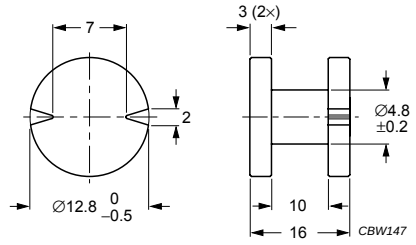

Dimensions in mm.

Fig.1 BC13/4.8/16.

Type BC22/12/14

A_L measured with fully wound bobbin.

GRADE	A_L (nH)	TYPE NUMBER
3C90	86	BC22/12/14-3C90 sup

Winding data for BC22/12/14

WINDING AREA (mm^2)	AVERAGE LENGTH OF TURN (mm)
43.0	53.4

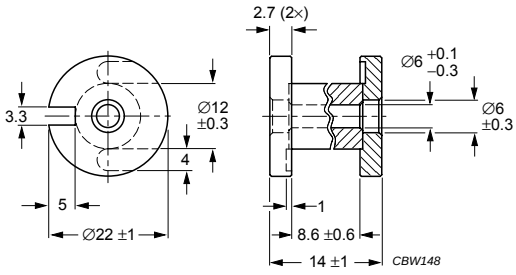

Dimensions in mm.

Fig.2 BC22/12/14.

Type BC22/12/18

A_L measured with fully wound bobbin.

GRADE	A_L (nH)	TYPE NUMBER
3C90	85	BC22/12/18-3C90 sup

Winding data for BC22/12/18

WINDING AREA (mm^2)	AVERAGE LENGTH OF TURN (mm)
63.0	53.4

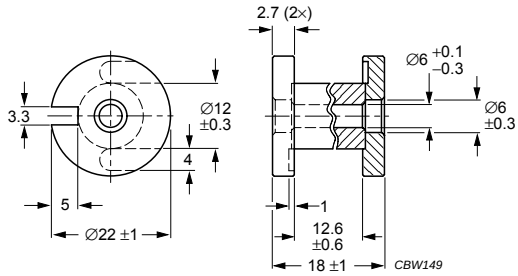

Dimensions in mm.

Fig.3 BC22/12/18.

Type BC22/12/19

A_L measured with fully wound bobbin.

GRADE	A_L(nH)	TYPE NUMBER
3C90	94	BC22/12/19-3C90 sup

Winding data for BC22/12/19

WINDING AREA (mm^2)	AVERAGE LENGTH OF TURN (mm)
52.5	53.4

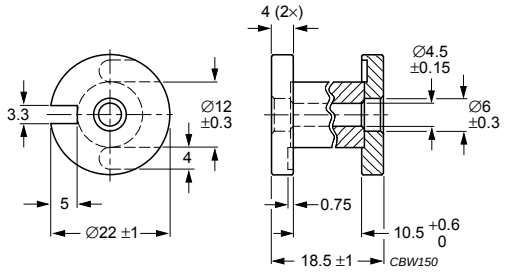

Dimensions in mm.

Fig.4 BC22/12/19.

Type BC22/12/38

A_L measured with fully wound bobbin.

GRADE	A_L(nH)	TYPE NUMBER
3C90	74	BC22/12/38-3C90 sup

Winding data for BC22/12/38

WINDING AREA (mm^2)	AVERAGE LENGTH OF TURN (mm)
150	53.4

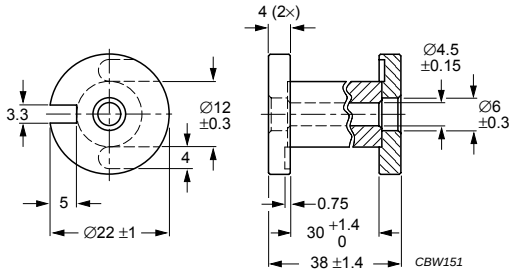

Dimensions in mm.

Fig.5 BC22/12/38.

Type BC23/12/14

A_L measured with fully wound bobbin.

GRADE	A_L(nH)	TYPE NUMBER
3C90	92	BC23/12/14-3C90 sup

Winding data for BC23/12/14

WINDING AREA (mm^2)	AVERAGE LENGTH OF TURN (mm)
45.6	54.3

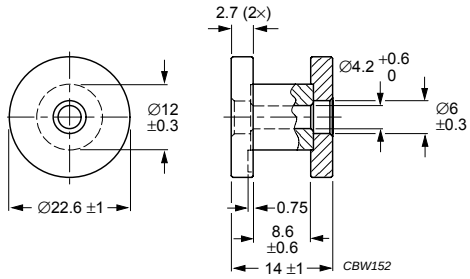

Dimensions in mm.

Fig.6 BC23/12/14.

CABLE SHIELDS FOR EMI-SUPPRESSION

Tubular cable shields

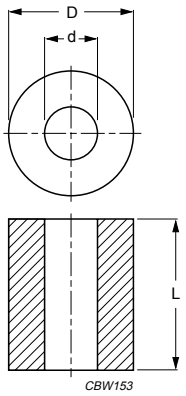

For dimensions see Table 1.

Fig.1 Tubular cable shield.

Table 1 Type numbers, dimensions and parameters; see Fig.1

TYPE NUMBER		DIMENSIONS			$\lvert Z_{typ} \rvert$[1] (Ω) at	
		D	d	L	25 MHz	100 MHz
CST7.8/5.3/9.8-3S4	des	7.8 ±0.2	5.3 +0.3	9.8 ±0.2	33	50
CST8/5.3/10-3S4	des	8 −0.4	5.3 +0.3	10 −0.4	36[2]	50
CST8.3/3.5/10-3S4	des	8.3 −0.4	3.5 +0.3	10 −0.6	70	96
CST9.5/4.8/4.8-4S2	des	9.5 ±0.25	4.75 ±0.25	4.8 ±0.2	18	35
CST9.5/4.8/6.4-4S2	des	9.5 ±0.25	4.75 ±0.25	6.35 ±0.35	23	50
CST9.5/4.8/9.5-4S2	des	9.5 ±0.25	4.75 ±0.15	9.5 ±0.3	40	70
CST9.5/4.8/10-4S2	des	9.5 ±0.25	4.75 ±0.15	10.4 ±0.25	53	80
CST9.5/4.8/13-4S2	des	9.5 ±0.25	4.75 ±0.15	12.7 ±0.5	60	95
CST9.5/4.8/19-4S2	des	9.5 ±0.25	4.75 ±0.15	19.05 ±0.7	100	145
CST9.5/5.1/15-3S4	des	9.5 ±0.3	5.1 ±0.15	14.5 ±0.45	66	110
CST9.5/5.1/15-4S2	des	9.5 ±0.3	5.1 ±0.15	14.5 ±0.45	66	110
CST9.7/5/5.1-4S2	des	9.65 ±0.25	5 ±0.2	5.05 −0.45	26	43
CST14/6.4/5.3-4S2	des	14.3 ±0.45	6.35 ±0.25	5.3 −0.45	35	60
CST14/6.4/10-4S2	des	14.3 ±0.45	6.35 ±0.25	10.1 ±0.4	70	105
CST14/6.4/14-4S2	des	14.3 ±0.45	6.35 ±0.25	13.8 ±0.4	90	150
CST14/6.4/15-4S2	des	14.3 ±0.45	6.35 ±0.25	15 ±0.45	100	170
CST14/6.4/29-4S2	des	14.3 ±0.45	6.35 ±0.25	28.6 ±0.75	170	250
CST14/7.3/29-4S2	des	14.3 ±0.45	7.25 ±0.15	28.6 ±0.75	143	215
CST16/7.9/14-4S2	des	16.25 −0.75	7.9 ±0.25	14.3 ±0.35	70	113
CST16/7.9/29-4S2	des	16.25 −0.75	7.9 ±0.25	28.6 ±0.75	130	213
CST17/9.5/13-3S4	des	17.45 ±0.35	9.53 ±0.25	12.7 ±0.5	55	90
CST17/9.5/13-4S2	des	17.45 ±0.4	9.5 ±0.25	12.7 ±0.5	55	88

TYPE NUMBER		DIMENSIONS			$\lvert Z_{typ} \rvert$[1] (Ω) at	
		D	d	L	25 MHz	100 MHz
CST17/9.5/29-3S4	des	17.45 ±0.35	9.53 ±0.25	28.55 ±0.75	125	200
CST17/9.5/29-4S2	des	17.45 ±0.35	9.53 ±0.25	28.55 ±0.75	125	250
CST17/11/60-3S4	des	17.2 −1.2	11 ±0.5	60 −2.5	200	320
CST19/10/15-4S2	des	19 −0.65	10.15 ±0.25	14.65 −0.75	70	110
CST19/10/29-4S2	des	19 −0.65	10.15 ±0.25	28.6 ±0.75	128	196
CST19/11/12-3S4	des	19 ±0.4	10.6 ±0.3	11.5 ±0.4	50	75
CST26/13/21-4S2	des	25.9 ±0.75	12.8 ±0.25	21.3 ±0.5	110	180
CST26/13/29-4S2	des	25.9 ±0.75	12.8 ±0.25	28.6 ±0.8	145	225
CST29/19/7.5-4S2	des	29 ±0.75	19 ±0.5	7.5 ±0.25	28	47

Note

1. Minimum guaranteed impedance is $\lvert Z \rvert_{typ}$ −20%.
2. At 30 MHz.

Round cable shields (split)

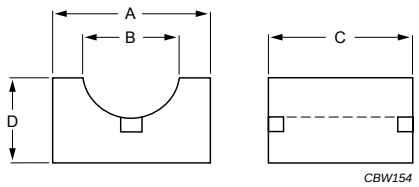

For dimensions see Table 2.

Fig.2 Shield (CSA) outline.

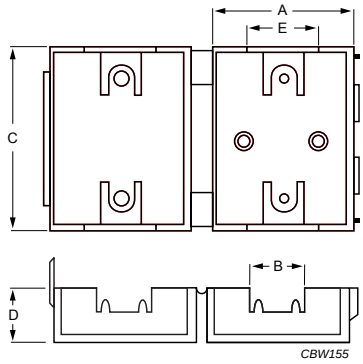

For dimensions see Table 2.

Fig.3 Nylon case.

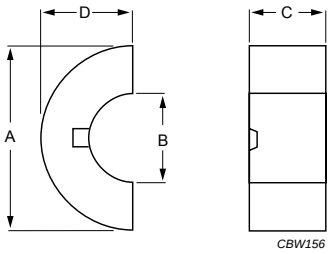

For dimensions see Table 2.

Fig.4 Shield (CSC) outline.

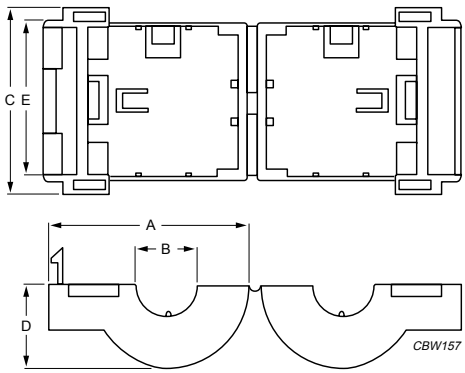

For dimensions see Table 2.

Fig.5 Nylon case.

General data

ITEM	SPECIFICATION
Case material	polyamide (PA66), glass reinforced, flame retardant in accordance with *"UL94V-0"*, grade A82, colour black

Table 2 Type numbers, dimensions and parameters; see Figs 2 to 5

TYPE NUMBER	FIG.	DIMENSIONS					$\lvert Z_{typ} \rvert$[1] (Ω) at	
		A	B	C	D	E	25 MHz	100 MHz
Round cable shields								
CSA15/7.5/29-4S2 des	2	15 ±0.25	6.6 ±0.3	28.6 ±0.8	7.5 ±0.15	–	165	275
CSA19/9.4/29-4S2 des	2	18.65 ±0.4	10.15 ±0.3	28.6 ±0.8	9.4 ±0.15	–	140	225
CSA26/13/29-4S2 des	2	25.9 ±0.5	13.05 ±0.3	28.6 ±0.8	12.8 ±0.25	–	155	250
CSC16/7.9/14-4S2 des	4	15.9 ±0.4	7.9 ±0.3	14.3 ±0.4	7.95 ±0.2	–	50	113
Round cable shields in matching nylon cases								
CSA15/7.5/29-4S2-EN des	2+3	17.9	7.0	32.3	9.2	9.0	165	275
Nylon case	3	17.9	7.0	32.3	9.2	9.0	–	–
CSA19/9.4/29-4S2-EN des	2+3	22.1	10.2	32.3	11.7	9.0	140	225
Nylon case	3	22.1	10.2	32.3	11.7	9.0	–	–
CSA26/13/29-4S2-EN des	2+3	29	13.4	32.5	14.8	18.0	155	250
Nylon case	3	29	13.4	32.5	14.8	18.0	–	–
CSC16/7.9/14-4S2-EN des	4+5	24.7	7.6	22.8	10.2	17.8	50	113
Nylon case	5	24.7	7.6	22.8	10.2	17.8	–	–

Note

1. Minimum guaranteed impedance is $\lvert Z \rvert_{typ}$ −20%.

Flat cable shields (split)

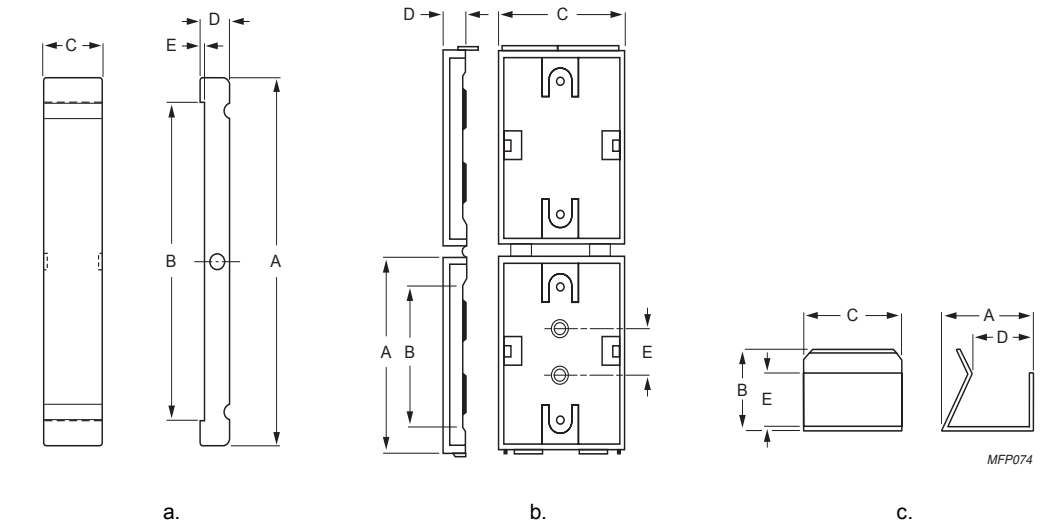

For dimensions see Table 3.

Fig.6 Outlines of flat cable shields (split) and accessories.

General data

ITEM	SPECIFICATION
Case material	polyamide (PA66), glass reinforced, flame retardant in accordance with *"UL94V-0"*, grade A82, colour black
Clip material	spring steel (0.5 mm), zinc plated

Table 3 Type numbers, dimensions and parameters; see Fig.6

TYPE NUMBER	FIG.	DIMENSIONS					$\lvert Z_{typ} \rvert$[1] (Ω) at	
		A	B	C	D	E	25 MHz	100 MHz
Flat cable shields (split)								
CSU45/6.4/29-4S2 des	6a	45.1 ±0.75	34.4 ±0.7	28.6 ±0.7	6.35 ±0.25	0.85 ±0.2	96	225
CSU76/6.4/13-3S4 des	6a	76.2 ±1.5	65.3 ±1.3	12.7 ±0.4	6.35 ±0.25	0.85 ±0.2	36	110
CSU76/6.4/15-3S4 des	6a	76.2 ±1.5	65.3 ±1.3	15.0 ±0.6	6.35 ±0.25	0.85 ±0.2	50	159
CSU76/6.4/29-4S2 des	6a	76.2 ±1.5	65.3 ±1.3	28.6 ±0.8	6.35 ±0.25	0.85 ±0.2	75	215
CSU76/6.4/29-3S4 des	6a	76.2 ±1.5	65.3 ±1.3	28.6 ±0.8	6.35 ±0.25	0.85 ±0.2	70	235
CLI-CSU6.4 des	6c	16.1	11.0	12.7	11.4	8.0	–	–
Flat cable shields in matching nylon cases								
CSU45/6.4/29-4S2-EN des	6a+b	49.5	34.3	32.3	8.1	20	96	225
Nylon case	6b	49.5	34.3	32.3	8.1	20	–	–
CSU76/6.4/29-4S2-EN des	6a+b	80.8	65.5	32.3	8.1	50.8	75	215
Nylon case	6b	80.8	65.5	32.3	8.1	50.8	–	–

Note

1. Minimum guaranteed impedance is $\lvert Z \rvert_{typ}$ −20%.

Flat cable shields

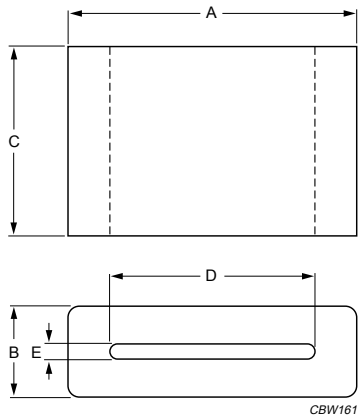

For dimensions see Table 4.

Fig.7 CSF38/12/25 outline.

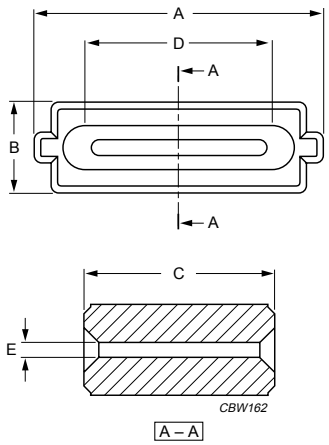

For dimensions see Table 4.

Fig.8 CSF38/12/25-S outline.

Table 4 Type numbers, dimensions and parameters; see Figs 7 and 8

TYPE NUMBER	FIG.	DIMENSIONS					$\lvert Z_{typ} \rvert$[1] (Ω) at	
		A	B	C	D	E	25 MHz	100 MHz
Flat cable shields								
CSF38/12/25-3S4 des	7	38.1 ±1.0	12.1 ±0.35	25.4 ±0.75	26.7 ±0.75	1.9 ±0.35	110	215
CSF38/12/25-3S4-S des	8	38.5 ±0.6	12.1 ±0.4	25.4 ±0.8	26.8 ±0.8	1.9 ±0.4	98	196

Note

1. Minimum guaranteed impedance is $\lvert Z \rvert_{typ}$ −20%.

EMI-SUPPRESSION BEADS

Colour marking: 4S2 has a flash of yellow paint.

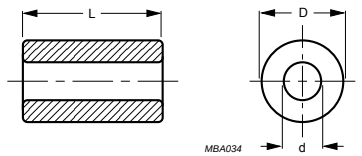

For dimensions see Table 1.

Fig.1 EMI suppression bead.

Note

1. Typical values at 100 MHz, $|Z|_{min}$ is –20%.

Table 1 Grades, parameters and type numbers; see Fig.1

GRADE	$\|Z_{typ}\|$ (Ω)(1) at frequency (MHz)							DIMENSIONS (mm)			TYPE NUMBER
	1	3	10	25	30	100	300	D	d	L	
3S1	24	48	49	–	39	33	29	3 ±0.1	0.7 +0.1	4 ±0.2	BD3/0.7/4-3S1 sup
	41	90	91	–	74	63	55	3 ±0.1	1 +0.1/–0.05	10 ±0.3	BD3/1/10-3S1 sup
	34	65	66	–	53	45	40	5.1 –0.3	0.75 +0.1	4 ±0.2	BD5.1/0.8/4-3S1 sup
	88	156	160	–	113	88	63	5.1 –0.3	0.75 +0.1	10 ±0.3	BD5.1/0.8/10-3S1
	16	28	40	–	33	28	25	5.1 –0.3	1.5 +0.15	4 ±0.2	BD5.1/1.5/4-3S1
	50	90	100	–	80	69	60	5.1 –0.3	1.5 +0.15	10 ±0.3	BD5.1/1.5/10-3S1 sup
	13	23	30	–	25	21	19	5.1 –0.3	2 +0.2	4 ±0.2	BD5.1/2/4-3S1
	36	64	76	–	61	53	46	5.1 –0.3	2 +0.2	10 ±0.3	BD5.1/2/10-3S1 sup
4S2	7	20	35	–	54	69	76	1.9 +0.2	0.8 +0.2	9.75 –0.2	BD1.9/0.8/9.8-4S2 sup
	3	10	28	–	40	63	68	3 ±0.1	0.7 +0.1	4 ±0.2	BD3/0.7/4-4S2
	4	11	23	–	31	48	54	3 ±0.1	1 +0.1/–0.05	4 ±0.2	BD3/1/4-4S2
	9	29	54	–	76	119	134	3 ±0.1	1 +0.1/–0.05	10 ±0.3	BD3/1/10-4S2
	–	–	–	27	–	40	–	3.5 ±0.2	1.3 ±0.1	3.25 ±0.25	BD3.5/1.3/3.3-4S2
	–	–	–	47	–	60	–	3.5 ±0.2	1.3 ±0.1	6 ±0.25	BD3.5/1.3/6-4S2
	–	–	–	89	–	125	–	3.5 ±0.2	1.3 ±0.1	12.7 ±0.35	BD3.5/1.3/13-4S2
	6	19	38	–	55	85	96	5.1 –0.3	0.75 +0.1	4 ±0.2	BD5.1/0.8/4-4S2
	15	50	94	–	138	213	238	5.1 –0.3	0.75 +0.1	10 ±0.3	BD5.1/0.8/10-4S2 sup
	4	13	25	–	34	51	59	5.1 –0.3	1.5 +0.15	4 ±0.2	BD5.1/1.5/4-4S2
	9	31	56	–	85	130	145	5.1 –0.3	1.5 +0.15	10 ±0.3	BD5.1/1.5/10-4S2
	3	10	19	–	25	40	45	5.1 –0.3	2 +0.2	4 ±0.2	BD5.1/2/4-4S2
	–	–	34	–	–	78	–	5.1 –0.3	2 +0.2	7.1 ±0.2	BD5.1/2/7.1-4S2
	8	19	38	–	64	100	111	5.1 –0.3	2 +0.2	10 ±0.3	BD5.1/2/10-4S2 sup
	–	–	–	135	–	200	–	6.35 ±0.15	2.95 +0.45	25.4 ±0.75	BD6.4/3/25-4S2
	–	–	–	63	–	92	–	7.65 –0.25	2.25 +0.25	7.55 ±0.25	BD7.7/2.3/7.6-4S2
	5	18	34	–	48	71	81	8 ±0.2	1.5 +0.15	4 ±0.2	BD8/1.5/4-4S2
	13	43	88	–	116	181	201	8 ±0.2	1.5 +0.15	10 ±0.3	BD8/1.5/10-4S2
	5	13	25	–	39	61	69	8 ±0.2	2 +0.2	4 ±0.2	BD8/2/4-4S2
	11	35	69	–	96	151	168	8 ±0.2	2 +0.2	10 ±0.3	BD8/2/10-4S2
	3	10	19	–	28	43	48	8 ±0.2	3 +0.2	4 ±0.2	BD8/3/4-4S2
	8	25	50	–	69	106	119	8 ±0.2	3 +0.2	10 ±0.3	BD8/3/10-4S2

BEADS ON WIRE FOR EMI-SUPPRESSION

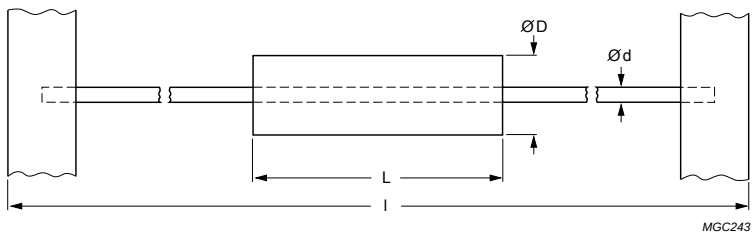

For dimensions, see Table 1.
Wire tin (Sn) plated.
Taping standard in accordance with *"IEC 60286, part 1"* and *"EIA-RS-296-D"*.

Fig.1 Bead on wire.

Table 1 Grades, parameters and type numbers; see Fig.1

GRADE	$\lvert Z_{typ} \rvert$ (Ω)[1] at frequency (MHz)							DIMENSIONS (mm)				TYPE NUMBER
	1	3	10	25	30	100	300	∅D	L	l	∅d	
4S2	4	13	24	–	36	58	65	3.5 ±0.2	3.5 −0.5	64.4	0.64	BDW3.5/3.5-4S2
	5	16	33	–	49	75	88	3.5 ±0.2	4.7 −0.5	64.4	0.64	BDW3.5/4.7-4S2
	–	–	–	54	–	82	–	3.5 ±0.25	5.25 ±0.25	64.4	0.64	BDW3.5/5.3-4S2
	6	21	44	–	66	100	119	3.5 ±0.2	6.0 ±0.25	64.4	0.64	BDW3.5/6-4S2
	8	25	49	–	74	110	131	3.5 ±0.2	6.7 ±0.25	64.4	0.64	BDW3.5/6.7-4S2
	9	28	55	–	84	131	150	3.5 ±0.2	7.6 ±0.35	64.4	0.64	BDW3.5/7.6-4S2
	10	33	65	–	98	146	175	3.5 ±0.2	8.9 ±0.35	64.4	0.64	BDW3.5/8.9-4S2
	–	–	–	96	–	150	–	3.5 ±0.25	9.5 ±0.3	64.4	0.64	BDW3.5/9.5-4S2
	–	–	–	117	–	180	–	3.5 ±0.25	11.4 ±0.4	64.4	0.64	BDW3.5/11-4S2
	–	–	–	143	–	220	–	3.5 ±0.25	13.8 ±0.5	64.4	0.64	BDW3.5/14-4S2

Note

1. Typical values at 25 and 100 MHz, $\lvert Z \rvert_{min}$ is −20%. Other impedance values are for reference only.

MINIATURE BALUN CORES

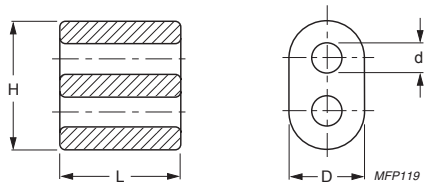

For dimensions see Table 1.

Fig.1 Miniature balun core.

Table 1 Grades, parameters and type numbers, des (applies to all types), see fig. 1

DIMENSIONS (mm)				GRADE	TYPE NUMBER
H	D	L	d		
3.6 – 0.3	2.1 – 0.3	1.4 ± 0.2	0.8 + 0.15	3C11	MHB2-3.6/2.1/1.4-3C11
				4A11	MHB2-3.6/2.1/1.4-4A11
				4B1	MHB2-3.6/2.1/1.4-4B1
3.6 – 0.3	2.1 – 0.3	1.8 ± 0.2	0.8 + 0.15	3C11	MHB2-3.6/2.1/1.8-3C11
				4A11	MHB2-3.6/2.1/1.8-4A11
				4B1	MHB2-3.6/2.1/1.8-4B1
3.6 – 0.3	2.1 – 0.3	2 ± 0.2	0.8 + 0.15	3C11	MHB2-3.6/2.1/2-3C11
				3C90	MHB2-3.6/2.1/2-3C90
				3E25	MHB2-3.6/2.1/2-3E25
				3E7	MHB2-3.6/2.1/2-3E7
				4A11	MHB2-3.6/2.1/2-4A11
				4B1	MHB2-3.6/2.1/2-4B1
				4C65	MHB2-3.6/2.1/2-4C65
3.6 – 0.3	2.1 – 0.3	2.5 ± 0.2	0.8 + 0.15	3C11	MHB2-3.6/2.1/2.5-3C11
				3C90	MHB2-3.6/2.1/2.5-3C90
				4A11	MHB2-3.6/2.1/2.5-4A11
				4B1	MHB2-3.6/2.1/2.5-4B1
3.6 – 0.3	2.1 – 0.3	3 ± 0.2	0.8 + 0.15	3C11	MHB2-3.6/2.1/3-3C11
				3C90	MHB2-3.6/2.1/3-3C90
				3E25	MHB2-3.6/2.1/3-3E25
				4A11	MHB2-3.6/2.1/3-4A11
				4B1	MHB2-3.6/2.1/3-4B1
3.6 – 0.3	2.1 – 0.3	3.5 ± 0.2	0.8 + 0.15	3C11	MHB2-3.6/2.1/3.5-3C11
				4A11	MHB2-3.6/2.1/3.5-4A11
				4B1	MHB2-3.6/2.1/3.5-4B1

DIMENSIONS (mm)				GRADE	TYPE NUMBER
H	D	L	d		
5.1 ± 0.3	3 ± 0.2	2 ± 0.2	1.2 ± 0.1	3C90	MHB2-5/3/2-3C90
				4A11	MHB2-5/3/2-4A11
				4B1	MHB2-5/3/2-4B1
5.1 ± 0.3	3 ± 0.2	3 ± 0.2	1.2 ± 0.1	3C90	MHB2-5/3/3-3C90
				4A11	MHB2-5/3/3-4A11
				4B1	MHB2-5/3/3-4B1
5.1 ± 0.3	3 ± 0.2	4 ± 0.2	1.2 ± 0.1	3C90	MHB2-5/3/4-3C90
				4A11	MHB2-5/3/4-4A11
				4B1	MHB2-5/3/4-4B1
7 ± 0.4	4 ± 0.2	4 ± 0.2	1.8 ± 0.1	3C90	MHB2-7/4/4-3C90
				4A11	MHB2-7/4/4-4A11
				4B1	MHB2-7/4/4-4B1
7 ± 0.4	4 ± 0.2	5 ± 0.2	1.8 ± 0.1	3C90	MHB2-7/4/5-3C90
				4A11	MHB2-7/4/5-4A11
				4B1	MHB2-7/4/5-4B1
7 ± 0.4	4 ± 0.2	6 ± 0.2	1.8 ± 0.1	3C90	MHB2-7/4/6-3C90
				4A11	MHB2-7/4/6-4A11
				4B1	MHB2-7/4/6-4B1
7 ± 0.4	4 ± 0.2	7 ± 0.2	1.8 ± 0.1	4B1	MHB2-7/4/7-4B1

MULTIHOLE CORES

Table 1 MHC2 grades, parameters and type numbers

GRADE	DIMENSIONS (mm)			TYPE NUMBER
	D	d	L	
4B1	5.6 ±0.15	1.5 ±0.15	12 ±0.2	MHC2-5.6/12-4B1
	6.6 −0.6	1.05 +0.3	5 ±0.2	MHC2-6.6/5-4B1

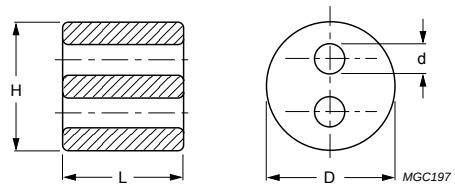

For dimensions see Table 1.

Fig.1 Multihole core circular (MHC2).

Table 2 MHC6 grades, parameters and type numbers

GRADE	DIMENSIONS (mm)			TYPE NUMBER
	D	d	L	
3S4	6 ±0.3	0.7 +0.2	10 ±0.5	MHC6-6/10-3S4
4B1	6 ±0.3	0.7 +0.2	10 ±0.5	MHC6-6/10-4B1 sup
	6 ±0.3	0.7 +0.2	5 −0.2	MHC6-6/5-4B1

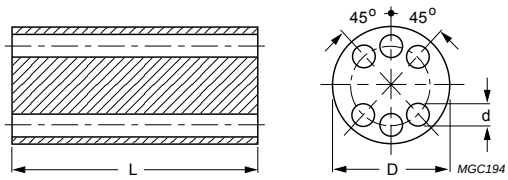

For dimensions see Table 2.

Fig.2 Multihole core circular (MHC6).

Table 3 MHB2 grades, parameters and type numbers

GRADE	DIMENSIONS (mm)				TYPE NUMBER
	D	d	L	H	
4B1	8.5 − 0.5	3.5 +0.5	8 ± 0.3	14 ± 0.5	MHB2-14/8.5/8-4B1 sup
	8.5 − 0.5	3.5 +0.5	14 ± 0.4	14 ± 0.5	MHB2-14/8.5/14-4B1 sup
	8.0 ± 0.3	3 ± 0.3	6 ± 0.3	13 ± 0.3	MHB2-13/8/6-4B1(1)
3C90	8.0 ± 0.3	3 ± 0.3	6 ± 0.3	13 ± 0.3	MHB2-13/8/6-3C90(1)

Note

1. Chamfered holes and sides.

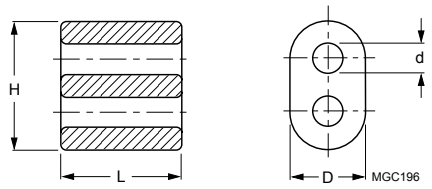

For dimensions see Table 3.

Fig.3 Multihole core binocular (MHB2).

Table 4 MHR2 grades, parameters and type numbers

GRADE	DIMENSIONS (mm)				TYPE NUMBER
	D	d	L	H	
4A11	5.4 ± 0.3	2.0 ± 0.3	10.9 ± 0.4	10.8 ± 0.3	MHR2-11/5.4/11-4A11
3C90	5.4 ± 0.3	2.0 ± 0.3	10.9 ± 0.4	10.8 ± 0.3	MHR2-11/5.4/11-3C90

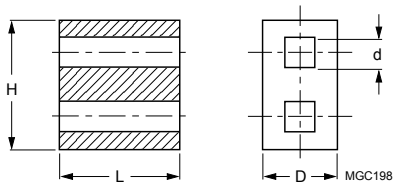

For dimensions see Table 4.

Fig.4 Multihole core rectangular (MHR2).

Table 5 MHR6 grades, parameters and type numbers

GRADE	DIMENSIONS (mm)				TYPE NUMBER
	D	d	L	H	
3B1	4 ±0.2	0.7 +0.3	10 ±0.5	6.1 ±0.3	MHR6-6.1/4/10-3B1

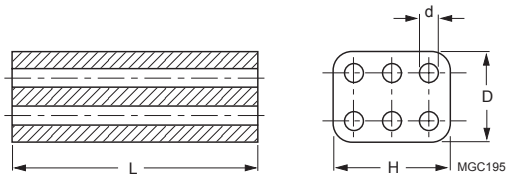

For dimensions see Table 5.

Fig.5 Multihole core rectangular (MHR6).

MULTILAYER INDUCTORS

Our range of multilayer inductors offers magnetic shielding, in five standard sizes (0402, 0603, 0805, 080505 and 1206), which are specially designed for miniaturized electronic products. It offers minimum flux leakage thus eliminating cross talk. They have inductances between 1 nH and 18 mH.

Main applications areas for multilayer inductors are:

- computer and peripheral equipment: mother board, notebook, CD-Rom, DVD-Rom, CD-RW, scanner, hard disc, VGA card, sound card, LCD monitor, printer, PC server thumb drive, PCMCIA card, graphic card, etc.
- network: LAN card, hub, switcher, router set top box, etc.
- telecom: cell phone, ADSL, wired modem, cable modem, ISDN, GPS satellite receiver, etc.
- consumer: walkman, walkdisc, digital still camera (DSC), sound system, HDTV, projector, DVD player, VCD player, tuner for TV, cable modem, etc.

Main high frequency application for multilayer inductor MLH are:

- cell phone, dect phone, wireless LAN card, wireless micro-phone, TV tuner, RF receiver, cable modem, RF amplifier, security remote control, wireless mouse, wireless keyboard pager, set top box.

To help designers in the trial and error process of finding the most suitable component, we offer a sample box with a selection of products.

Ordering code: SAMPLEBOX13

Features

- Monolithic structure for closed magnetic path and high reliability.
- Standard EIA and EIAJ sizes: 0402, 0603, 0805, 080505, 1206.
- This multilayer chip inductor results in magnetic shielding: the absence of leakage flux makes it most suitable for high density mounting.
- Suitable for wave and reflow soldering.
- Plating material lead-free
- Wide range of inductance values.
- Superior physical properties.
- Available in standard EIA and EIAJ tape-and-reel.
- Operating temperature -40ºC to +125ºC.
- 100% sorting out on inductance.Product construction

TYPE NUMBER STRUCTURE

Type numbers for these products consist of the following:

- Product type
- Size
- Inductance
- Tolerance

Product type

MLI: Multilayer Inductor.

MLH: Multilayer inductor High frequency.

Size

0402: 1.0 × 0.5 × 0.5mm
0603: 1.6 × 0.8 × 0.8mm
0805: 2.0 × 1.25 × 0.9mm
080505: 2.0 × 1.25 × 1.25mm
1206: 3.2 × 1.6 × 1.1mm

Inductance values

Expressed in nH or μH
Different ways to indicate the values are used.

EXAMPLES

4N7: 4.7 nH
82N: 82 nH

R10: 0.1 μH
1R8: 1.8 μH

820: 82 μH
151: 150 μH

Tolerance

The last 2 digits represent the tolerance:
05%, 10% or 20%

In MLH '03' the tolerance has the absolute value of ± 0.3 nH.

Multilayer Inductor MLI 0805-R68-10

TYPE	SIZE	INDUCTANCE	TOLERANCE
MLI	0805	0.68 μH	± 10%

Multilayer Inductor High frequency MLH 0402-4N7-03

TYPE	SIZE	INDUCTANCE	TOLERANCE
MLH	0402	4.7 nH	± 0.3 nH

MULTILAYER INDUCTORS

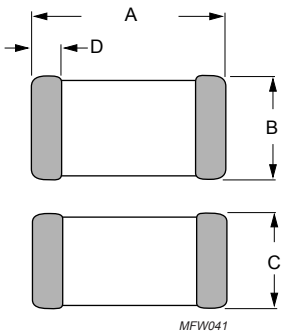

Fig.2 Outline of MLI and MLH.

Product dimensions of Multilayer Inductors MLI

SIZE	A	B	C	D	mass (mg)
0603	1.6 ± 0.15	0.8 ± 0.15	0.8 ± 0.15	0.3 ± 0.20	≈ 5
0805	2.0 ± 0.20	1.25 ± 0.20	0.9 ± 0.20	0.5 ± 0.30	≈ 11
080505	2.0 ± 0.20	1.25 ± 0.20	1.25 ± 0.20	0.5 ± 0.30	≈ 15
1206	3.2 ± 0.20	1.6 ± 0.20	1.1 ± 0.20	0.5 ± 0.30	≈ 28

Product dimensions of Multilayer High frequency Inductors MLH

SIZE	A	B	C	D	mass (mg)
0402	1.0 ± 0.15	0.5 ± 0.15	0.5 ± 0.15	0.25 ± 0.15	≈ 1
0603	1.6 ± 0.15	0.8 ± 0.15	0.8 ± 0.15	0.3 ± 0.20	≈ 5
0805	2.0 ± 0.20	1.25 ± 0.20	0.9 ± 0.20[1]	0.5 ± 0.30	≈ 11

Note: [1]
1.2 ± 0.3 for types with L ≥ 180 nH

Product specifications Multilayer Inductors MLI

SIZE	L (μH)	L tol.	Q min.	L, Q test f (MHz).	SRF min. (MHz).	R_{DC} max. (Ω)	I max. (mA)	TYPE NUMBER
0603	0.047	± 20%	20	50	260	0.3	50	MLI0603-47N-20 des
	0.068	± 20%	20	50	250	0.3	50	MLI0603-68N-20 des
	0.082	± 20%	20	50	245	0.3	50	MLI0603-82N-20 des
	0.1	± 10%	30	25	240	0.3	50	MLI0603-R10-10 des
	0.12	± 10%	30	25	205	0.5	50	MLI0603-R12-10 des
	0.15	± 10%	30	25	180	0.6	50	MLI0603-R15-10 des
	0.18	± 10%	30	25	165	0.6	50	MLI0603-R18-10 des
	0.22	± 10%	30	25	150	0.8	50	MLI0603-R22-10 des
	0.27	± 10%	30	25	136	0.8	50	MLI0603-R27-10 des
	0.33	± 10%	30	25	125	0.85	35	MLI0603-R33-10 des
	0.39	± 10%	30	25	110	1	35	MLI0603-R39-10 des
	0.47	± 10%	30	25	105	1.35	35	MLI0603-R47-10 des
	0.56	± 10%	30	25	95	1.55	35	MLI0603-R56-10 des
	0.68	± 10%	25	25	85	1.7	35	MLI0603-R68-10 des
	0.82	± 10%	30	25	75	2.1	35	MLI0603-R82-10 des
	1.0	± 10%	35	10	65	0.6	25	MLI0603-1R0-10 des
	1.2	± 10%	35	10	60	0.8	25	MLI0603-1R2-10 des
	1.5	± 10%	35	10	55	0.8	25	MLI0603-1R5-10 des
	1.8	± 10%	35	10	50	0.95	25	MLI0603-1R8-10 des
	2.2	± 10%	35	10	50	1.15	15	MLI0603-2R2-10 des
	2.7	± 10%	35	10	40	1.35	15	MLI0603-2R7-10 des
	3.3	± 10%	35	10	38	1.55	15	MLI0603-3R3-10 des
	3.9	± 10%	35	10	36	1.7	15	MLI0603-3R9-10 des
	4.7	± 10%	35	10	33	2.1	15	MLI0603-4R7-10 des
	5.6	± 10%	35	4	22	1.5	5	MLI0603-5R6-10 des
	6.8	± 10%	35	4	20	1.7	5	MLI0603-6R8-10 des
	8.2	± 10%	30	4	18	2.1	15	MLI0603-8R2-10 des
	10	± 10%	20	2	17	2.55	15	MLI0603-100-10 des
0805	0.047	± 20%	20	50	320	0.2	300	MLI0805-47N-20 des
	0.068	± 20%	25	50	280	0.2	300	MLI0805-68N-20 des
	0.082	± 20%	25	50	255	0.2	300	MLI0805-82N-20 des
	0.1	± 10%	30	25	235	0.3	250	MLI0805-R10-10 des
	0.12	± 10%	30	25	220	0.3	250	MLI0805-R12-10 des
	0.15	± 10%	30	25	200	0.4	250	MLI0805-R15-10 des
	0.18	± 10%	30	25	185	0.4	250	MLI0805-R18-10 des
	0.22	± 10%	30	25	170	0.5	250	MLI0805-R22-10 des
	0.27	± 10%	30	25	150	0.5	250	MLI0805-R27-10 des
	0.33	± 10%	30	25	145	0.55	250	MLI0805-R33-10 des
	0.39	± 10%	30	25	135	0.65	250	MLI0805-R39-10 des

SIZE	L (μH)	L tol.	Q min.	L, Q test f (MHz).	SRF min. (MHz).	R_{DC} max. (Ω)	I max. (mA)	TYPE NUMBER
0805	0.47	± 10%	30	25	125	0.65	250	MLI0805-R47-10 des
	0.56	± 10%	30	25	115	0.75	150	MLI0805-R56-10 des
	0.68	± 10%	30	25	105	0.8	150	MLI0805-R68-10 des
	0.82	± 10%	30	25	100	1	150	MLI0805-R82-10 des
	1.0	± 10%	45	10	75	0.45	50	MLI0805-1R0-10 des
	1.2	± 10%	45	10	65	0.5	50	MLI0805-1R2-10 des
	1.5	± 10%	45	10	60	0.5	50	MLI0805-1R5-10 des
	1.8	± 10%	45	10	55	0.6	50	MLI0805-1R8-10 des
	2.2	± 10%	45	10	50	0.65	30	MLI0805-2R2-10 des
080505	2.7	± 10%	45	10	45	0.75	30	MLI080505-2R7-10 des
	3.3	± 10%	45	10	41	0.8	30	MLI080505-3R3-10 des
	3.9	± 10%	45	10	38	0.9	30	MLI080505-3R9-10 des
	4.7	± 10%	45	10	35	1	30	MLI080505-4R7-10 des
	5.6	± 10%	45	4	32	0.9	15	MLI080505-5R6-10 des
	6.8	± 10%	45	4	29	1	15	MLI080505-6R8-10 des
	8.2	± 10%	45	4	26	1.1	15	MLI080505-8R2-10 des
	10	± 10%	45	2	24	1.1	15	MLI080505-100-10 des
	12	± 10%	45	2	22	1.25	15	MLI080505-120-10 des
	15	± 10%	30	1	19	0.8	5	MLI080505-150-10 des
	18	± 10%	30	1	18	0.9	5	MLI080505-180-10 des
1206	0.047	± 20%	30	50	320	0.15	300	MLI1206-47N-20 des
	0.068	± 20%	25	50	280	0.25	300	MLI1206-68N-20 des
	0.1	± 10%	30	25	235	0.25	250	MLI1206-R10-10 des
	0.12	± 10%	30	25	220	0.3	250	MLI1206-R12-10 des
	0.15	± 10%	30	25	200	0.3	250	MLI1206-R15-10 des
	0.18	± 10%	30	25	185	0.4	250	MLI1206-R18-10 des
	0.22	± 10%	30	25	170	0.4	250	MLI1206-R22-10 des
	0.27	± 10%	25	25	150	0.5	250	MLI1206-R27-10 des
	0.33	± 10%	30	25	145	0.6	250	MLI1206-R33-10 des
	0.39	± 10%	30	25	135	0.5	200	MLI1206-R39-10 des
	0.47	± 10%	30	25	125	0.6	200	MLI1206-R47-10 des
	0.56	± 10%	30	25	115	0.7	150	MLI1206-R56-10 des
	0.68	± 10%	30	25	105	0.8	150	MLI1206-R68-10 des
	0.82	± 10%	30	25	100	0.9	150	MLI1206-R82-10 des
	1.0	± 10%	45	10	75	0.4	100	MLI1206-1R0-10 des
	1.2	± 10%	45	10	65	0.5	100	MLI1206-1R2-10 des
	1.5	± 10%	45	10	60	0.5	80	MLI1206-1R5-10 des
	1.8	± 10%	45	10	55	0.5	70	MLI1206-1R8-10 des
	2.2	± 10%	45	10	50	0.6	60	MLI1206-2R2-10 des

SIZE	L (μH)	L tol.	Q min.	L, Q test f (MHz).	SRF min. (MHz).	R_{DC} max. (Ω)	I max. (mA)	TYPE NUMBER
1206	2.7	± 10%	45	10	45	0.6	60	MLI1206-2R7-10 des
	3.3	± 10%	45	10	41	0.7	60	MLI1206-3R3-10 des
	3.9	± 10%	45	10	38	0.8	50	MLI1206-3R9-10 des
	4.7	± 10%	45	10	35	0.9	50	MLI1206-4R7-10 des
	5.6	± 10%	45	4	32	0.7	25	MLI1206-5R6-10 des
	6.8	± 10%	45	4	29	0.8	25	MLI1206-6R8-10 des
	8.2	± 10%	45	4	26	0.9	25	MLI1206-8R2-10 des
	10	± 10%	45	2	24	1	25	MLI1206-100-10 des
	12	± 10%	45	2	22	1.05	15	MLI1206-120-10 des
	15	± 10%	35	1	19	0.7	5	MLI1206-150-10 des
	18	± 10%	35	1	18	0.7	5	MLI1206-180-10 des

- RDC: Resistance of component for DC current.
- Maximum rated current: measure of current capacity of the component. When the maximum rated current is applied, temperature rise shall not exceed 20°C.
- Other tolerances can be provided upon request.
- Operating temperature: -40°C to +125°C.

Product specifications Multilayer High frequency Inductors MLH

SIZE	L (nH) 100 (MHz)	L tol.	Q min 100 (MHz)	Q typ 100 (MHz)	Q typ 800 (MHz)	SRF min. (MHz)	R_{DC} max. (Ω)	I max. (mA)	TYPE NUMBER
0402	1.0	± 0.3	8	9	28	6000	0.10	300	MLH0402-1N0-03 des
	1.2	± 0.3	8	9	28	6000	0.10	300	MLH0402-1N2-03 des
	1.5	± 0.3	8	10	28	6000	0.10	300	MLH0402-1N5-03 des
	1.8	± 0.3	8	10	28	6000	0.10	300	MLH0402-1N8-03 des
	2.2	± 0.3	8	10	29	6000	0.12	300	MLH0402-2N2-03 des
	2.7	± 0.3	8	11	30	6000	0.12	300	MLH0402-2N7-03 des
	3.3	± 0.3	8	11	30	5200	0.15	300	MLH0402-3N3-03 des
	3.9	± 0.3	8	11	31	5150	0.15	300	MLH0402-3N9-03 des
	4.7	± 0.3	8	11	31	4800	0.18	300	MLH0402-4N7-03 des
	5.6	± 0.3	8	11	31	4100	0.20	300	MLH0402-5N6-03 des
	6.8	± 5%	8	11	33	3800	0.25	300	MLH0402-6N8-5 des
	8.2	± 5%	8	12	32	3500	0.25	300	MLH0402-8N2-5 des
	10.0	± 5%	8	12	32	3300	0.30	300	MLH0402-10N-5 des
	12.0	± 5%	8	12	31	2600	0.30	300	MLH0402-12N-5 des
	15.0	± 5%	8	12	30	2300	0.40	300	MLH0402-15N-5 des
	18.0	± 5%	8	12	29	2050	0.50	300	MLH0402-18N-5 des
	22.0	± 5%	8	12	28	1900	0.60	300	MLH0402-22N-5 des
	27.0	± 5%	8	12	27	1700	0.70	300	MLH0402-27N-5 des
	33.0	± 5%	8	10	25	1550	1.5	200	MLH0402-33N-5 des
	39.0	± 5%	8	10	25	1450	1.8	200	MLH0402-39N-5 des
	47.0	± 5%	8	9	22	1300	2.0	200	MLH0402-47N-5 des
	56.0	± 5%	8	10	21	1250	2.0	100	MLH0402-56N-5 des
0603	1.0	± 0.3	8	12	50	6000	0.10	500	MLH0603-1N0-03 des
	1.2	± 0.3	8	13	65	6000	0.10	500	MLH0603-1N2-03 des
	1.5	± 0.3	10	13	47	6000	0.10	500	MLH0603-1N5-03 des
	1.8	± 0.3	10	13	51	6000	0.10	500	MLH0603-1N8-03 des
	2.2	± 0.3	8	13	46	6000	0.10	500	MLH0603-2N2-03 des
	2.7	± 0.3	11	13	45	6000	0.10	500	MLH0603-2N7-03 des
	3.3	± 0.3	11	13	51	5900	0.12	500	MLH0603-3N3-03 des
	3.9	± 0.3	11	13	52	5600	0.14	500	MLH0603-3N9-03 des
	4.7	± 0.3	11	13	41	4800	0.16	500	MLH0603-4N7-03 des
	5.6	± 0.3	11	13	41	4350	0.18	500	MLH0603-5N6-5 des
	6.8	± 5%	11	13	44	3750	0.22	500	MLH0603-6N8-5 des
	8.2	± 5%	11	13	44	3300	0.24	500	MLH0603-8N2-5 des
	10.0	± 5%	11	13	45	2850	0.26	400	MLH0603-10N-5 des
	12.0	± 5%	13	15	46	2500	0.28	400	MLH0603-12N-5 des
	15.0	± 5%	13	15	48	2150	0.32	400	MLH0603-15N-5 des
	18.0	± 5%	13	15	48	2100	0.35	400	MLH0603-18N-5 des
	22.0	± 5%	15	17	45	1850	0.40	400	MLH0603-22N-5 des

SIZE	L (nH) 100 (MHz)	L tol.	Q min 100 (MHz)	Q typ 100 (MHz)	Q typ 800 (MHz)	SRF min. (MHz)	R_{DC} max. (Ω)	I max. (mA)	TYPE NUMBER
603	27.0	± 5%	15	17	43	1680	0.45	400	MLH0603-27N-5 des
	33.0	± 5%	15	18	39	1580	0.55	400	MLH0603-33N-5 des
	39.0	± 5%	15	18	37(1)	1400	0.60	300	MLH0603-39N-5 des
	47.0	± 5%	15	18	35(1)	1200	0.70	300	MLH0603-47N-5 des
	56.0	± 5%	15	18	32(1)	1100	0.75	300	MLH0603-56N-5 des
	68.0	± 5%	15	18	34(1)	1050	0.85	300	MLH0603-68N-5 des
	82.0	± 5%	15	18	32(1)	900	1.0	300	MLH0603-82N-5 des
	100	± 5%	15	18	20(1)	850	1.2	300	MLH0603-R10-5 des
	120	± 5%	8(3)	16(3)	23(2)	680	1.6	250	MLH0603-R12-5 des
	150	± 5%	8(3)	14(3)	23(2)	620	2.0	250	MLH0603-R15-5 des
	180	± 5%	8(3)	14(3)	21(2)	520	2.7	250	MLH0603-R18-5 des
	220	± 5%	8(3)	13(3)	20(2)	500	3.0	200	MLH0603-R22-5 des
0805	1.5	± 0.3	11	13	40	6000	0.10	500	MLH0805-1N5-03 des
	1.8	± 0.3	11	13	45	6000	0.10	500	MLH0805-1N8-03 des
	2.2	± 0.3	11	13	48	6000	0.10	500	MLH0805-2N2-03 des
	2.7	± 0.3	11	13	40	6000	0.10	500	MLH0805-2N7-03 des
	3.3	± 0.3	13	15	56	6000	0.13	500	MLH0805-3N3-03 des
	3.9	± 0.3	13	15	54	5400	0.15	500	MLH0805-3N9-03 des
	4.7	± 0.3	13	15	50	4500	0.20	500	MLH0805-4N7-03 des
	5.6	± 0.3	13	15	53	4000	0.23	500	MLH0805-5N6-03 des
	6.8	± 5%	13	15	51	3650	0.25	500	MLH0805-6N8-5 des
	8.2	± 5%	13	15	53	3000	0.28	500	MLH0805-8N2-5 des
	10.0	± 5%	14	16	45	2500	0.30	500	MLH0805-10N-5 des
	12.0	± 5%	14	16	48	2450	0.35	400	MLH0805-12N-5 des
	15.0	± 5%	15	17	48	2000	0.40	400	MLH0805-15N-5 des
	18.0	± 5%	15	17	43	1750	0.45	400	MLH0805-18N-5 des
	22.0	± 5%	15	17	47	1700	0.50	400	MLH0805-22N-5 des
	27.0	± 5%	16	18	38	1550	0.55	400	MLH0805-27N-5 des
	33.0	± 5%	17	19	35	1350	0.60	400	MLH0805-33N-5 des
	39.0	± 5%	19	21	40	1300	0.65	400	MLH0805-39N-5 des
	47.0	± 5%	19	21	38	1200	0.70	400	MLH0805-47N-5 des
	56.0	± 5%	16	21	31	1150	0.75	400	MLH0805-56N-5 des
	68.0	± 5%	19	21	28	1000	0.80	400	MLH0805-68N-5 des
	82.0	± 5%	20	22	16	850	0.90	400	MLH0805-82N-5 des
	100	± 5%	18	23	-	730	1.0	300	MLH0805-R10-5 des
	120(3)	± 5%	13(3)	22	-	650	1.2	300	MLH0805-R12-5 des
	150(1)	± 5%	13(3)	22	-	550	1.4	300	MLH0805-R15-5 des
	180(1)	± 5%	13(3)	23	-	500	1.8	300	MLH0805-R18-5 des
	220(1)	± 5%	12(1)	20	-	450	1.8	300	MLH0805-R22-5 des

SIZE	L (nH) 100 (MHz)	L tol.	Q min 100 (MHz)	Q typ 100 (MHz)	Q typ 800 (MHz)	SRF min. (MHz)	R_{DC} max. (Ω)	I max. (mA)	TYPE NUMBER
0805	270[1]	± 5%	12[1]	20	-	400	2.5	200	MLH0805-R27-5 des
	330[1]	± 5%	12[1]	22	-	380	3.0	200	MLH0805-R33-5 des
	390[1]	± 5%	10[1]	17	-	330	3.5	200	MLH0805-R39-5 des
	470[1]	± 5%	10[1]	17	-	300	4.0	200	MLH0805-R47-5 des

Note

1. at 500 MHz
2. at 300 MHz
3. at 50 MHz

- RDC: Resistance of component for DC current.
- Maximum rated current: measure of current capacity of the component. When the maximum rated current is applied, temperature rise shall not exceed 20°C.
- Other tolerances can be provided upon request.
- Operating temperature: -40°C to +125°C.

MOUNTING

Soldering profiles

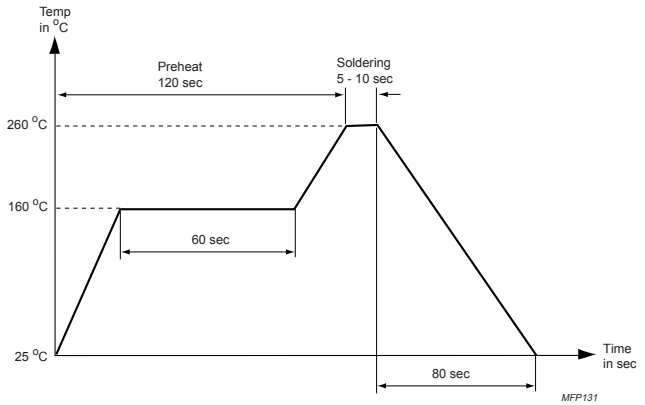

Typical values (solid line).
Process limits (dotted lines).

Fig.3 Reflow soldering.

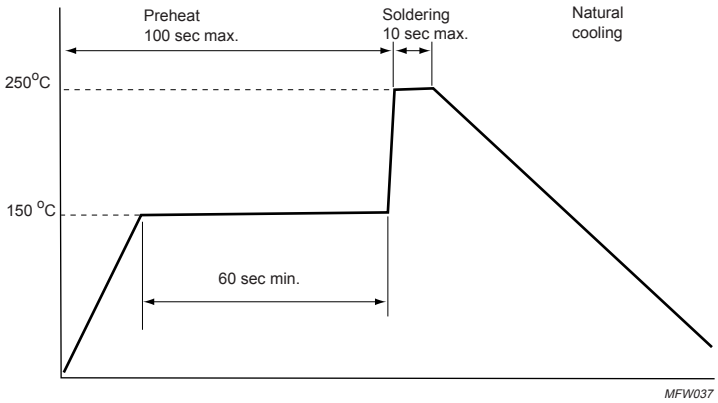

Typical values (solid line).
Process limits (dotted lines).

Fig.4 Double wave soldering.

Dimensions of solderlands

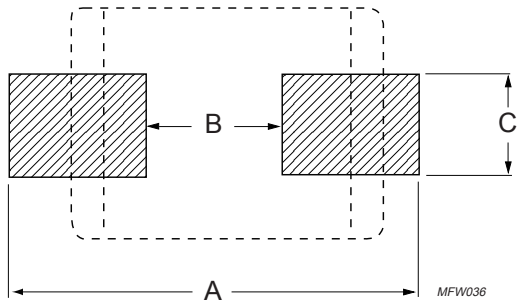

For dimensions see Table 1.

Fig.5 Recommended dimensions of solder lands.

Table 1 Solder land dimensions for MLI and MLH types; see Fig.5

SIZE	FOOTPRINT DIMENSIONS (mm)		
	A	B	C
0402	1.2 – 1.4	0.4	0.4
0603	2.4 – 3.4	0.8	0.6
0805	3.0 – 4.0	1.2	1.0
080505	3.0 – 4.0	1.2	1.0
1206	4.2 – 5.2	2.0	1.2

BLISTER TAPE AND REEL DIMENSIONS

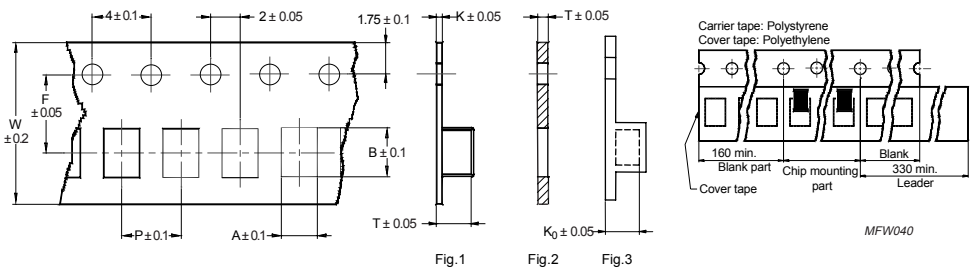

For dimensions see Table 2.

Fig.6 Blister tape.

Table 2 Dimensions of blister tape for relevant product size code; see Fig.6

DIMENSION	PRODUCT SIZE CODE						
	MLH0402	MLI0603	MLH0603	MLI0805	MLH0805	MLI080505	MLI1206
A	0.65	1.1	1.1	1.54	1.42	1.54	1.94
B	1.15	1.9	1.9	2.32	2.25	2.32	3.54
T	0.6	0.95	0.95	1.15	(1)	1.35	1.29
W	8	8	8	8	8	8	8
P	2	4	4	4	4	4	4
F	3.5	3.5	3.5	3.5	3.5	3.5	3.5
K_0	0.6	--	0.95	0.2	0.22	0.2	0.2
Tape fig.	3	2	3	1	3	1	1

Note 1):
K_0 = 1.04 for L < 180 nH
K_0 = 1.4 for L ≥ 180 nH

MATERIAL BLISTER TAPE:

- Sizes 0402 and 0603: paper
- Other sizes: Polystyrene

MATERIAL COVER FILM:

- Polyethylene

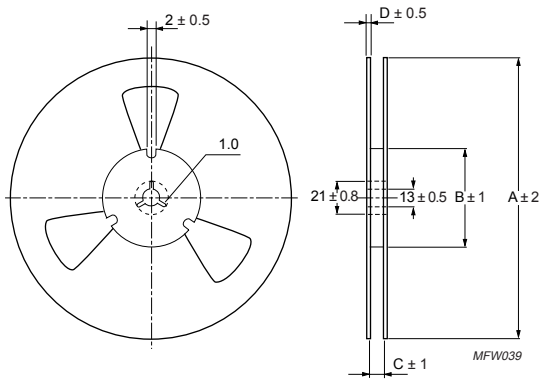

Dimensions in mm.
For dimensions see Table 3.

Fig.7 Reel.

Table 3 Reel dimensions; see Fig.7

DIMENSION	PRODUCT SIZE CODE						
	MLH0402	**MLI0603**	**MLH0603**	**MLI0805**	**MLH0805**	**MLI080505**	**MLI1206**
A	178	178	178	178	178	178	178
B	60	60	60	60	60	60	60
C	12	10	12	10	12	10	10
D	1.5	2	1.5	2	1.5	2	2

Table 4 Packing quantities

	PRODUCT SIZE CODE				
	0402	**0603**	**0805**	**080505**	**1206**
Pcs./reel	10 000	4 000	4 000	3 000	3 000

MULTILAYER SUPPRESSORS

Multilayer suppressors are a powerful solution for EMI/RFI attenuation for electronic equipment. Supplied in seven standard sizes (0402, 0603, 0805, 1206, 1210, 1806 and 1812), they have impedances between 6 and 2 000 Ω at 100 MHz.

When installed in series with signal and/or power circuits, high frequency noise is suppressed. There is no need for ground termination, which makes these devices very suitable for circuits with difficult ground. Typical suppression frequencies range from 10 MHz to 1 000 MHz and rated currents are between 0.1 and 6 A.

Multilayer suppressors are specially designed to reduce noise in low impedance circuits while keeping the signal free from distortion. This is because at the interfering frequencies these components behave as a resistor. The high frequency noise is converted into heat rather than reflected to the source. This dissipation prevents ringing and parasitic oscillations.

These characteristics can be used for many different purposes:

- Absorption of generated noise.
- Filtering and wave-shape correction of digital signals from high speed clock oscillators.
- Prevention of high frequency interference entering circuit electronics.

Features

- Monolithic structure for closed magnetic path and highreliability
- Standard EIA and EIAJ sizes:
  0402, 0603, 0805, 1206, 1210, 1806 and 1812
- High impedance per volume which leads to effective high density circuits
- Suitable for wave and reflow soldering
- Plating material lead-free
- Wide range of impedance values
- Superior physical properties
- Available in standard EIA and EIAJ tape-and-reel
- Operating temperature -40°C to +125°C
- 100% sorting out on impedance

Main applications areas for multilayer suppressors are:

- computer and peripheral equipment: mother board, notebook, CD-Rom, DVD-Rom, CD-RW, scanner, hard disc, VGA card, sound card, LCD monitor, printer, PC server thumb drive, PCMCIA card, graphic card, etc.
- network: LAN card, hub, switcher, router set top box, etc.
- telecom: cell phone, ADSL, wired modem, cable modem, ISDN, GPS satellite receiver, etc.
- consumer: walkman, walkdisc, digital still camera (DSC), sound system, HDTV, projector, DVD player, VCD player, tuner for TV, cable modem, etc.

To help designers in the trial and error process of finding the most suitable suppression component, we offer a sample box with a selection of products.

Ordering code: SAMPLEBOX12

TYPE NUMBER STRUCTURE

Type numbers for these products consist of the following:

- Product type
- Size
- Impedance.

Product type

MLS: Multilayer Suppressor.

MLP: Multilayer Power Beads.

MLN: Multilayer Narrow Band.

Size

0402: 1.0 × 0.5 × 0.5 mm
0603: 1.6 × 0.8 × 0.8 mm
0805: 2.0 × 1.25 × 0.9 mm
1206: 3.2 × 1.6 × 1.1 mm
1210: 3.2 × 2.5 × 1.3 mm
1806: 4.5 × 1.6 × 1.6 mm
1812: 4.5 × 3.2 × 1.5 mm.

Impedance value

Expressed in ohms (Ω)
First two digits are significant figures
Last digit is the number of zeros to follow.

EXAMPLES

600: 60 Ω
101: 100 Ω
121: 120 Ω
151: 150 Ω
301: 300 Ω
102: 1000 Ω

Multilayer Suppressor MLS0603-4S7-600

TYPE	SIZE	INTERNAL CODE	IMPEDANCE
MLS	0603	4S7	60

Multilayer Power Bead MLP0603-121

TYPE	SIZE	IMPEDANCE
MLP	0603	120

Multilayer Narrow Band MLN0603-601

TYPE	SIZE	IMPEDANCE
MLN	0603	600

Standard products are delivered taped on reel and have a tolerance on impedance of 25%.

MULTILAYER SUPPRESSORS

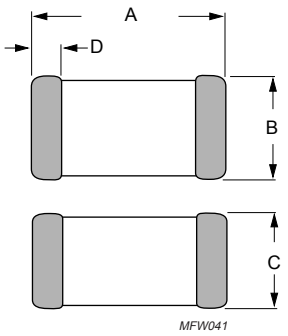

Fig.0 Outline of MLS-MLP-MLN.

Product dimensions of Multilayer Suppressors MLS - MLP - MLN

SIZE	A	B	C	D	mass (mg)
0402	1.0 ± 0.15	0.5 ± 0.15	0.5 ± 0.15	0.25 ± 0.15	≈ 1
0603	1.6 ± 0.20	0.8 ± 0.15	0.8 ± 0.15	0.3 ± 0.20	≈ 5
0805	2.0 ± 0.20	1.25 ± 0.20	0.9 ± 0.20	0.5 ± 0.30	≈ 11
1206	3.2 ± 0.20	1.6 ± 0.20	1.1 ± 0.20	0.5 ± 0.30	≈ 28
1210	3.2 ± 0.20	2.5 ± 0.20	1.3 ± 0.20	0.5 ± 0.30	≈ 50
1806	4.5 ± 0.25	1.6 ± 0.20	1.6 ± 0.20	0.5 ± 0.30	≈ 55
1812	4.5 ± 0.25	3.2 ± 0.20	1.5 ± 0.20	0.5 ± 0.30	≈ 100

Product specifications Multilayer Suppressors MLS

SIZE	$\|Z_{typ}\|$ at 100 MHz (Ω)	R_{DC} MAX. (Ω)	I MAX. (mA)	TYPE NUMBER
0402	6 ± 25%	0.05	500	MLS0402-4S4-060 des
	10 ± 25%	0.05	500	MLS0402-4S4-100 des
	40 ± 25%	0.3	300	MLS0402-4S4-400 des
	80 ± 25%	0.4	200	MLS0402-4S4-800 des
	120 ± 25%	0.5	200	MLS0402-4S4-121 des
	240 ± 25%	0.5	200	MLS0402-4S4-241 des
	480 ± 25%	0.8	100	MLS0402-4S4-481 des
0603	11 ± 25%	0.05	500	MLS0603-4S4-110 des
	19 ± 25%	0.08	500	MLS0603-4S4-190 des
	30 ± 25%	0.1	400	MLS0603-4S7-300 des
	40 ± 25%	0.1	400	MLS0603-4S7-400 des
	60 ± 25%	0.1	300	MLS0603-4S7-600 des
	80 ± 25%	0.15	300	MLS0603-4S7-800 des
	100 ± 25%	0.25	300	MLS0603-4S7-101 des
	120 ± 25%	0.25	300	MLS0603-4S7-121 des
	150 ± 25%	0.3	200	MLS0603-4S7-151 des
	220 ± 25%	0.3	200	MLS0603-4S7-221 des
	300 ± 25%	0.4	200	MLS0603-4S7-301 des
	450 ± 25%	0.5	200	MLS0603-4S7-451 des
	600 ± 25%	0.5	200	MLS0603-4S7-601 des
	750 ± 25%	0.7	200	MLS0603-4S7-751 des
	1000 ± 25%	0.7	200	MLS0603-4S7-102 des
	1500 ± 25%	1	50	MLS0603-4S4-152 des
0805	7 ± 25%	0.1	600	MLS0805-4S4-070 des
	9 ± 25%	0.1	600	MLS0805-4S4-090 des
	11 ± 25%	0.1	600	MLS0805-4S4-110 des
	17 ± 25%	0.1	600	MLS0805-4S4-170 des
	30 ± 25%	0.1	600	MLS0805-4S4-300 des
	60 ± 25%	0.15	500	MLS0805-4S4-600 des
	70 ± 25%	0.15	500	MLS0805-4S7-700 des
	80 ± 25%	0.15	500	MLS0805-4S7-800 des
	120 ± 25%	0.25	300	MLS0805-4S7-121 des
	150 ± 25%	0.25	300	MLS0805-4S7-151 des
	220 ± 25%	0.3	300	MLS0805-4S7-221 des
	300 ± 25%	0.3	300	MLS0805-4S7-301 des
	400 ± 25%	0.3	300	MLS0805-4S7-401 des
	500 ± 25%	0.4	300	MLS0805-4S7-501 des
	600 ± 25%	0.4	300	MLS0805-4S7-601 des
	750 ± 25%	0.5	200	MLS0805-4S4-751 des

SIZE	$\|Z_{typ}\|$ at 100 MHz (Ω)	R_{DC} MAX. (Ω)	I MAX. (mA)	TYPE NUMBER
0805	1000 ± 25%	0.5	200	MLS0805-4S7-102 des
	1500(1) ± 25%	0.6	200	MLS0805-4S7-152 des
	2000 ± 25%	0.8	100	MLS0805-4S4-202 des
1206	19 ± 25%	0.05	600	MLS1206-4S4-190 des
	26 ± 25%	0.05	600	MLS1206-4S4-260 des
	30 ± 25%	0.05	600	MLS1206-4S4-300 des
	50 ± 25%	0.1	500	MLS1206-4S4-500 des
	60 ± 25%	0.1	500	MLS1206-4S4-600 des
	70 ± 25%	0.1	500	MLS1206-4S4-700 des
	90 ± 25%	0.15	500	MLS1206-4S4-900 des
	120 ± 25%	0.15	500	MLS1206-4S4-121 des
	150 ± 25%	0.15	500	MLS1206-4S4-151 des
	200 ± 25%	0.2	400	MLS1206-4S4-201 des
	400 ± 25%	0.2	400	MLS1206-4S4-401 des
	500 ± 25%	0.2	400	MLS1206-4S4-501 des
	600 ± 25%	0.3	400	MLS1206-4S4-601 des
	1000(1) ± 25%	0.4	200	MLS1206-4S7-102 des
	1200(1) ± 25%	0.4	200	MLS1206-4S7-122 des
	2000(2) ± 25%	0.6	200	MLS1206-4S7-202 des
1210	32 ± 25%	0.2	500	MLS1210-4S4-320 des
	60 ± 25%	0.2	500	MLS1210-4S4-600 des
	90 ± 25%	0.2	500	MLS1210-4S4-900 des
1806	50 ± 25%	0.2	600	MLS1806-4S4-500 des
	60 ± 25%	0.2	600	MLS1806-4S4-600 des
	80 ± 25%	0.2	600	MLS1806-4S4-800 des
	100 ± 25%	0.3	500	MLS1806-4S4-101 des
	150 ± 25%	0.3	500	MLS1806-4S4-151 des
	170 ± 25%	0.3	500	MLS1806-4S4-171 des
1812	70 ± 25%	0.3	500	MLS1812-4S4-700 des
	120 ± 25%	0.3	500	MLS1812-4S4-121 des

Note

1. at 50 MHz
2. at 30 MHz

- RDC: Resistance of component for DC current.
- Maximum rated current: measure of current capacity of the component. When the maximum rated current is applied, temperature rise shall not exceed 20°C.
- Standard tolerance on impedance is ±25%.
- Other tolerances can be provided upon request.
- Operating temperature: -40°C to +125°C.

Product specifications Multilayer Power Beads MLP

SIZE	$\|Z_{typ}\|$ at 100 MHz (Ω)	R_{DC} MAX. (Ω)	I MAX. (mA)	TYPE NUMBER
0603	11 ± 25%	0.02	4000	MLP0603-110 des
	25 ± 25%	0.03	3000	MLP0603-250 des
	40 ± 25%	0.035	3000	MLP0603-400 des
	60 ± 25%	0.04	3000	MLP0603-600 des
	120 ± 25%	0.07	1800	MLP0603-121 des
	300 ± 25%	0.14	1500	MLP0603-301 des
	500 ± 25%	0.18	1500	MLP0603-501 des
	600 ± 25%	0.2	1000	MLP0603-601 des
	1000 ± 25%	0.25	800	MLP0603-102 des
0805	11 ± 25%	0.01	6000	MLP0805-110 des
	17 ± 25%	0.02	5000	MLP0805-170 des
	30 ± 25%	0.02	4000	MLP0805-300 des
	60 ± 25%	0.03	3000	MLP0805-600 des
	80 ± 25%	0.04	3000	MLP0805-800 des
	120 ± 25%	0.04	3000	MLP0805-121 des
	200 ± 25%	0.05	2500	MLP0805-201 des
	300 ± 25%	0.08	2000	MLP0805-301 des
	600 ± 25%	0.1	2000	MLP0805-601 des
	1000 ± 25%	0.12	1500	MLP0805-102 des
1206	19 ± 25%	0.015	7000	MLP1206-190 des
	32 ± 25%	0.015	4000	MLP1206-320 des
	50 ± 25%	0.02	4000	MLP1206-500 des
	70 ± 25%	0.025	3000	MLP1206-700 des
	80 ± 25%	0.025	3000	MLP1206-800 des
	100 ± 25%	0.03	2500	MLP1206-101 des
	300 ± 25%	0.06	2000	MLP1206-301 des
	600 ± 25%	0.1	1800	MLP1206-601 des
	1000 (1) ± 25%	0.15	1200	MLP1206-102 des
	1200 (1) ± 25%	0.18	1000	MLP1206-122 des
	1500 (1) ± 25%	0.2	800	MLP1206-152 des
1210	60 ± 25%	0.025	4000	MLP1210-600 des
	90 ± 25%	0.025	3000	MLP1210-900 des
1806	50 ± 25%	0.02	6000	MLP1806-500 des
	60 ± 25%	0.02	5000	MLP1806-600 des
	80 ± 25%	0.025	4000	MLP1806-800 des
	150 ± 25%	0.1	2000	MLP1806-151 des
1812	70 ± 25%	0.03	6000	MLP1812-700 des
	120 ± 25%	0.03	4000	MLP1812-121 des

Product specifications Multilayer Narrow Band MLN

SIZE	$\|Z_{typ}\|$ at 100 MHz (Ω)	R_{DC} MAX. (Ω)	I MAX. (mA)	TYPE NUMBER
0603	6 ± 25%	0.05	500	MLN0603-060 des
	10 ± 25%	0.07	400	MLN0603-100 des
	40 ± 25%	0.30	300	MLN0603-400 des
	80 ± 25%	0.50	300	MLN0603-800 des
	120 ± 25%	0.40	300	MLN0603-121 des
	240 ± 25%	0.60	200	MLN0603-241 des
	300 ± 25%	0.60	200	MLN0603-301 des
	480 ± 25%	0.70	150	MLN0603-481 des
	600 ± 25%	0.60	100	MLN0603-601 des
0805	6 ± 25%	0.07	800	MLN0805-060 des
	11 ± 25%	0.10	700	MLN0805-110 des
	26 ± 25%	0.20	600	MLN0805-260 des
	32 ± 25%	0.20	600	MLN0805-320 des
	60 ± 25%	0.30	500	MLN0805-600 des
	75 ± 25%	0.30	500	MLN0805-750 des
	90 ± 25%	0.30	500	MLN0805-900 des
	120 ± 25%	0.40	400	MLN0805-121 des
	150 ± 25%	0.40	400	MLN0805-151 des
	170 ± 25%	0.50	400	MLN0805-171 des
	220 ± 25%	0.50	300	MLN0805-221 des
	300 ± 25%	0.50	300	MLN0805-301 des
	400 ± 25%	0.60	300	MLN0805-401 des
	500 ± 25%	0.70	200	MLN0805-501 des
	600 ± 25%	0.50	200	MLN0805-601 des
	1000 ± 25%	1.0	100	MLN0805-102 des
	1200 ± 25%	0.70	100	MLN0805-122 des
	1500 ± 25%	0.70	100	MLN0805-152 des
1206	32 ± 25%	0.20	600	MLN1206-320 des
	60 ± 25%	0.30	500	MLN1206-600 des
	80 ± 25%	0.30	500	MLN1206-800 des
	90 ± 25%	0.30	500	MLN1206-900 des
	120 ± 25%	0.40	400	MLN1206-121 des
	150 ± 25%	0.40	400	MLN1206-151 des
	200 ± 25%	0.50	300	MLN1206-201 des
	220 ± 25%	0.30	300	MLN1206-221 des
	350 ± 25%	0.30	300	MLN1206-351 des
	400 ± 25%	0.60	300	MLN1206-401 des
	600 ± 25%	0.80	300	MLN1206-601 des
	1200 ± 25%	1.00	200	MLN1206-122 des

MOUNTING

Soldering profiles

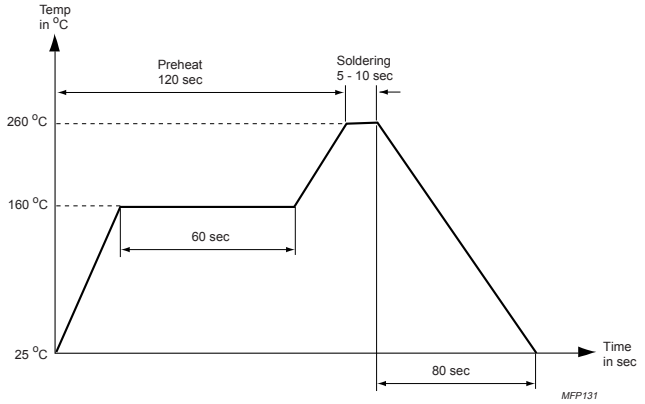

Typical values (solid line).
Process limits (dotted lines).

Fig.1 Reflow soldering.

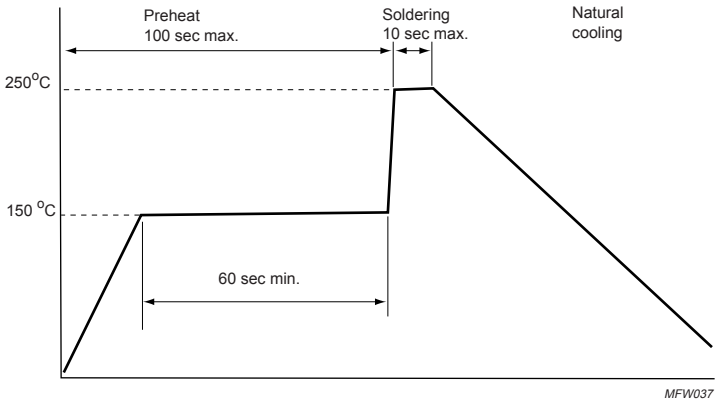

Typical values (solid line).
Process limits (dotted lines).

Fig.2 Double wave soldering.

Dimensions of solderlands

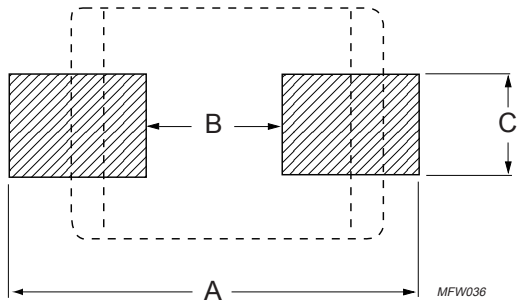

For dimensions see Table 1.

Fig.3 Recommended dimensions of solder lands.

Table 1 Solder land dimensions for MLS, MLP and MLN types; see Fig.3

SIZE	FOOTPRINT DIMENSIONS (mm)		
	A	B	C
0402	1.2 – 1.4	0.4	0.4
0603	2.4 – 3.4	0.8	0.6
0805	3.0 – 4.0	1.2	1.0
1206	4.2 – 5.2	2.0	1.2
1210	5.5 – 6.5	2.0	1.8
1806	5.5 – 6.5	3.0	1.2
1812	5.5 – 6.5	3.0	2.4

BLISTER TAPE AND REEL DIMENSIONS

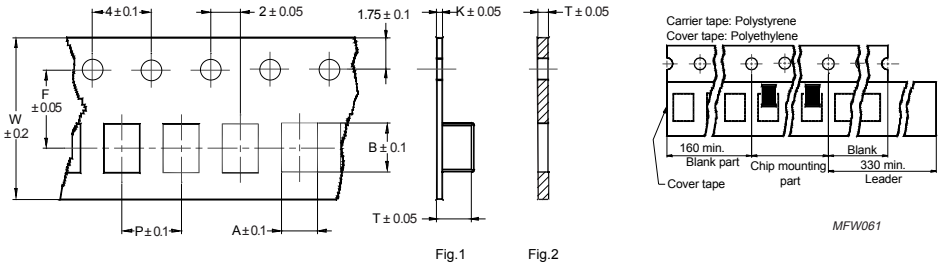

For dimensions see Table 2.

Fig.4 Blister tape.

Table 2 Dimensions of blister tape for relevant product size code; see Fig.4

DIMENSION	PRODUCT SIZE CODE						
	0402	0603	0805	1206	1210	1806	1812
A	0.65	0.975	1.54	1.94	2.80	1.94	3.64
B	1.15	1.8	2.32	3.54	3.42	4.94	4.94
T	0.7	1.05	1.15	1.29	1.64	1.90	1.80
W	8.0	8.0	8.0	8.0	8.0	12	12
P	2.0	4.0	4.0	4.0	4.0	4.0	8.0
F	3.5	3.5	3.5	3.5	3.5	5.5	5.5
K	-	-	0.2	0.2	0.2	0.3	0.3
Tape fig.	2	2	1	1	1	1	1

MATERIAL BLISTER TAPE:

- Sizes 0402 and 0603: paper
- Other sizes: Polystyrene

MATERIAL COVER FILM:

- Polyethylene

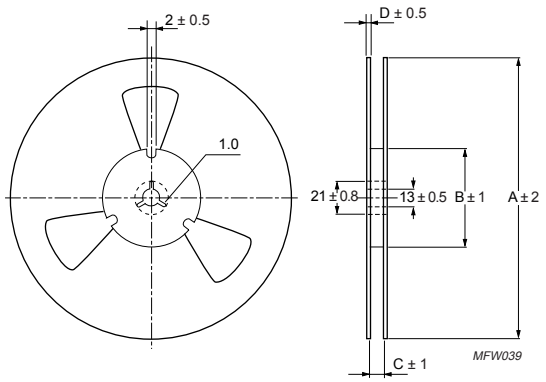

Dimensions in mm.
For dimensions see Table 3.

Fig.5 Reel.

Table 3 Reel dimensions; see Fig.5

DIMENSION	PRODUCT SIZE CODE						
	0402	**0603**	**0805**	**1206**	**1210**	**1806**	**1812**
A	178	178	178	178	178	178	178
B	60	60	60	60	60	60	60
C	10	10	10	10	10	14	14
D	2	2	2	2	2	2	2

Table 4 Packing quantities

	PRODUCT SIZE CODE						
	0402	**0603**	**0805**	**1206**	**1210**	**1806**	**1812**
Pcs./reel	10 000	4 000	4 000	3 000	2 500	2 000	1 000

RODS

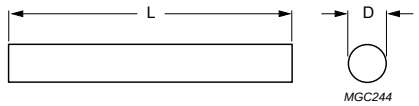

For dimensions see Table 1.

Fig.1 Rod.

Table 1 Grades, parameters and type numbers; see Fig.1

DIMENSIONS (mm)		TYPE NUMBER		
D	**L**	**3B1**	**3S3**	**4B1**
1.6 +0.05	9 ±0.2	ROD1.6/9-3B1-D	–	ROD1.6/9-4B1-D
2 −0.05	20 −0.9	ROD2/20-3B1-D	–	ROD2/20-4B1-D
3 −0.05	15 −0.8	ROD3/15-3B1-D	–	ROD3/15-4B1-D
3 −0.3	20 ±0.4	–	ROD3/20-3S3	–
3 −0.05	20 −0.9	ROD3/20-3B1-D	–	ROD3/20-4B1-D
3 −0.05	25 −1.0	ROD3/25-3B1-D	–	ROD3/25-4B1-D
3.3 ±0.10	17 ±0.3	–	ROD3.3/17-3S3	–
4 −0.05	15 −0.8	ROD4/15-3B1-D	–	ROD4/15-4B1-D
4 −0.05	20 −0.9	ROD4/20-3B1-D	–	ROD4/20-4B1-D
4 −0.05	25 −1.0	ROD4/25-3B1-D	–	ROD4/25-4B1-D
5 −0.30	20 ±0.5	–	ROD5/20-3S3	ROD5/20-4B1
5 −0.05	20 −0.9	ROD5/20-3B1-D	–	ROD5/20-4B1-D
5 −0.30	25 −1.0	–	ROD5/25-3S3	–
5 −0.05	25 −1.0	ROD5/25-3B1-D	–	ROD5/25-4B1-D
5 −0.05	30 −1.2	ROD5/30-3B1-D	–	ROD5/30-4B1-D
5.25 −0.3	18 ±0.3	–	ROD5.3/18-3S3	–
6 −0.30	25 ±0.6	–	ROD6/25-3S3	–
6 −0.30	30 ±0.9	–	ROD6/30-3S3	–
6 −0.10	30 −1.2	ROD6/30-3B1-D	–	ROD6/30-4B1-D
6 −0.10	40 −1.6	ROD6/40-3B1-D	–	ROD6/40-4B1-D
6 −0.10	50 ±1.0	ROD6/50-3B1-D	–	ROD6/50-4B1-D
6.5 −0.30	25 ±0.6	–	ROD6.5/25-3S3	ROD6.5/25-4B1
8 −0.5	25 ±0.75	–	ROD8/25-3S3	–
8 −0.5	32 −2	–	ROD8/32-3S3	ROD8/32-4B1
8 −0.40	50 ±1.0	ROD8/50-3B1	–	ROD8/50-4B1
8 −0.40	150 ±3	ROD8/150-3B1	–	ROD8/150-4B1
8 −0.40	200 ±4	ROD8/200-3B1	–	ROD8/200-4B1
10 −0.50	200 ±4	ROD10/200-3B1	–	ROD10/200-4B1

SMD BEADS FOR EMI SUPPRESSION

General data

ITEM	SPECIFICATION
Strip material	copper (Cu), tin (Sn) plated
Solderability	*"IEC 60068-2-58"*, Part 2, Test Ta, method 1
Taping method	*"IEC 60286-3"* , *"EIA 481-1"* and *"EIA 481-2"*

Grades, parameters and type numbers

GRADE	$\|Z_{typ}\|$ (1) (Ω)	at f (MHz)	TYPE NUMBER
BDS 3/1.8/5.3; mass ≈0.1 g (2)			
3S1	28	10	BDS 3/1.8/5.3-3S1
	33	25	
	25	100	
4S2	25	25	BDS 3/1.8/5.3-4S2
	38	100	
	45	300	
BDS 3/3/4.6; mass ≈0.15 g (2)			
3S1	25	3	BDS3/3/4.6-3S1
	45	10	
	35	25	
4S2	30	25	BDS3/3/4.6-4S2
	50	100	
	55	300	
BDS 3/3/8.9; mass ≈0.3 g (3)			
3S1	55	3	BDS 3/3/8.9-3S1
	80	10	
	55	25	
4S2	65	25	BDS 3/3/8.9-4S2
	100	100	
	110	300	
BDS 4.6/3/8.9; mass ≈0.5 g (3)			
4S2	65	25	BDS 4.6/3/8.9-4S2
	100	100	
	110	300	

Note

1. Typical values, $|Z|_{min}$ is −20%.
2. DC resistance <0.6 mΩ.
3. DC resistance <1.0 mΩ

Mechanical data

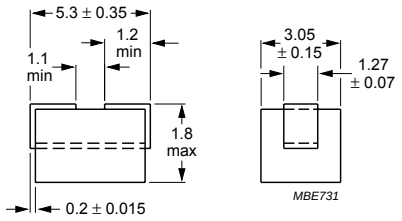

Dimensions in mm.

Fig.1 BDS 3/1.8/5.3.

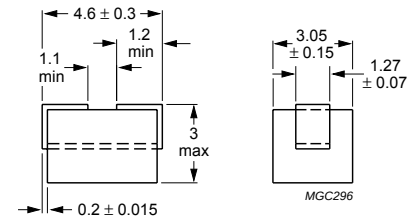

Dimensions in mm.

Fig.2 BDS 3/3/4.6.

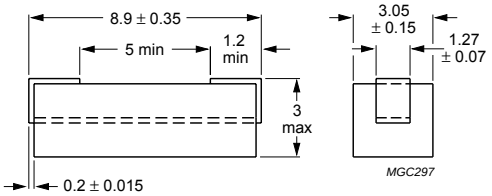

Dimensions in mm.

Fig.3 BDS 3/3/8.9.

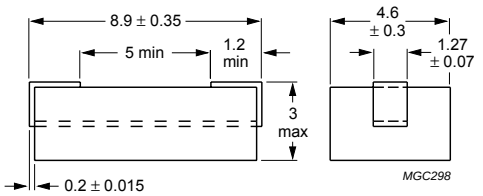

Dimensions in mm.

Fig.4 BDS 4.6/3/8.9.

RECOMMENDED DIMENSIONS OF SOLDER LANDS

Table 1 Reflow soldering

SIZE	DIMENSIONS (mm)			
	A	B	C	D
BDS 3/1.8/5.3	2.8	7.2	2.2	3.3
BDS 3/3/4.6	2.8	6.4	1.8	3.3
BDS 3/3/8.9	7.0	10.8	1.9	3.3
BDS 4.6/3/8.9	7.0	10.8	1.9	3.3

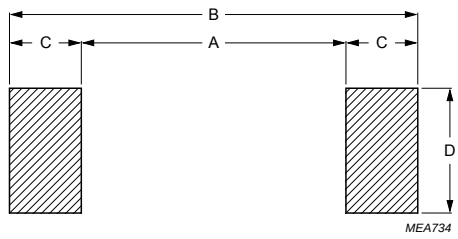

For dimensions see Table 1.

Dimensions of solder lands are based on a solder paste layer thickness of approximately 200 μm (≈0.7 mg solder paste per mm^2).

Fig.5 Reflow and vapour phase soldering.

Table 2 Wave soldering

SIZE	DIMENSIONS (mm)				
	A	B	C	D	E
BDS 3/1.8/5.3	2.0	7.2	2.6	3.0	0.8
BDS 3/3/4.6	2.0	6.4	2.2	3.0	0.8
BDS 3/3/8.9	6.0	12.2	3.1	3.0	2.5
BDS 4.6/3/8.9	6.0	12.2	3.1	3.0	2.5

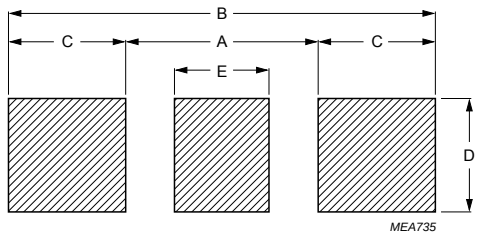

For dimensions see Table 2.

Fig.6 Wave soldering.

Soldering profiles

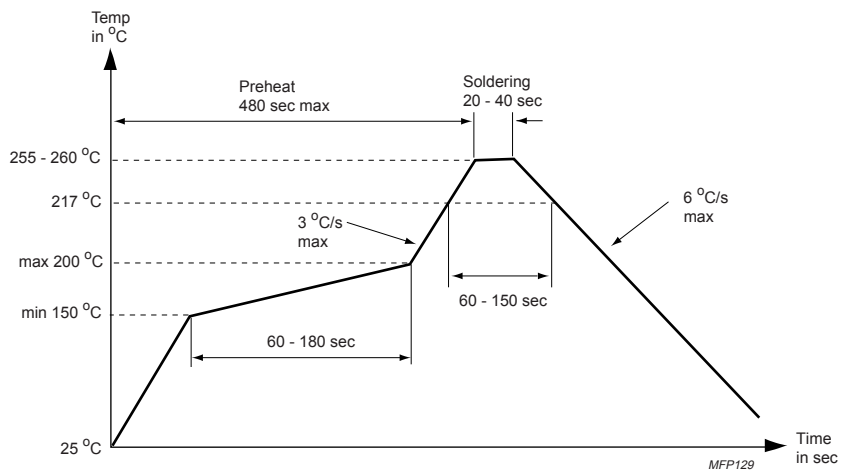

Fig.7 Reflow soldering.

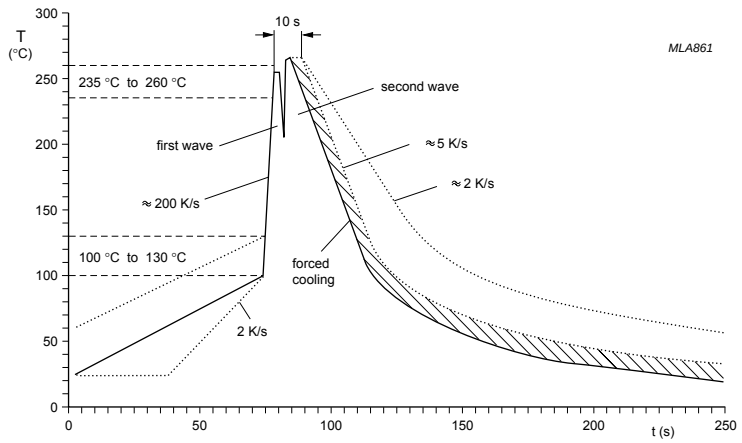

Typical values (solid line).
Process limits (dotted lines).

Fig.8 Double wave soldering.

BLISTER TAPE AND REEL DIMENSIONS

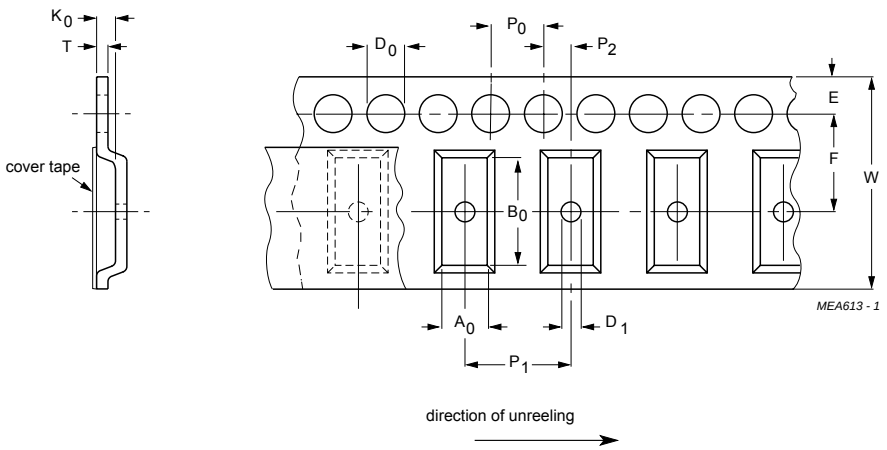

For dimensions see Table 3.

Fig.9 Blister tape.

Table 3 Physical dimensions of blister tape; see Fig.9

SIZE	DIMENSIONS (mm)			
	BDS3/1.8/5.3	**BDS3/3/4.6**	**BDS3/3/8.9**	**BDS4.6/3/8.9**
A_0	3.25 ±0.1	3.45 ±0.1	3.45 ±0.1	5.1 ±0.1
B_0	5.85 ±0.1	5.1 ±0.1	9.4 ±0.1	9.4 ±0.1
K_0	2.0 ±0.1	3.1 ±0.1	3.1 ±0.1	3.1 ±0.1
T	0.3 ±0.05	0.25 ±10%	0.35 ±0.05	0.3 ±0.05
W	12.0 ±0.3	12.0 ±0.3	16.0 ±0.3	16.0 ±0.3
E	1.75 ±0.1	1.75 ±0.1	1.75 ±0.1	1.75 ±0.1
F	5.5 ±0.05	5.5 ±0.05	7.5 ±0.1	7.5 ±0.1
D_0	1.5 +0.1	1.5 +0.1	1.5 +0.1	1.5 +0.1
D_1	≥1.5	≥1.5	≥1.5	≥1.5
P_0	4.0 ±0.1	4.0 ±0.1	4.0 ±0.1	4.0 ±0.1
P_1	8.0 ±0.1	8.0 ±0.1	8.0 ±0.1	8.0 ±0.1
P_2	2.0 ±0.1	2.0 ±0.05	2.0 ±0.1	2.0 ±0.1

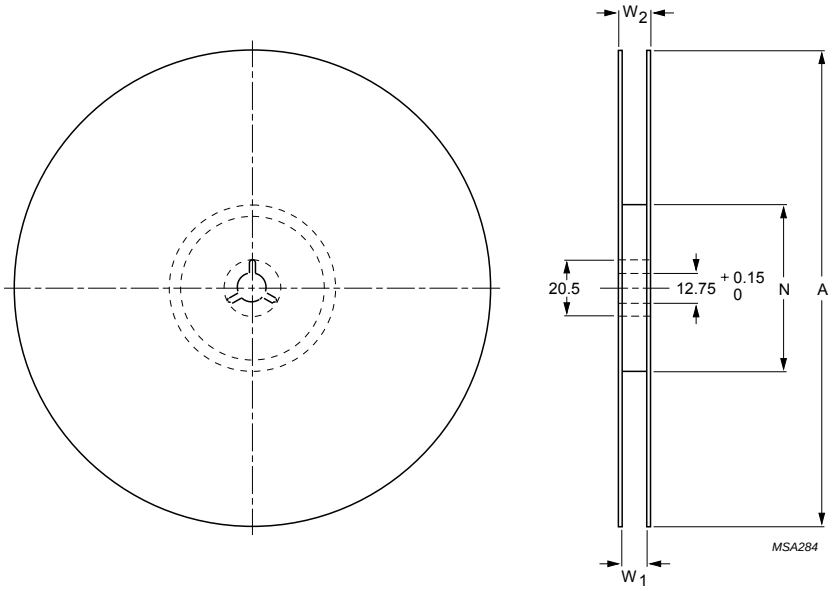

Dimensions in mm.
For dimensions see Table 4.

Fig.10 Reel.

Table 4 Reel dimensions; see Fig.10

SIZE	DIMENSIONS (mm)			
	A	N	W_1	W_2
12	330	100 ±5	12.4	≤16.4
16	330	100 ±5	16.4	≤20.4

SMD COMMON MODE CHOKES FOR EMI-SUPPRESSION

General data

ITEM	SPECIFICATION
Strip material	copper (Cu), tin (Sn) plated
Solderability	*"IEC 60068-2-58"*, Part 2, Test Ta, method 1
Taping method	*"IEC 60286-3"* , *"EIA 481-1-A"* and *"EIA 481-2"*

Grades, parameters and type numbers

GRADE	$\|Z_{typ}\|$(1) (Ω)	at f (MHz)	TYPE NUMBER
CMS2-5.6/3/4.8; mass ≈0.3 g			
4S2	21	25	CMS2-5.6/3/4.8-4S2
	35	100	
	50	300	
CMS2-5.6/3/8.9; mass ≈0.6 g			
4S2	38	25	CMS2-5.6/3/8.9-4S2
	60	100	

GRADE	$\|Z_{typ}\|$(1) (Ω)	at f (MHz)	TYPE NUMBER
CMS4-11/3/4.8; mass ≈0.6 g			
4S2 inner channel	12	25	CMS4-11/3/4.8-4S2
	23	100	
	42	300	
4S2 outer channel	15	25	
	30	100	
	50	300	
CMS4-11/3/8.9; mass ≈1.1 g			
4S2 inner channel	23	25	CMS4-11/3/8.9-4S2
	45	100	
	82	300	
4S2 outer channel	27	25	
	58	100	
	97	300	

Note

1. Typical values, $|Z|_{min}$ is –20%.
   DC resistance <0.6 mΩ.

Mechanical data

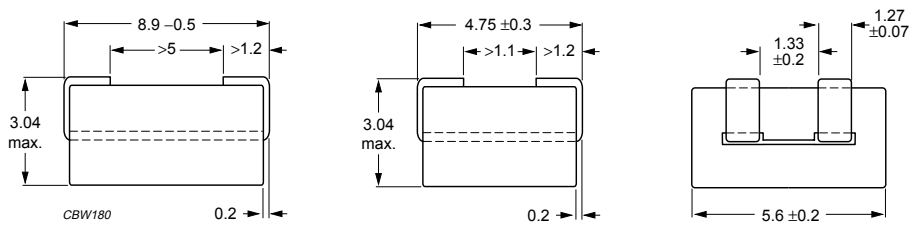

a. CMS2-5.6/3/8.9 (side view). b. CMS2-5.6/3/4.8 (side view). Front view (a and b).

Dimensions in mm.

Fig.1 CMS2-5.6/3/4.8 and CMS2-5.6/3/8.9.

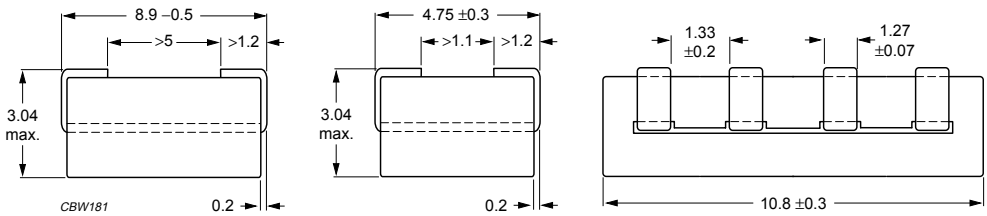

a. CMS4-11/3/8.9 (side view). b. CMS4-11/3/4.8 (side view). Front view (a and b).

Dimensions in mm.

Fig.2 CMS4-11/3/4.8 and CMS4-11/3/8.9.

Recommended dimensions of solder lands

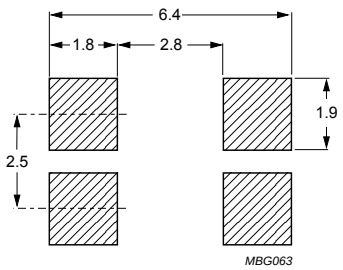

Dimensions in mm.

Dimensions of solder lands are based on a solder paste layer thickness of approximately 200 μm (≈0.7 mg solder paste per mm²).

Fig.3 Solder lands for reflow soldering of CMS2-5.6/3/4.8.

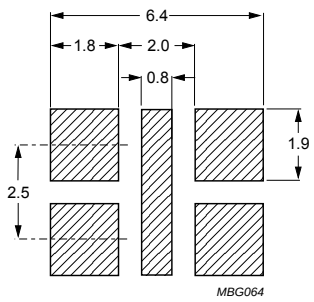

Dimensions in mm.

Fig.4 Solder lands for wave soldering of CMS2-5.6/3/4.8.

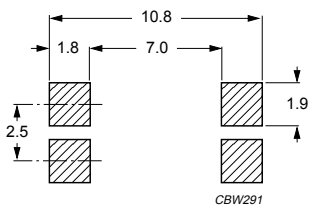

Dimensions in mm.

Dimensions of solder lands are based on a solder paste layer thickness of approximately 200 μm (≈0.7 mg solder paste per mm²).

Fig.5 Solder lands for reflow soldering of CMS2-5.6/3/8.9.

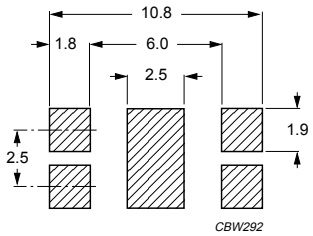

Dimensions in mm.

Fig.6 Solder lands for wave soldering of CMS2-5.6/3/8.9.

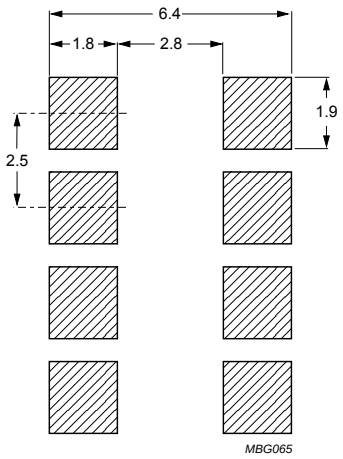

Dimensions in mm.

Dimensions of solder lands are based on a solder paste layer thickness of approximately 200 μm (≈0.7 mg solder paste per mm²).

Fig.7 Solder lands for reflow soldering of CMS4-11/3/4.8.

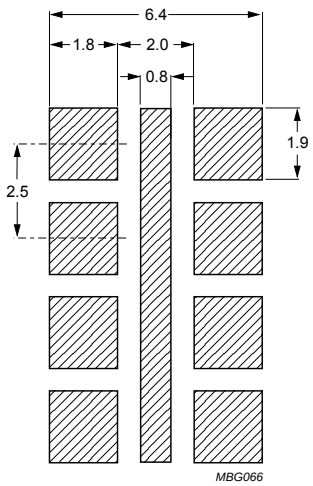

Dimensions in mm.

Fig.8 Solder lands for wave soldering of CMS4-11/3/4.8.

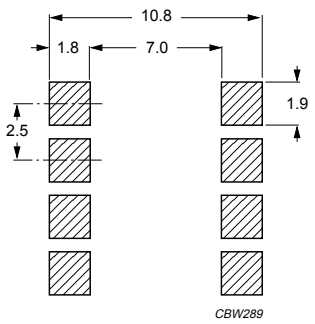

Dimensions in mm.

Dimensions of solder lands are based on a solder paste layer thickness of approximately 200 μm (≈0.7 mg solder paste per mm^2).

Fig.9 Solder lands for reflow soldering of CMS4-11/3/8.9.

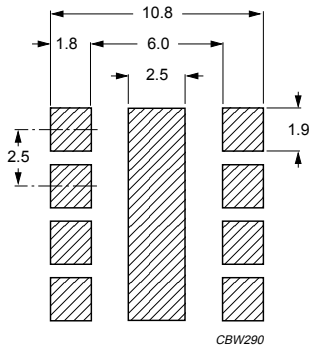

Dimensions in mm.

Fig.10 Solder lands for wave soldering of CMS4-11/3/8.9.

Soldering profiles

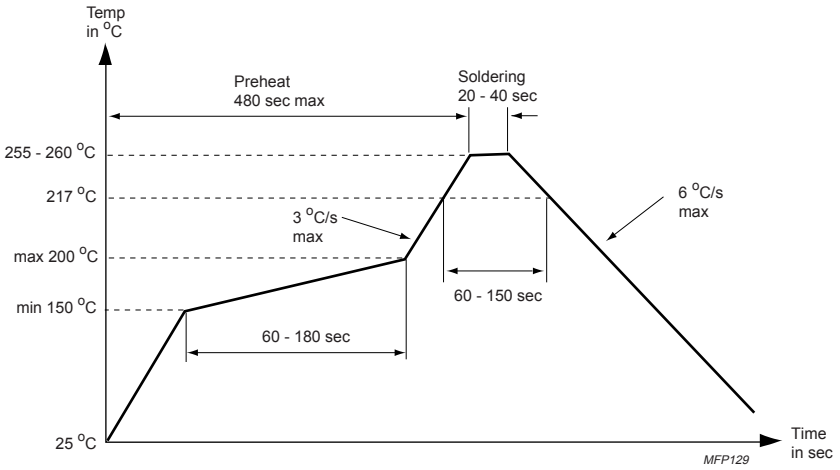

Fig.11 Reflow soldering.

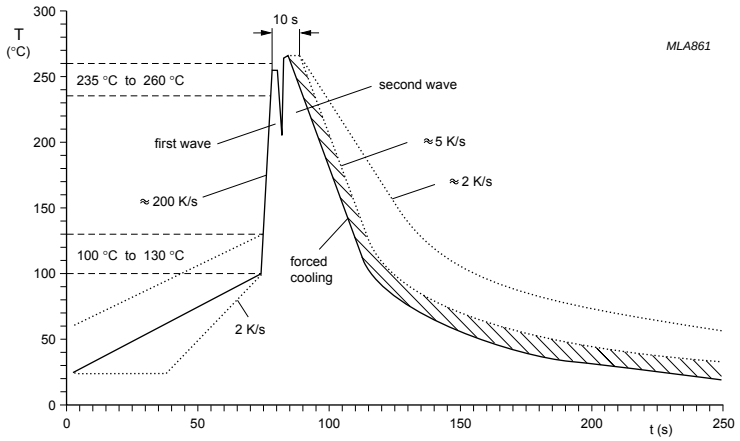

Typical values (solid line).
Process limits (dotted lines).

Fig.12 Double wave soldering.

BLISTER TAPE AND REEL DIMENSIONS

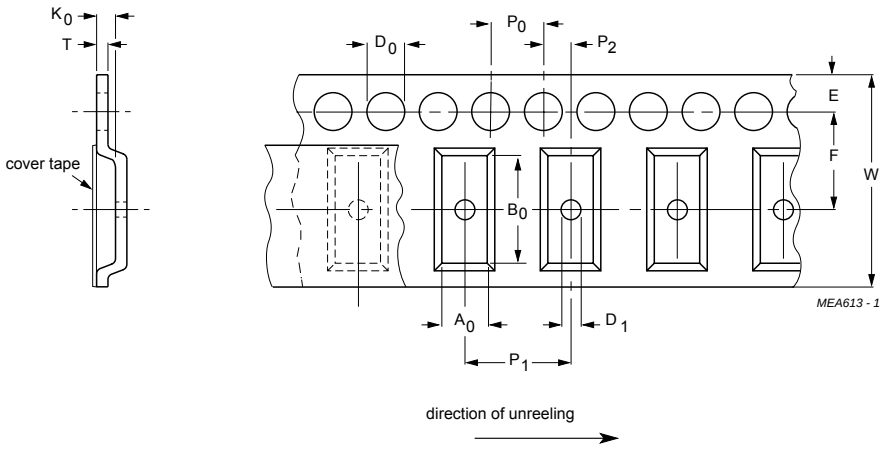

For dimensions see Table 1.

Fig.13 Blister tape.

Table 1 Physical dimensions of blister tape; see Fig.13

SIZE	DIMENSIONS (mm)			
	CMS2-5.6/3/4.8	CMS2-5.6/3/8.9	CMS2-5.6/3/8.9	CMS4-11/3/8.9
A_0	5.26	5.99	5.23	10.13
B_0	6.07	9.09	11.18	11.56
K_0	3.18	3.18	4.5	4.5
T	0.3	0.33	0.34	0.36
W	12	16	24	24
E	1.75	1.75	1.75	1.75
F	5.5	7.5	11.75	11.5
D_0	1.5	1.5	1.5	1.5
D_1	≥1.5	≥1.5	≥1.5	≥1.5
P_0	4.0	4.0	4.0	4.0
P_1	8.0	8.0	8.0	16.0
P_2	2.0	2.0	2.0	2.0

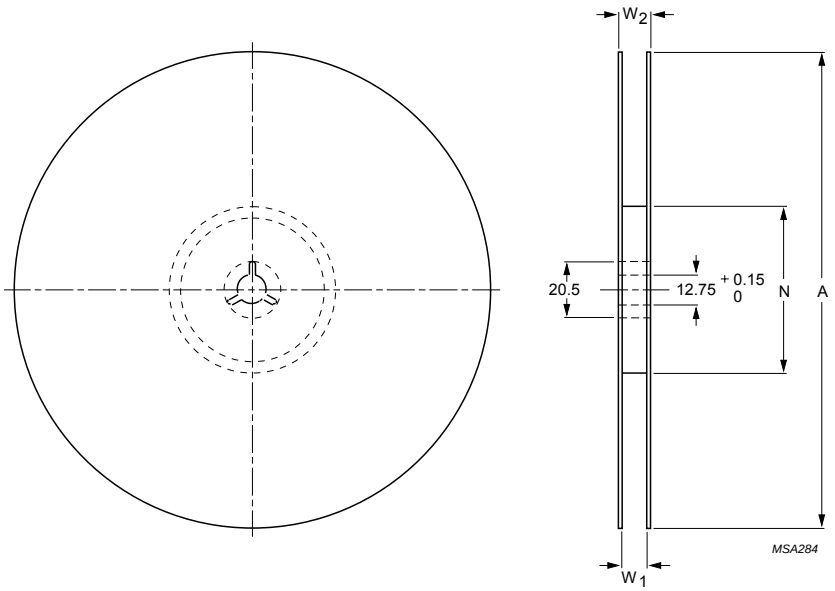

Dimensions in mm.
For dimensions see Table 2.

Fig.14 Reel.

Table 2 Reel dimensions; see Fig.14

SIZE	DIMENSIONS (mm)			
	A	N	W_1	W_2
12	330	100 ±5	12.4	≤16.4
16	330	100 ±5	16.4	≤20.4
24	330	100 ±5	24.4	≤28.4

SMD WIDEBAND CHOKES

SMD wideband choke WBS1.5-5/4.8/10

ITEM	SPECIFICATION
Strip material	copper (Cu), tin (Sn) plated
Solderability	*"IEC 60068-2-58"*, Part 2, Test Ta, method 1
Mass	≈0.9 g
Taping method	*"IEC 60286-3"* and *"EIA 481-2"*

Grades, parameters and type numbers; see Fig.1

GRADE	$\lvert Z_{typ} \rvert$[1] (Ω)	at f (MHz)	TYPE NUMBER
3S4	230	10	WBS1.5-5/4.8/10-3S4
	400	50	
	430	100	
4B1	275	25	WBS1.5-5/4.8/10-4B1
	500	100	
	350	300	

Note

1. Typical values, $\lvert Z \rvert_{min}$ is –20%.

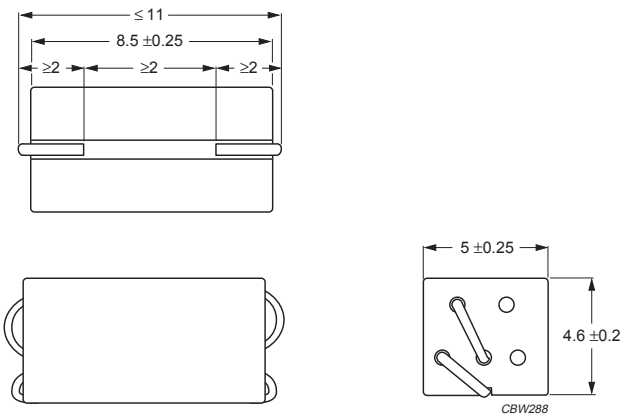

Dimensions in mm.

Fig.1 WBS1.5-5/4.8/10.

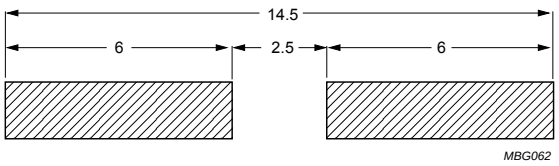

Dimensions of solder lands are based on a solder paste layer thickness of approximately 200 μm (≈0.7 mg solder paste per mm^2).

Fig.2 Solder lands for reflow soldering of WBS1.5-5/4.8/10.

SMD wideband choke WBS2.5-5/4.8/10

ITEM	SPECIFICATION
Strip material	copper (Cu), tin (Sn) plated
Solderability	*"IEC 60068-2-58"*, Part 2, Test Ta, method 1
Mass	≈0.9 g
Taping method	*"IEC 60286-3"* and *"EIA 481-2"*

Grades, parameters and type numbers; see Fig.3

GRADE	$\lvert Z_{typ} \rvert$[1] (Ω)	at f (MHz)	TYPE NUMBER
3S4	300	10	WBS2.5-5/4.8/10-3S4
	625	50	
	600	100	
4B1	485	25	WBS2.5-5/4.8/10-4B1
	850	100	
	350	300	

Note

1. Typical values, $\lvert Z \rvert_{min}$ is –20%.

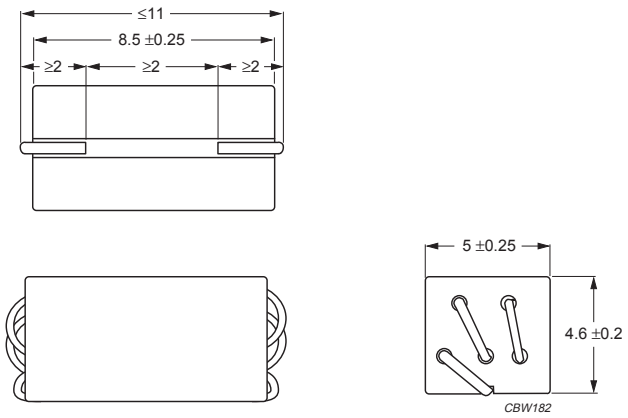

Dimensions in mm.

Fig.3 WBS2.5-5/4.8/10.

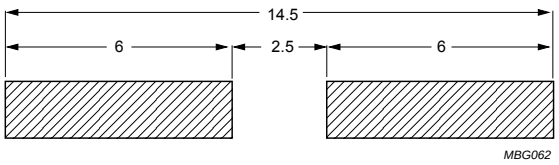

Dimensions of solder lands are based on a solder paste layer thickness of approximately 200 μm (≈0.7 mg solder paste per mm^2).

Fig.4 Solder lands for reflow soldering of WBS2.5-5/4.8/10.

Soldering profiles

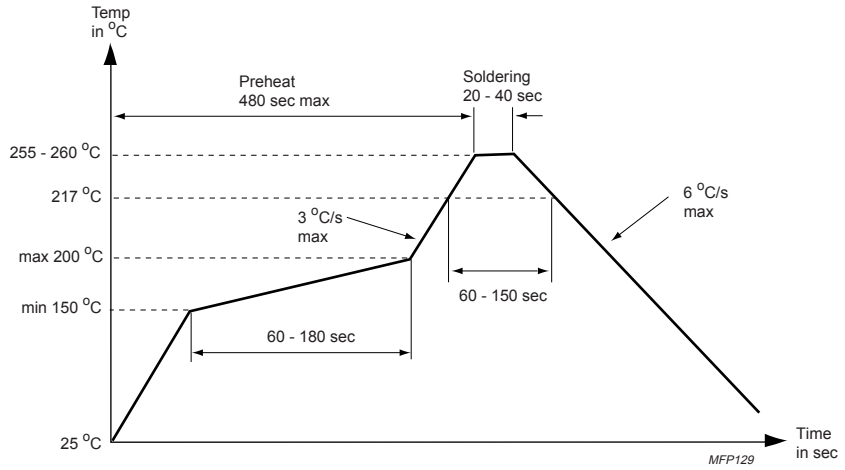

Fig.5 Reflow soldering.

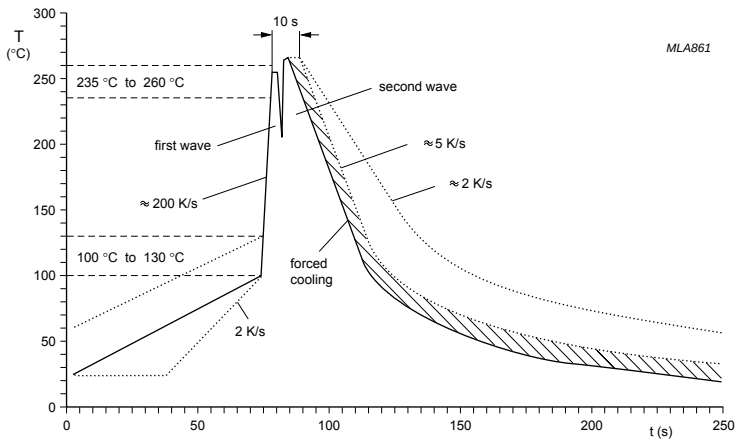

Typical values (solid line).
Process limits (dotted lines).

Fig.6 Double wave soldering.

BLISTER TAPE AND REEL DIMENSIONS

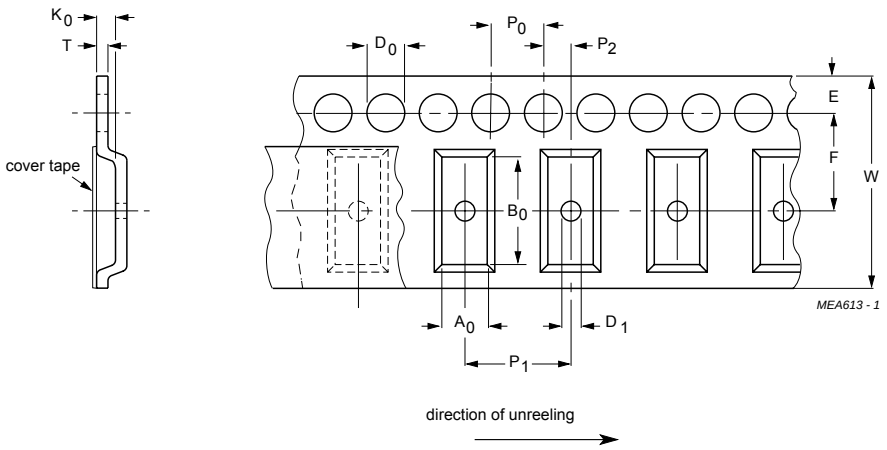

For dimensions see Table 1.

Fig.7 Blister tape.

Table 1 Physical dimensions of blister tape; see Fig.7

SIZE	DIMENSIONS (mm)	
	WBS1.5-5/4.8/10	**WBS2.5-5/4.8/10**
A_0	5.51	5.51
B_0	11	11
K_0	5.03	5.03
T	0.36	0.36
W	24	24
E	1.75	1.75
F	11.5	11.5
D_0	1.5	1.5
D_1	≥1.5	≥1.5
P_0	4.0	4.0
P_1	8.0	8.0
P_2	2.0	2.0

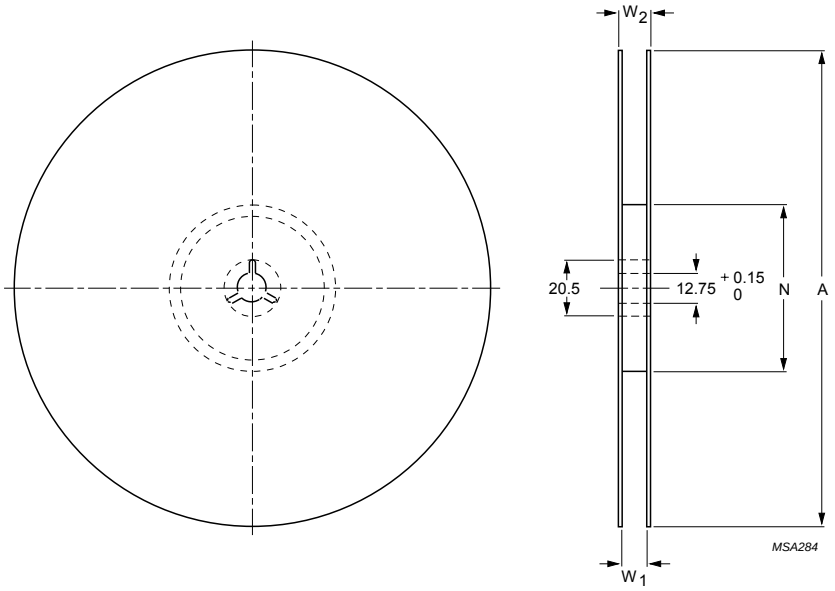

Dimensions in mm.
For dimensions see Table 2.

Fig.8 Reel.

Table 2 Reel dimensions; see Fig.8

SIZE	DIMENSIONS (mm)			
	A	N	W_1	W_2
24	330	100 ±5	24.4	≤28.4

SMD wideband choke metallized WBSM2.5-5/4.8/10

ITEM	SPECIFICATION
Strip material	copper (Cu), tin (Sn) plated
Metallization	copper-tin (CuSn)
Solderability	*"IEC 60068-2-58"*, Part 2, Test Ta, method 1
Mass	≈0.9 g
Taping method	*"IEC 60286-3"* and *"EIA 481-2"*

Grades, parameters and type numbers; see Fig. 1

GRADE	$\lvert Z_{typ} \rvert$ (1) (Ω)	at f (MHz)	TYPE NUMBER
4B1	485	25	WBSM2.5-5/4.8/10-4B1
	850	100	
	350	300	

Note

1. Typical values, $\lvert Z \rvert_{min}$ is –20%.

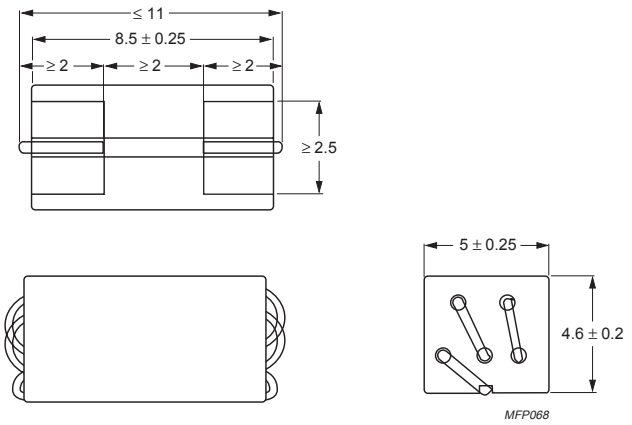

Dimensions in mm.

Fig.1 WBSM2.5-5/4.8/10.

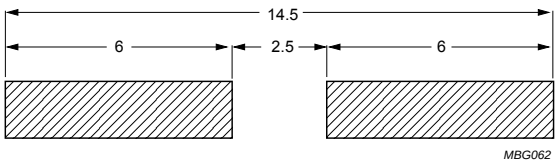

Dimensions of solder lands are based on a solder paste layer thickness of approximately 200 μm (≈0.7 mg solder paste per mm^2).

Fig.2 Solder lands for reflow soldering of WBSM2.5-5/4.8/10.

Soldering profiles

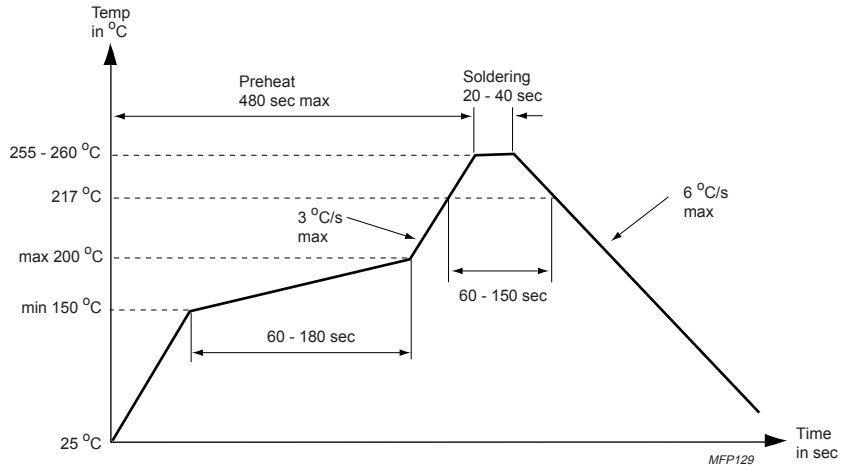

Fig.3 Reflow soldering.

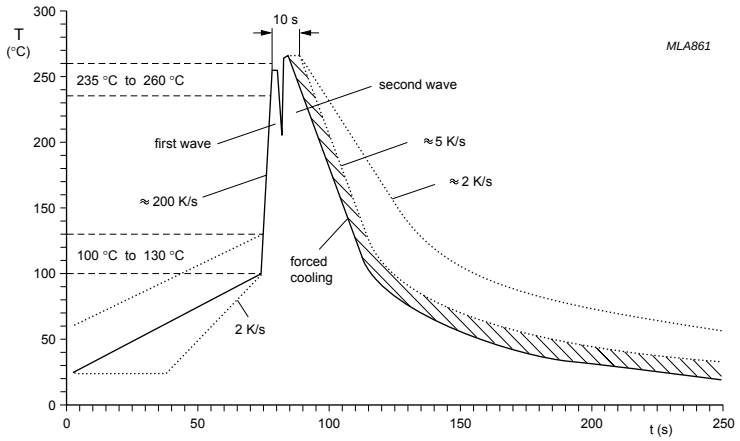

Typical values (solid line).
Process limits (dotted lines).

Fig.4 Double wave soldering.

BLISTER TAPE AND REEL DIMENSIONS

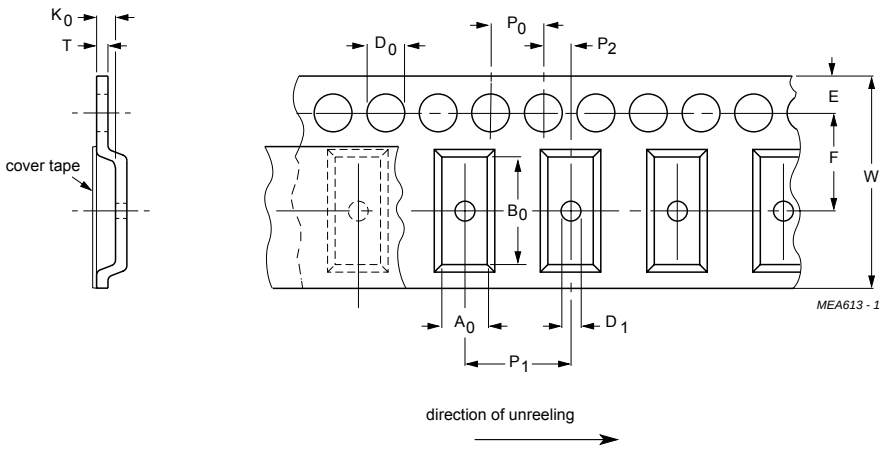

For dimensions see Table 1.

Fig.5 Blister tape.

Table 1 Physical dimensions of blister tape; see Fig. 5

SIZE	DIMENSIONS (mm)
	WBSM2.5-5/4.8/10
A_0	5.51
B_0	11
K_0	5.03
T	0.36
W	24
E	1.75
F	11.5
D_0	1.5
D_1	≥1.5
P_0	4.0
P_1	8.0
P_2	2.0

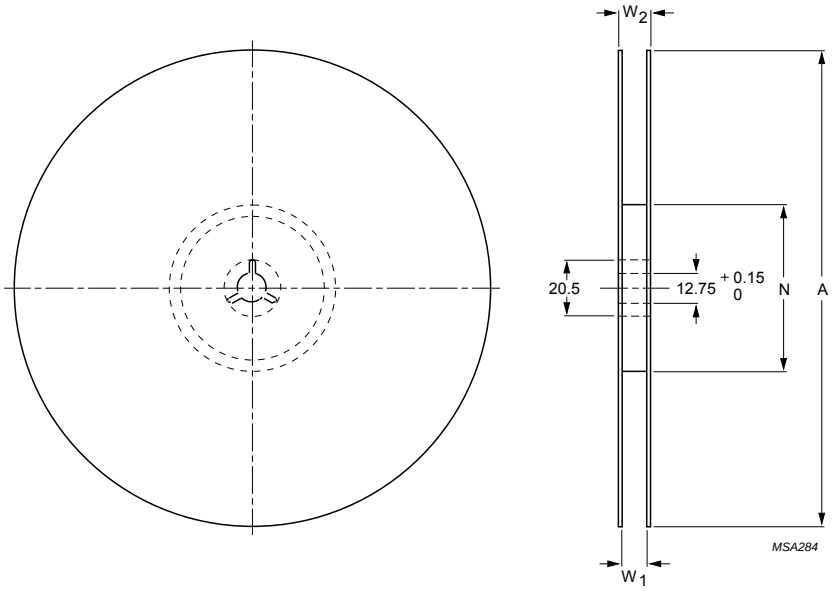

Dimensions in mm.
For dimensions see Table 2.

Fig.6 Reel.

Table 2 Reel dimensions; see Fig.6

SIZE	DIMENSIONS (mm)			
	A	**N**	**W_1**	**W_2**
24	330	100 ±5	24.4	≤28.4

TUBES

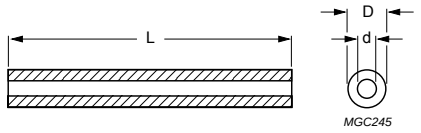

For dimensions see Table 1.

Fig.1 Tube.

Table 1 Grades, parameters and type numbers; see Fig.1

DIMENSIONS (mm)			TYPE NUMBER		
D	**d**	**L**	**4B1**	**3B1**	**3C90**
3.1 – 0.02	1.3 + 0.2	18.8 – 0.5	–	TUB3.1/1.3/19-3B1-DL	–
3.5 – 0.25	1.2 + 0.15	5 – 0.3	TUB3.5/1.2/5-4B1	TUB3.5/1.2/5-3B1	–
3.5 +0.1/–0.2	1.3 + 0.2	3 + 0.5	–	TUB3.5/1.3/3-3B1	–
3.5 ± 0.2	1.3 + 0.2	7.5 +0.5	–	TUB3.5/1.3/7.5-3B1	–
3.7– 0.4	1.2 + 0.2	3.5 – 0.5	TUB3.7/1.2/3.5-4B1	TUB3.7/1.2/3.5-3B1	–
3.8 ± 0.1	2.8 ± 0.1	8 ± 0.25	TUB3.8/2.8/8-4B1	–	–
4 – 0.25	1.6 + 0.15	15 – 0.8	TUB4/1.6/15-4B1	TUB4/1.6/15-3B1	–
4 – 0.25	1.6 + 0.15	40 – 1.6	TUB4/1.6/40-4B1	TUB4/1.6/40-3B1	TUB4/1.6/40-3C90
4 ± 0.2	2 ± 0.2	5 ± 0.5	–	TUB4/2/5-3B1	–
4 ± 0.1	3 + 0.2	9.45 + 0.75	TUB4/3/9.5-4B1	–	–
4.1 + 0.2	2 + 0.2	7 ± 0.2	TUB4.1/2/7-4B1	–	–
4.1 + 0.1	2 + 0.2	7 ± 0.2	–	TUB4.1/2/7-3B1-D	–
4.1 + 0.1	2 + 0.2	11 ± 0.2	–	TUB4.1/2/11-3B1-D	–
4.1 + 0.2	2 + 0.2	25.5 –1	TUB4.1/2/26-4B1	–	–
4.15 – 0.05	2 + 0.2	12.2 – 0.4	TUB4.2/2/12-4B1-DL	TUB4.2/2/12-3B1-DL	–
4.3 – 0.2	2 + 0.2	15.4 – 0.8	TUB4.3/2/15-4B1	TUB4.3/2/15-3B1	–
4.3 – 0.2	2 + 0.2	25.5 – 1	–	TUB4.3/2/26-3B1	–
5 – 0.3	2 + 0.2	50 ± 1	–	–	TUB5/2/50-3C90
5.3 – 0.2	3 + 0.2	22.4 – 0.8	–	TUB5.3/3/22-3B1	–
6 – 0.3	3 + 0.2	20 – 0.9	TUB6/3/20-4B1	TUB6/3/20-3B1	TUB6/3/20-3C90
6 – 0.3	3 + 0.2	30 – 1.2	TUB6/3/30-4B1	–	TUB6/3/30-3C90
8 – 0.4	4 + 0.3	20 – 0.9	TUB8/4/20-4B1	TUB8/4/20-3B1	–
8 – 0.4	4 + 0.3	40 – 1.6	–	TUB8/4/40-3B1	TUB8/4/40-3C90
8 – 0.4	4.2 + 0.6	51.4 – 2.8	TUB8/4.2/51-4B1	TUB8/4.2/51-3B1	–
9.5 ± 0.3	6.5 ± 0.2	17 +0.5/–0.4	–	TUB9.5/6.5/17-3B1	–
10 – 0.5	4.2 + 0.3	20 – 0.9	–	TUB10/4.2/20-3B1	TUB10/4.2/20-3C90
10 – 0.5	6.5 + 0.4	20 – 0.9	TUB10/6.5/20-4B1	–	TUB10/6.5/20-3C90

WIDEBAND CHOKES FOR EMI-SUPPRESSION

General data WBC1.5/A

ITEM	SPECIFICATION
Wire material	copper (Cu), tin (Sn) plated
Solderability	*"IEC 60068-2-20"*, Part 2, Test Ta, method 1

Grades, parameters and type numbers; see Fig.1

GRADE	No. OF TURNS	$\|Z_{typ}\|$ at f		TYPE NUMBER
		(Ω)	(MHz)	
3S4	1.5	≥300	120	WBC1.5/A-3S4
4B1	1.5	≥350	250	WBC1.5/A-4B1
4S2	1.5	213(1)	10	WBC1.5/A-4S2
		400(1)	50	
		470(1)	100	

Note
1. Minimum guaranteed impedance is $|Z|_{typ}$ –20%.
2. Also available with insulated

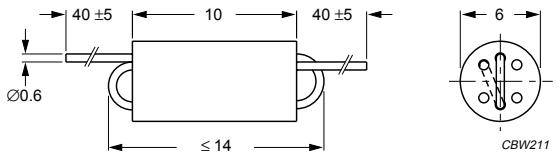

Dimensions in mm.

Fig.1 WBC1.5/A.

General data WBC1.5/1.5/A

ITEM	SPECIFICATION
Wire material	copper (Cu), tin (Sn) plated
Solderability	*"IEC 60068-2-20"*, Part 2, Test Ta, method 1

Grades, parameters and type numbers; see Fig.2

GRADE	No. OF TURNS	$\|Z_{typ}\|$ at f		TYPE NUMBER
		(Ω)	(MHz)	
3S4	2 × 1.5	≥700(1)	50	WBC1.5/1.5/A-3S4
4B1	2 × 1.5	≥800(1)	110	WBC1.5/1.5/A-4B1
4S2	2 × 1.5	213(2)	10	WBC1.5/1.5/A-4S2
		400(2)	50	
		470(2)	100	
4A15	2 × 1.5	1000	50	WBC1.5/1.5/A-4A15
		1000	180	

Notes
1. $|Z|$ measured with both windings connected in series.
2. Minimum guaranteed impedance is $|Z|_{typ}$ –20%; measured with one winding.

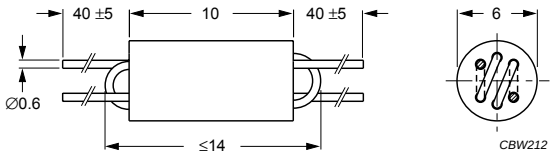

Dimensions in mm.

Fig.2 WBC1.5/1.5/A.

General data WBC2/R

ITEM	SPECIFICATION
Wire material	copper (Cu), tin (Sn) plated
Solderability	*"IEC 60068-2-20"*, Part 2, Test Ta, method 1

Grades, parameters and type numbers; see Fig.3

GRADE	No. OF TURNS	$\|Z_{typ}\|$ [1] at f		TYPE NUMBER
		(Ω)	(MHz)	
4S2	2	300	10	WBC2/R-4S2
		650	50	
		600	100	
4A15	2	≥730	50	WBC2/R-4A15
		≥750	180	

Note
1. Minimum guaranteed impedance is $|Z|_{typ}$ –20%.

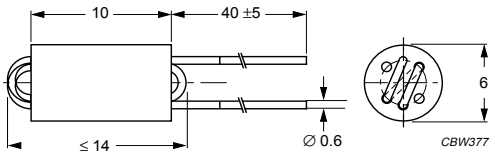

Dimensions in mm.

Fig.3 WBC2/R.

General data WBC2.5/A

ITEM	SPECIFICATION
Wire material	copper (Cu), tin (Sn) plated
Solderability	*"IEC 60068-2-20"*, Part 2, Test Ta, method 1

Grades, parameters and type numbers; see Fig.4

GRADE	No. OF TURNS	$\|Z_{typ}\|$ at f		TYPE NUMBER
		(Ω)	(MHz)	
3S4	2.5	≥600	50	WBC2.5/A-3S4[2]
4B1	2.5	≥700	180	WBC2.5/A-4B1[2]
4S2	2.5	400[1]	10	WBC2.5/A-4S2
		850[1]	50	
		725[1]	100	
4A15	2.5	800	50	WBC2.5/A-4A15
		820	180	

Note
1. Minimum guaranteed impedance is $|Z|_{typ}$ –20%.
2. Also available with insulated wires, sleeves, encapsulated and taped and reeled.

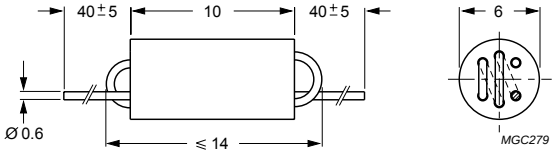

Dimensions in mm.

Fig.4 WBC2.5/A.

General data WBC2.5/R

ITEM	SPECIFICATION
Wire material	copper (Cu), tin (Sn) plated
Solderability	*"IEC 60068-2-20"*, Part 2, Test Ta, method 1

Grades, parameters and type numbers; see Fig.5

GRADE	No. OF TURNS	$\|Z_{typ}\|$ at f		TYPE NUMBER
		(Ω)	(MHz)	
3S4	2.5	≥600	50	WBC2.5/R-3S4[1] sup
4B1	2.5	≥700	75	WBC2.5/R-4B1[2] sup
4S2	2.5	400	10	WBC2.5/R-4S2 sup
		850	50	
		725	100	

Note
1. Also available with insulated wires, sleeves and moulded.
2. Also available with insulated wires, sleeves.

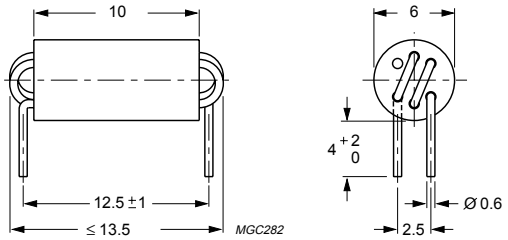

Dimensions in mm.

Fig.5 WBC2.5/R.

General data WBC2.5/SP

ITEM	SPECIFICATION
Wire material	copper (Cu), tin (Sn) plated
Support	polyamide (PA6.6) plate to allow mounting across circuit tracks; flame retardant in accordance with UL 94V-0
Solderability	*"IEC 60068-2-20"*, Part 2, Test Ta, method 1

Grades, parameters and type numbers; see Fig.6

GRADE note 1	No. OF TURNS	$\|Z_{typ}\|$ at f		TYPE NUMBER
		(Ω)	(MHz)	
3S4	2.5	≥600	50	WBC2.5/SP-3S4 sup
4B1	2.5	≥700	75	WBC2.5/SP-4B1 sup

Note
1. Colour code 3S4 = blue, 4B1 = green.

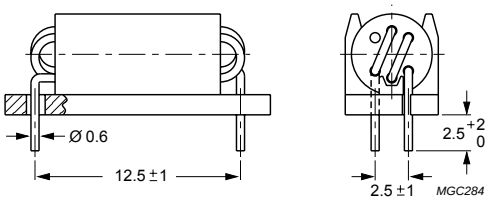

Dimensions in mm.

Fig.6 WBC2.5/SP.

General data WBC3/R

ITEM	SPECIFICATION
Wire material	copper (Cu), tin (Sn) plated
Solderability	*"IEC 60068-2-20"*, Part 2, Test Ta, method 1

Grades, parameters and type numbers; see Fig.7

GRADE	No. OF TURNS	$\|Z_{typ}\|$ at f		TYPE NUMBER
		(Ω)	(MHz)	
3S4	3	≥650	63	WBC3/R-3S4[2]
4B1	3	≥800	110	WBC3/R-4B1[2]
4S2	3	500[1]	10	WBC3/R-4S2
		1 000[1]	50	
		688[1]	100	
4A15	3	≥1000	50	WBC3/R-4A15
		≥1000	180	

Note
1. Minimum guaranteed impedance is $|Z|_{typ}$ −20%.
2. Also available with encapsulation and/or taped and reeled.

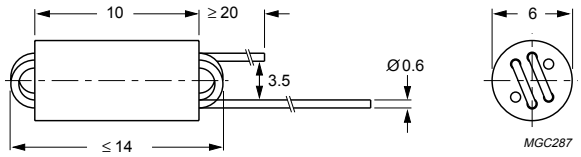

Dimensions in mm.

Fig.7 WBC3/R.

MFP061

PRODUCT OVERVIEW AND TYPE NUMBER STRUCTURE

Product overview gapped ferrite toroids

CORE TYPE	V_e (mm^3)	A_e (mm^2)	MASS (g)
TN10/6/4	188	7.8	0.95
TN13/7.5/5	368	12.2	1.8
TN17/11/6.4	787	18.7	3.7
TN20/10/6.4	1330	30.5	6.9
TN23/14/7.5	1845	33.1	9.0
TN26/15/11	3700	61.5	19

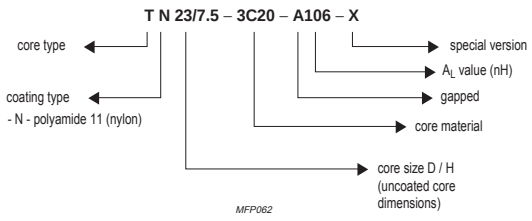

Fig.1 Type number structure for gapped toroids.

RING CORES (TOROIDS)

Effective core parameters

SYMBOL	PARAMETER	VALUE	UNIT
$\Sigma(l/A)$	core factor (C1)	3.07	mm^{-1}
V_e	effective volume	188	mm^3
l_e	effective length	24.1	mm
A_e	effective area	7.8	mm^2
m	mass of core	≈ 0.95	g

Coating

The cores are coated with polyamide 11 (PA11), flame retardant in accordance with *"UL 94V-2"*; UL file number E 45228 (M).
The colour is white.
Maximum operating temperature is 160 °C.

Isolation voltage

DC isolation voltage: 1000 V.
Contacts are applied on the edge of the ring core, which is also the critical point for the winding operation.

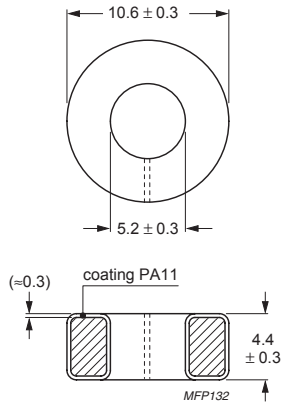

Dimensions in mm.

Fig.1 TN10/6/4 ring core.

Ring core data

GRADE	A_L (1) (nH)	μ_e	TYPE NUMBER
3C20	48 ± 15%	≈ 90	TN10/4-3C20-A48
	66 ± 15%	≈ 125	TN10/4-3C20-A66
	78 ± 15%	≈ 147	TN10/4-3C20-A78
	84 ± 15%	≈ 160	TN10/4-3C20-A84
	92 ± 15%	≈ 173	TN10/4-3C20-A92

Note
1. Winding equally distributed over the circumference.

Properties of cores under power conditions

GRADE	B (mT) at	CORE LOSS (W) at	
	H = 1200 A/m; f = 10 kHz; T = 100 °C	$\hat{f}$ = 100 kHz; $\hat{B}$ = 100 mT; T = 100 °C	$\hat{f}$ = 100 kHz; $\hat{B}$ = 200 mT; T = 100 °C
3C20	~ 400	≤ 0.017	≤ 0.11

Gapped ferrite toroids TN13/7.5/5

RING CORES (TOROIDS)

Effective core parameters

SYMBOL	PARAMETER	VALUE	UNIT
$\Sigma(l/A)$	core factor (C1)	2.46	mm^{-1}
V_e	effective volume	368	mm^3
l_e	effective length	30.1	mm
A_e	effective area	12.2	mm^2
m	mass of core	≈ 1.8	g

Coating

The cores are coated with polyamide 11 (PA11), flame retardant in accordance with *"UL 94V-2"*; UL file number E 45228 (M).
The colour is white.
Maximum operating temperature is 160 °C.

Isolation voltage

DC isolation voltage: 1500 V.
Contacts are applied on the edge of the ring core, which is also the critical point for the winding operation.

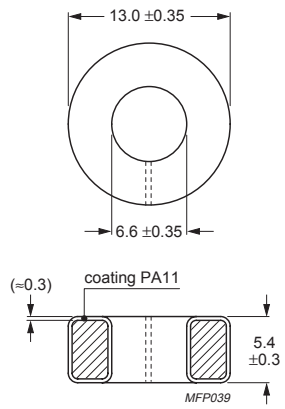

Dimensions in mm.

Fig.1 TN13/7.5/5 ring core.

Ring core data

GRADE	A_L (1) (nH)	μ_e	TYPE NUMBER
3C20	40 ± 15%	≈ 90	TN13/5-3C20-A40
	56 ± 15%	≈ 125	TN13/5-3C20-A56
	67 ± 15%	≈ 147	TN13/5-3C20-A67
	72 ± 15%	≈ 160	TN13/5-3C20-A72
	79 ± 15%	≈ 173	TN13/5-3C20-A79

Note
1. Winding equally distributed over the circumference.

Properties of cores under power conditions

GRADE	B (mT) at	CORE LOSS (W) at	
	H = 1200 A/m; f = 10 kHz; T = 100 °C	$\hat{f}$ = 100 kHz; $\hat{B}$ = 100 mT; T = 100 °C	$\hat{f}$ = 100 kHz; $\hat{B}$ = 200 mT; T = 100 °C
3C20	~ 400	≤ 0.033	≤ 0.22

RING CORES (TOROIDS)

Effective core parameters

SYMBOL	PARAMETER	VALUE	UNIT
$\Sigma(l/A)$	core factor (C1)	2.24	mm^{-1}
V_e	effective volume	787	mm^3
l_e	effective length	42.0	mm
A_e	effective area	18.7	mm^2
m	mass of core	≈ 3.7	g

Coating

The cores are coated with polyamide 11 (PA11), flame retardant in accordance with *"UL 94V-2"*; UL file number E 45228 (M).
The colour is white.
Maximum operating temperature is 160 °C.

Isolation voltage

DC isolation voltage: 1500 V.
Contacts are applied on the edge of the ring core, which is also the critical point for the winding operation.

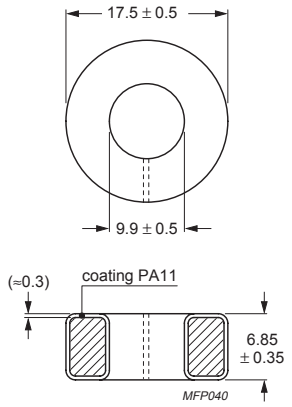

Dimensions in mm.

Fig.1 TN17/11/6.4 ring core.

Ring core data

GRADE	A_L (1) (nH)	μ_e	TYPE NUMBER
3C20	52 ± 15%	≈ 90	TN17/6.4-3C20-A52
	72 ± 15%	≈ 125	TN17/6.4-3C20-A72
	88 ± 15%	≈ 147	TN17/6.4-3C20-A88
	92 ± 15%	≈ 160	TN17/6.4-3C20-A92
	104 ± 15%	≈ 173	TN17/6.4-3C20-A104

Note
1. Winding equally distributed over the circumference.

Properties of cores under power conditions

GRADE	B (mT) at	CORE LOSS (W) at	
	H = 1200 A/m; f = 10 kHz; T = 100 °C	f = 100 kHz; $\hat{B}$ = 100 mT; T = 100 °C	f = 100 kHz; $\hat{B}$ = 200 mT; T = 100 °C
3C20	~ 400	≤ 0.070	≤ 0.47

Gapped ferrite toroids TN20/10/6.4

RING CORES (TOROIDS)

Effective core parameters

SYMBOL	PARAMETER	VALUE	UNIT
$\Sigma(l/A)$	core factor (C1)	1.43	mm^{-1}
V_e	effective volume	1330	mm^3
l_e	effective length	43.6	mm
A_e	effective area	30.5	mm^2
m	mass of core	≈ 6.9	g

Coating

The cores are coated with polyamide 11 (PA11), flame retardant in accordance with *"UL 94V-2"*; UL file number E 45228 (M).
The colour is white.
Maximum operating temperature is 160 °C.

Isolation voltage

DC isolation voltage: 2000 V.
Contacts are applied on the edge of the ring core, which is also the critical point for the winding operation.

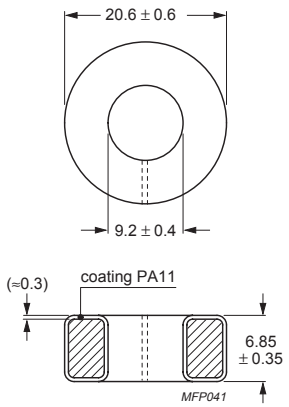

Dimensions in mm.

Fig.1 TN20/10/6.4 ring core.

Ring core data

GRADE	A_L (1) (nH)	μ_e	TYPE NUMBER
3C20	68 ± 15%	≈ 125	TN20/6.4-3C20-A68
	81 ± 15%	≈ 147	TN20/6.4-3C20-A81
	87 ± 15%	≈ 160	TN20/6.4-3C20-A87
	96 ± 15%	≈ 173	TN20/6.4-3C20-A96
	109 ± 15%	≈ 200	TN20/6.4-3C20-A109

Note
1. Winding equally distributed over the circumference.

Properties of cores under power conditions

GRADE	B (mT) at	CORE LOSS (W) at	
	H = 1200 A/m; f = 10 kHz; T = 100 °C	f = 100 kHz; $\hat{B}$ = 100 mT; T = 100 °C	f = 100 kHz; $\hat{B}$ = 200 mT; T = 100 °C
3C20	~ 400	≤ 0.12	≤ 0.80

RING CORES (TOROIDS)

Effective core parameters

SYMBOL	PARAMETER	VALUE	UNIT
$\Sigma(l/A)$	core factor (C1)	1.69	mm^{-1}
V_e	effective volume	1845	mm^3
l_e	effective length	55.8	mm
A_e	effective area	33.1	mm^2
m	mass of core	≈ 9.0	g

Coating

The cores are coated with polyamide 11 (PA11), flame retardant in accordance with *"UL 94V-2"*; UL file number E 45228 (M).
The colour is white.
Maximum operating temperature is 160 °C.

Isolation voltage

DC isolation voltage: 2000 V.
Contacts are applied on the edge of the ring core, which is also the critical point for the winding operation.

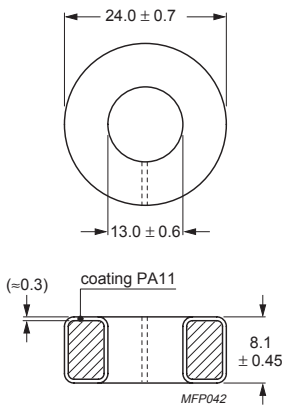

Dimensions in mm.

Fig.1 TN23/14/7.5 ring core.

Ring core data

GRADE	A_L (1) (nH)	μ_e	TYPE NUMBER
3C20	65 ± 15%	≈ 90	TN23/7.5-3C20-A65
	90 ± 15%	≈ 125	TN23/7.5-3C20-A90
	106 ± 15%	≈ 147	TN23/7.5-3C20-A106
	115 ± 15%	≈ 160	TN23/7.5-3C20-A115
	124 ± 15%	≈ 173	TN23/7.5-3C20-A124

Note
1. Winding equally distributed over the circumference.

Properties of cores under power conditions

GRADE	B (mT) at	CORE LOSS (W) at	
	H = 1200 A/m; f = 10 kHz; T = 100 °C	f = 100 kHz; $\hat{B}$ = 100 mT; T = 100 °C	f = 100 kHz; $\hat{B}$ = 200 mT; T = 100 °C
3C20	~ 400	≤ 0.16	≤ 1.1

RING CORES (TOROIDS)

Effective core parameters

SYMBOL	PARAMETER	VALUE	UNIT
$\Sigma(l/A)$	core factor (C1)	0.982	mm^{-1}
V_e	effective volume	3700	mm^3
l_e	effective length	60.1	mm
A_e	effective area	61.5	mm^2
m	mass of core	≈ 19	g

Coating

The cores are coated with polyamide 11 (PA11), flame retardant in accordance with *"UL 94V-2"*; UL file number E 45228 (M).
The colour is white.
Maximum operating temperature is 160 °C.

Isolation voltage

DC isolation voltage: 2000 V.
Contacts are applied on the edge of the ring core, which is also the critical point for the winding operation.

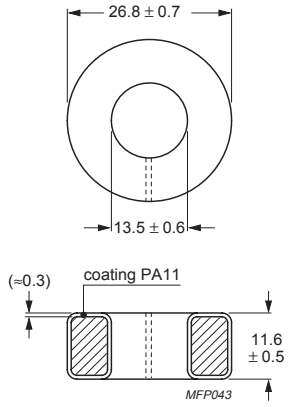

Dimensions in mm.

Fig.1 TN26/15/11 ring core.

Ring core data

GRADE	A_L (1) (nH)	μ_e	TYPE NUMBER
3C20	113 ± 15%	≈ 90	TN26/11-3C20-A113
	157 ± 15%	≈ 125	TN26/11-3C20-A157
	185 ± 15%	≈ 147	TN26/11-3C20-A185
	201 ± 15%	≈ 160	TN26/11-3C20-A201
	217 ± 15%	≈ 173	TN26/11-3C20-A217

Note
1. Winding equally distributed over the circumference.

Properties of cores under power conditions

GRADE	B (mT) at	CORE LOSS (W) at	
	H = 1200 A/m; f = 10 kHz; T = 100 °C	f = 100 kHz; $\hat{B}$ = 100 mT; T = 100 °C	f = 100 kHz; $\hat{B}$ = 200 mT; T = 100 °C
3C20	~ 400	≤ 0.33	≤ 2.2

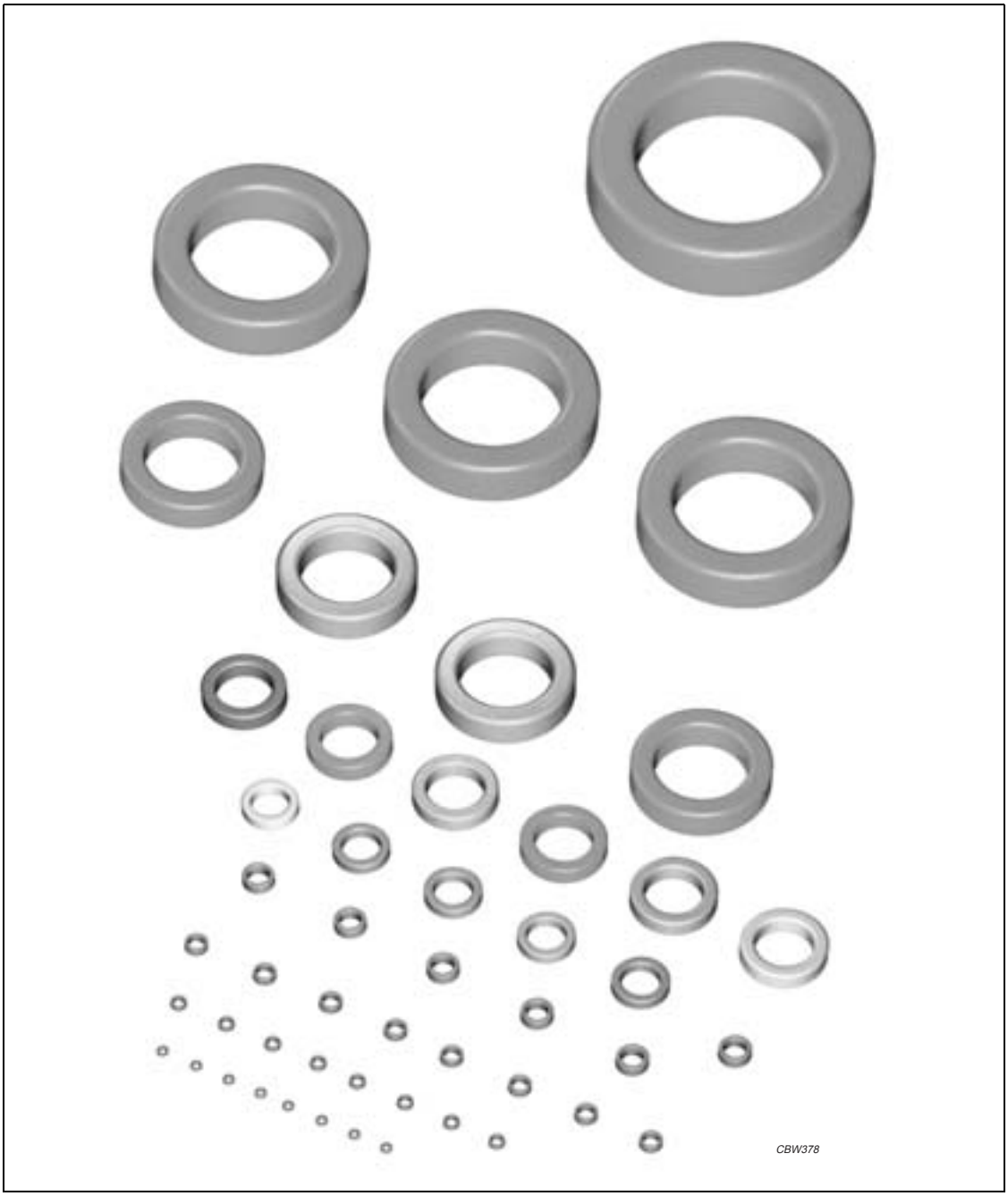
CBW378

PRODUCT OVERVIEW AND TYPE NUMBER STRUCTURE

Product overview Ferrite ring cores (toroids)

CORE TYPE	V_e (mm^3)	A_e (mm^2)	MASS (g)
TC2.5/1.3/0.8	2.7	0.49	0.012
TC2.5/1.3/1.3	4.29	0.76	0.022
TC2.5/1.3/2.5	8.57	1.55	0.044
TC2.5/1.5/0.8	2.21	0.37	0.012
TC2.5/1.5/1	2.94	0.49	0.015
TC3.1/1.3/1.3	6.35	1.06	0.033
TC3.1/1.8/2	9.10	1.26	0.05
TC3.4/1.8/1.3	7.3	0.96	0.035
TC3.4/1.8/2	11.6	1.54	0.06
TC3.4/1.8/2.1	11.5	1.52	0.06
TC3.4/1.8/2.3	14.0	1.83	0.068
TC3.5/1.6/1.3	8.3	1.15	0.043
TC3.5/1.8/1.3	7.87	1.03	0.04
TC3.5/1.8/1.8	11.0	1.44	0.06
TC3.5/1.8/2	12.4	1.62	0.05
TC3.9/1.8/1.8	14.8	1.83	0.09
TC3.9/1.8/2.5	21.1	2.6	0.12
TC3.9/2.2/1.3	9.2	1.0	0.045
TC4/1.8/0.8	6.43	0.79	0.035
TC4/2/2	16.7	1.92	0.095
TC4/2.2/1.1	8.8	0.96	0.04
TC4/2.2/1.3	9.8	1.07	0.05
TC4/2.2/1.6	12.9	1.40	0.06
TC4/2.2/1.8	14.4	1.56	0.07
TC4/2.2/2	16.1	1.75	0.08
TC4.8/2.3/1.3	15.5	1.52	0.09
TC5.8/3.1/0.8	13.2	1.01	0.07
TC5.8/3.1/1.5	26.1	2.00	0.13
TC5.8/3.1/3.2	55.8	4.28	0.31
TC5.9/3.1/3.1	53.8	4.12	0.14
TC6/4/2	30.2	1.97	0.15
TC6/4/3	45.2	2.96	0.23
TC6.3/3.8/2.5	46.5	3.06	0.23
TC7.6/3.2/4.8	148	9.92	0.70
TC7.6/3.2/5.2	160	10.6	0.75
TC8.2/3.7/4	144	8.50	0.70
TC9/6/3	102	4.44	0.50
TN9/6/3	102	4.44	0.50
TX9/6/3	102	4.44	0.50

CORE TYPE	V_e (mm^3)	A_e (mm^2)	MASS (g)
TC9.5/4.8/3.2	148	7.16	0.70
TN10/6/4	188	7.8	0.95
TX10/6/4	188	7.8	0.95
TX13/7.1/4.8	361	12.3	1.8
TN13/7.5/5	368	12.2	1.8
TX13/7.5/5	368	12.2	1.8
TX13/7.9/6.4	442	14.1	2.2
TN14/9/5	430	12.3	2.1
TX14/9/5	430	12.3	2.1
TN14/9/9	774	22.1	3.8
TX14/9/9	774	22.1	3.8
TX16/9.1/4.7	548	14.7	2.7
TN16/9.6/6.3	760	19.7	3.8
TX16/9.6/6.3	760	19.7	3.8
TN19/11/10	1795	40.8	9.2
TN19/11/15	2692	61.2	13.8
TN20/10/7	1465	33.6	7.7
TX20/10/7	1465	33.6	7.7
TX22/14/6.4	1340	24.8	6.5
TX22/14/13	2750	50.9	14
TN23/14/7	1722	30.9	8.4
TN25/15/10	2944	48.9	15
TX25/15/10	2944	48.9	15
TN26/15/10	3360	55.9	17
TX26/15/10	3360	55.9	17
TN26/15/20	6720	112	34
TN29/11/6	2680	50.8	14
TN29/19/7.5	2700	36.9	13.5
TX29/19/7.5	2700	36.9	13.5
TX29/19/7.6	2600	35.5	13
TN29/19/15	5410	73.9	28
TX29/19/15	5410	73.9	28
TN32/19/13	5820	76.5	29
TX32/19/13	5820	76.5	29
TX36/23/10	5820	64.9	28
TX36/23/15	8740	97.5	40
TX39/20/13	9513	112	45
TX40/24/16	12100	125	62
TX40/24/20	15100	157	77

CORE TYPE	V_e (mm^3)	A_e (mm^2)	MASS (g)
TX42/26/13	9860	95.8	53
TX42/26/18	13810	134	55
TX50/30/19	22378	186	100
TX51/32/19	21500	172	100
TX55/32/18	26580	202	100
TX58/41/18	23200	152	110
TX63/38/25	46500	306	220
TX74/39/13	34300	208	170
TX80/40/15	50200	288	240
TX87/54/14	46400	217	220
T87/56/13	42133	194	200
TX102/66/15	68200	267	325
T107/65/18	96000	370	456
TX107/65/18	96000	370	456
T107/65/25	133000	514	680
T140/106/25	161100	422	800
TX140/106/25	161100	422	800
TX152/104/19	176600	450	878

• In accordance with IEC 62317, part 12.

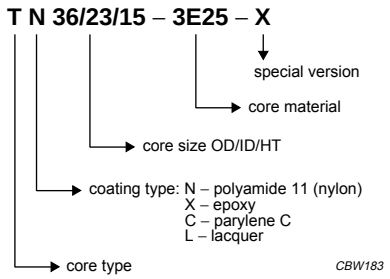

Fig.1 Type number structure for toroids.

RING CORES (TOROIDS)

Effective core parameters

SYMBOL	PARAMETER	VALUE	UNIT
Σ(l/A)	core factor (C1)	11.3	mm^{-1}
V_e	effective volume	2.7	mm^3
l_e	effective length	5.53	mm
A_e	effective area	0.49	mm^2
m	mass of core	≈0.012	g

Coating

The cores are coated with parylene C, flame retardant in accordance with *"UL 94V-2"*; UL file number E 194397.
The coating is transparent.
Maximum operating temperature is 90 °C.

Isolation voltage

DC isolation voltage: 1000 V.
Contacts are applied on the edge of the ring core, which is also the critical point for the winding operation.

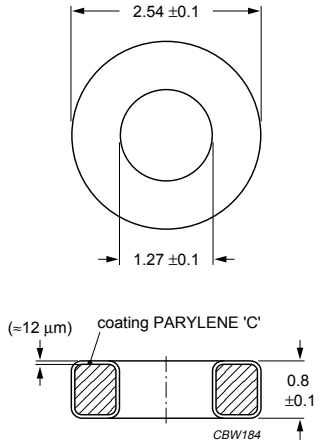

Dimensions (uncoated) in mm.

Fig.1 TC2.5/1.3/0.8 ring core.

Ring core data

GRADE	A_L (nH)	μ_i	TYPE NUMBER
4A11	94 +25/−20%	≈850	TC2.5/1.3/0.8-4A11

RING CORES (TOROIDS)

Effective core parameters

SYMBOL	PARAMETER	VALUE	UNIT
$\Sigma(l/A)$	core factor (C1)	7.14	mm^{-1}
V_e	effective volume	4.29	mm^3
l_e	effective length	5.53	mm
A_e	effective area	0.76	mm^2
m	mass of core	≈ 0.022	g

Coating

The cores are coated with parylene C, flame retardant in accordance with *"UL 94V-2"*; UL file number E 194397.
The coating is transparent.
Maximum operating temperature is 90 °C.

Isolation voltage

DC isolation voltage: 1000 V.
Contacts are applied on the edge of the ring core, which is also the critical point for the winding operation.

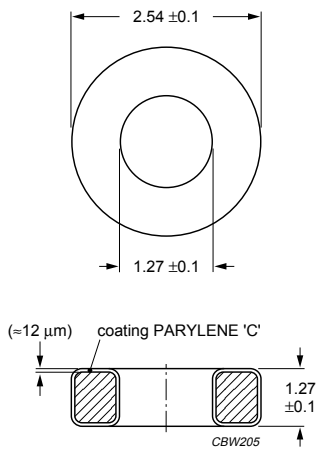

Dimensions (uncoated) in mm.

Fig.1 TC2.5/1.3/1.3 ring core.

Ring core data

GRADE	A_L (nH)	μ_i	TYPE NUMBER
4A11 des	150 ± 25%	≈ 850	TC2.5/1.3/1.3-4A11
3S4 des	300 ± 25%	≈ 1700	TC2.5/1.3/1.3-3S4
3E25 des	970 ± 30%	≈ 5500	TC2.5/1.3/1.3-3E25
3E6 des	1835 ± 30%	≈ 10000	TC2.5/1.3/1.3-3E6[1]

Note

1. Maximum tolerances on mechanical dimensions are ± 0.13 mm.

RING CORES (TOROIDS)

Effective core parameters

SYMBOL	PARAMETER	VALUE	UNIT
Σ(l/A)	core factor (C1)	3.57	mm^{-1}
V_e	effective volume	8.57	mm^3
l_e	effective length	5.53	mm
A_e	effective area	1.55	mm^2
m	mass of core	≈0.044	g

Coating

The cores are coated with parylene C, flame retardant in accordance with *"UL 94V-2"*; UL file number E 194397.
The coating is transparent.
Maximum operating temperature is 90 °C.

Isolation voltage

DC isolation voltage: 1000 V.
Contacts are applied on the edge of the ring core, which is also the critical point for the winding operation.

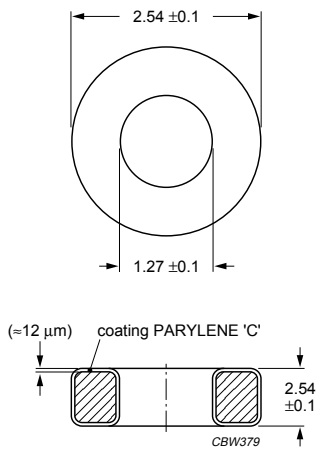

Dimensions (uncoated) in mm.

Fig.1 TC2.5/1.3/2.5 ring core.

Ring core data

GRADE	A_L (nH)	μ_i	TYPE NUMBER
3E28 des	1400 ±25%	≈4000	TC2.5/1.3/2.5-3E28

RING CORES (TOROIDS)

Effective core parameters

SYMBOL	PARAMETER	VALUE	UNIT
Σ(l/A)	core factor (C1)	16.4	mm^{-1}
V_e	effective volume	2.21	mm^3
l_e	effective length	6.02	mm
A_e	effective area	0.37	mm^2
m	mass of core	≈ 0.012	g

Coating

The cores are coated with parylene C, flame retardant in accordance with *"UL 94V-2"*; UL file number E 194397.
The coating is transparent.
Maximum operating temperature is 90 °C.

Isolation voltage

DC isolation voltage: 1000 V.
Contacts are applied on the edge of the ring core, which is also the critical point for the winding operation.

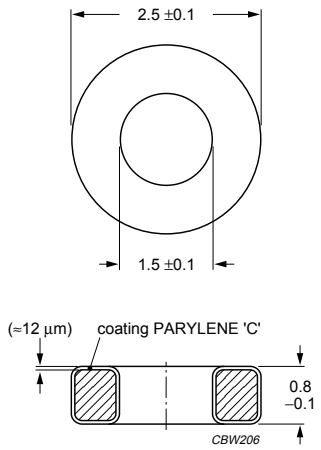

Dimensions (uncoated) in mm.

Fig.1 TC2.5/1.5/0.8 ring core.

Ring core data

GRADE	A_L (nH)	μ_i	TYPE NUMBER
3E6 des	765 ± 30%	≈ 10000	TC2.5/1.5/0.8-3E6

RING CORES (TOROIDS)

Effective core parameters

SYMBOL	PARAMETER	VALUE	UNIT
$\Sigma(l/A)$	core factor (C1)	12.3	mm^{-1}
V_e	effective volume	2.94	mm^3
l_e	effective length	6.02	mm
A_e	effective area	0.489	mm^2
m	mass of core	≈0.015	g

Coating

The cores are coated with parylene C, flame retardant in accordance with *"UL 94V-2"*; UL file number E 194397.
The coating is transparent.
Maximum operating temperature is 90 °C.

Isolation voltage

DC isolation voltage: 1000 V.
Contacts are applied on the edge of the ring core, which is also the critical point for the winding operation.

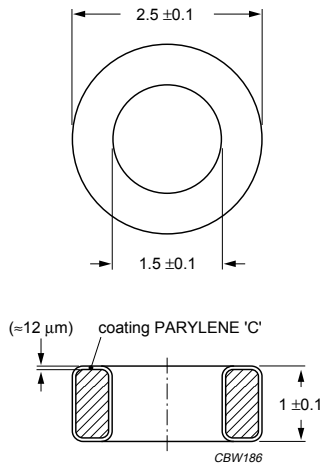

Dimensions (uncoated) in mm.

Fig.1 TC2.5/1.5/1 ring core.

Ring core data

GRADE	A_L (nH)	μ_i	TYPE NUMBER
3E28 des	410 ± 25%	≈ 4000	TC2.5/1.5/1-3E28
3E27 des	513 ± 20%	≈ 5500	TC2.5/1.5/1-3E27
3E5 des	920 ± 30%	≈ 9000	TC2.5/1.5/1-3E5
3E6 des	1020 ± 30%	≈ 10 000	TC2.5/1.5/1-3E6

RING CORES (TOROIDS)

Effective core parameters

SYMBOL	PARAMETER	VALUE	UNIT
$\Sigma(l/A)$	core factor (C1)	5.65	mm^{-1}
V_e	effective volume	6.35	mm^3
l_e	effective length	5.99	mm
A_e	effective area	1.06	mm^2
m	mass of core	≈ 0.033	g

Coating

The cores are coated with parylene C, flame retardant in accordance with *"UL 94V-2"*; UL file number E 194397.
The coating is transparent.
Maximum operating temperature is 90 °C.

Isolation voltage

DC isolation voltage: 1000 V.
Contacts are applied on the edge of the ring core, which is also the critical point for the winding operation.

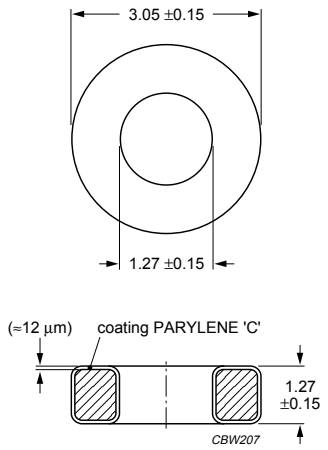

Dimensions (uncoated) in mm.

Fig.1 TC3.1/1.3/1.3 ring core.

Ring core data

GRADE	A_L (nH)	μ_i	TYPE NUMBER
4A11 des	190 ± 20%	≈ 850	TC3.1/1.3/1.3-4A11
3E25 des	1225 ± 25%	≈ 5500	TC3.1/1.3/1.3-3E25
3E6 des	2225 ± 30%	≈ 10000	TC3.1/1.3/1.3-3E6

RING CORES (TOROIDS)

Effective core parameters

SYMBOL	PARAMETER	VALUE	UNIT
$\Sigma(l/A)$	core factor (C1)	5.75	mm^{-1}
V_e	effective volume	9.10	mm^3
l_e	effective length	7.23	mm
A_e	effective area	1.26	mm^2
m	mass of core	≈ 0.05	g

Coating

The cores are coated with parylene C, flame retardant in accordance with *"UL 94V-2"*; UL file number E 194397.
The coating is transparent.
Maximum operating temperature is 90 °C.

Isolation voltage

DC isolation voltage: 1000 V.
Contacts are applied on the edge of the ring core, which is also the critical point for the winding operation.

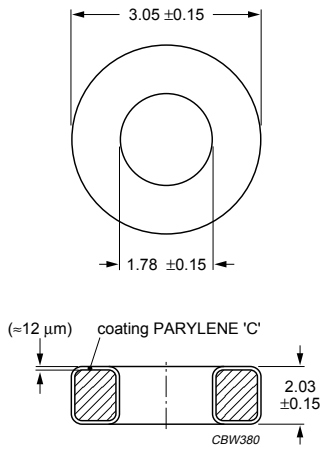

Dimensions (uncoated) in mm.

Fig.1 TC3.1/1.8/2 ring core.

Ring core data

GRADE	A_L (nH)	μ_i	TYPE NUMBER
3E28 des	1100 ± 25%	≈ 5000	TC3.1/1.8/2-3E28

RING CORES (TOROIDS)

Effective core parameters

SYMBOL	PARAMETER	VALUE	UNIT
$\Sigma(l/A)$	core factor (C1)	7.93	mm^{-1}
V_e	effective volume	7.3	mm^3
l_e	effective length	7.62	mm
A_e	effective area	0.96	mm^2
m	mass of core	≈ 0.035	g

Coating

The cores are coated with parylene C; flame retardant in accordance with *"UL 94V-2"*; UL file number E 194397.
The coating is transparent.
Maximum operating temperature is 90 °C.

Isolation voltage

DC isolation voltage: 1000 V.
Contacts are applied on the edge of the ring core, which is also the critical point for the winding operation

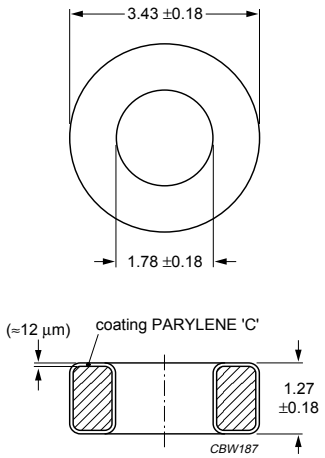

Dimensions in mm.

Fig.1 TC3.4/1.8/1.3 ring core.

Ring core data

GRADE	A_L (nH)	μ_i	TYPE NUMBER
3D3 sup	110 ± 20%	≈ 750	TC3.4/1.8/1.3-3D3
3B7 sup	375 ± 20%	≈ 2300	TC3.4/1.8/1.3-3B7
3E27	660 ± 20%	≈ 4200	TC3.4/1.8/1.3-3E27
3E6 des	1580 ± 30%	≈ 10000	TC3.4/1.8/1.3-3E6

RING CORES (TOROIDS)

Effective core parameters

SYMBOL	PARAMETER	VALUE	UNIT
Σ(l/A)	core factor (C1)	4.9	mm^{-1}
V_e	effective volume	11.6	mm^3
l_e	effective length	7.54	mm
A_e	effective area	1.54	mm^2
m	mass of core	≈ 0.059	g

Coating

The cores are coated with parylene C, flame retardant in accordance with *"UL 94V-2"*; UL file number E 194397.
The coating is transparent.
Maximum operating temperature is 90 °C.

Isolation voltage

DC isolation voltage: 1000 V.
Contacts are applied on the edge of the ring core, which is also the critical point for the winding operation.

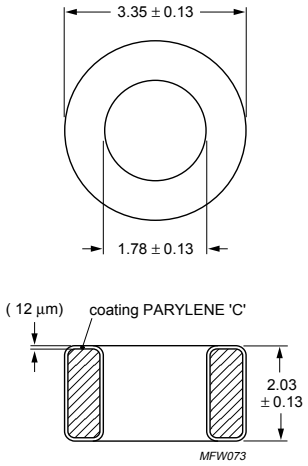

Dimensions (uncoated) in mm.

Fig.1 TC3.4/1.8/2 ring core.

Ring core data

GRADE	A_L (nH)	μ_i	TYPE NUMBER
3E25 des	1420 ± 25%	≈ 5500	TC3.4/1.8/2-3E25
3E7 des	3080 ± 30%	≈ 12000	TC3.4/1.8/2-3E7

RING CORES (TOROIDS)

Effective core parameters

SYMBOL	PARAMETER	VALUE	UNIT
$\Sigma(l/A)$	core factor (C1)	4.97	mm^{-1}
V_e	effective volume	11.5	mm^3
l_e	effective length	7.54	mm
A_e	effective area	1.52	mm^2
m	mass of core	≈ 0.06	g

Coating

The cores are coated with parylene C, flame retardant in accordance with *"UL 94V-2"*; UL file number E 194397.
The coating is transparent.
Maximum operating temperature is 90 °C.

Isolation voltage

DC isolation voltage: 1000 V.
Contacts are applied on the edge of the ring core, which is also the critical point for the winding operation.

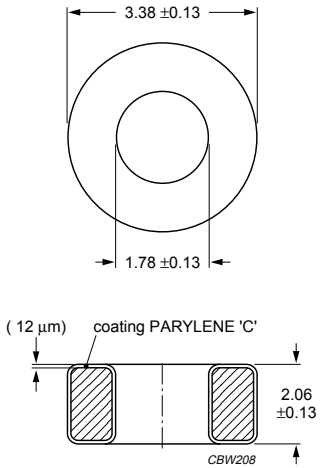

Dimensions (uncoated) in mm.

Fig.1 TC3.4/1.8/2.1 ring core.

Ring core data

GRADE	A_L (nH)	μ_i	TYPE NUMBER
3E25 des	1420 ± 25%	≈ 5600	TC3.4/1.8/2.1-3E25
3E28 des	1045 ± 25%	≈ 4000	TC3.4/1.8/2.1-3E28

RING CORES (TOROIDS)

Effective core parameters

SYMBOL	PARAMETER	VALUE	UNIT
$\Sigma(l/A)$	core factor (C1)	4.16	mm^{-1}
V_e	effective volume	14.0	mm^3
l_e	effective length	7.63	mm
A_e	effective area	1.83	mm^2
m	mass of core	≈ 0.068	g

Coating

The cores are coated with parylene C, flame retardant in accordance with *"UL 94V-2"*; UL file number E 194397.
The coating is transparent.
Maximum operating temperature is 90 °C.

Isolation voltage

DC isolation voltage: 1000 V.
Contacts are applied on the edge of the ring core, which is also the critical point for the winding operation.

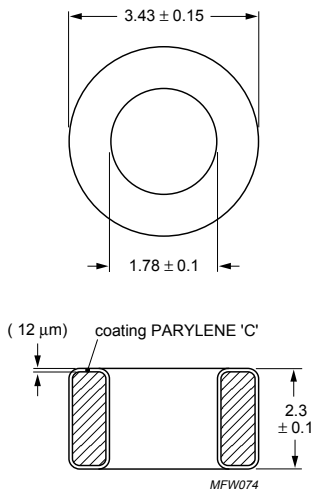

Dimensions (uncoated) in mm.

Fig.1 TC3.4/1.8/2.3 ring core.

Ring core data

GRADE	A_L (nH)	μ_i	TYPE NUMBER
3E28 des	1207 ± 25%	≈ 4000	TC3.4/1.8/2.3-3E28

RING CORES (TOROIDS)

Effective core parameters

SYMBOL	PARAMETER	VALUE	UNIT
Σ(l/A)	core factor (C1)	6.32	mm^{-1}
V_e	effective volume	8.3	mm^3
l_e	effective length	7.25	mm
A_e	effective area	1.15	mm^2
m	mass of core	≈ 0.043	g

Coating

The cores are coated with parylene C, flame retardant in accordance with *"UL 94V-2"*; UL file number E 194397.
The coating is transparent.
Maximum operating temperature is 90 °C.

Isolation voltage

DC isolation voltage: 1000 V.
Contacts are applied on the edge of the ring core, which is also the critical point for the winding operation.

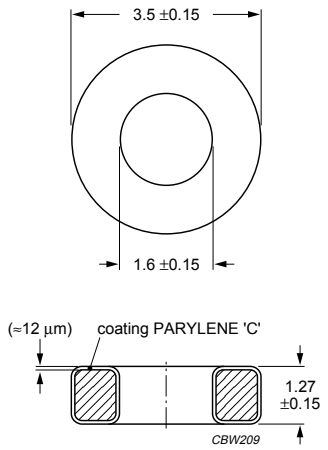

Dimensions (uncoated) in mm.

Fig.1 TC3.5/1.6/1.3 ring core.

Ring core data

GRADE	A_L (nH)	μ_i	TYPE NUMBER
3C11	862 ± 20%	≈ 4300	TC3.5/1.6/1.3-3C11

RING CORES (TOROIDS)

Effective core parameters

SYMBOL	PARAMETER	VALUE	UNIT
$\Sigma(l/A)$	core factor (C1)	7.44	mm^{-1}
V_e	effective volume	7.87	mm^3
l_e	effective length	7.65	mm
A_e	effective area	1.03	mm^2
m	mass of core	≈ 0.04	g

Coating

The cores are coated with parylene C, flame retardant in accordance with *"UL 94V-2"*; UL file number E 194397.
The coating is transparent.
Maximum operating temperature is 90 °C.

Isolation voltage

DC isolation voltage: 1000 V.
Contacts are applied on the edge of the ring core, which is also the critical point for the winding operation.

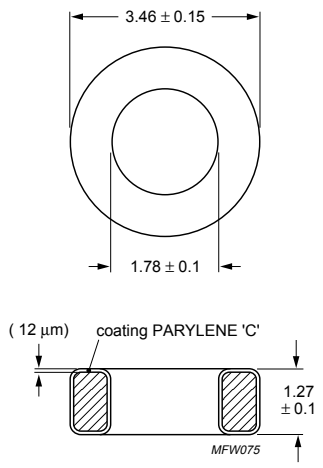

Dimensions (uncoated) in mm.

Fig.1 TC3.5/1.8/1.3 ring core.

Ring core data

GRADE	A_L (nH)	μ_i	TYPE NUMBER
3E27 des	930 ± 25%	≈ 5500	TC3.5/1.8/1.3-3E27

RING CORES (TOROIDS)

Effective core parameters

SYMBOL	PARAMETER	VALUE	UNIT
$\Sigma(l/A)$	core factor (C1)	5.31	mm^{-1}
V_e	effective volume	11.0	mm^3
l_e	effective length	7.65	mm
A_e	effective area	1.44	mm^2
m	mass of core	≈ 0.06	g

Coating

The cores are coated with parylene C, flame retardant in accordance with *"UL 94V-2"*; UL file number E 194397.
The coating is transparent.
Maximum operating temperature is 90 °C.

Isolation voltage

DC isolation voltage: 1000 V.
Contacts are applied on the edge of the ring core, which is also the critical point for the winding operation.

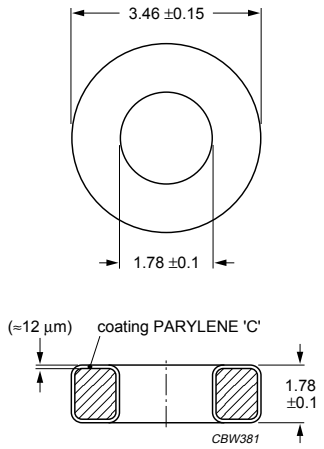

Dimensions (uncoated) in mm.

Fig.1 TC3.5/1.8/1.8 ring core.

Ring core data

GRADE	A_L (nH)	μ_i	TYPE NUMBER
3E28 des	950 ± 25%	≈ 4000	TC3.5/1.8/1.8-3E28

RING CORES (TOROIDS)

Effective core parameters

SYMBOL	PARAMETER	VALUE	UNIT
$\Sigma(l/A)$	core factor (C1)	4.73	mm^{-1}
V_e	effective volume	12.4	mm^3
l_e	effective length	7.6	mm
A_e	effective area	1.62	mm^2
m	mass of core	≈ 0.05	g

Coating

The cores are coated with parylene C, flame retardant in accordance with *"UL 94V-2"*; UL file number E 194397.
The coating is transparent.
Maximum operating temperature is 90 °C.

Isolation voltage

DC isolation voltage: 1000 V.
Contacts are applied on the edge of the ring core, which is also the critical point for the winding operation.

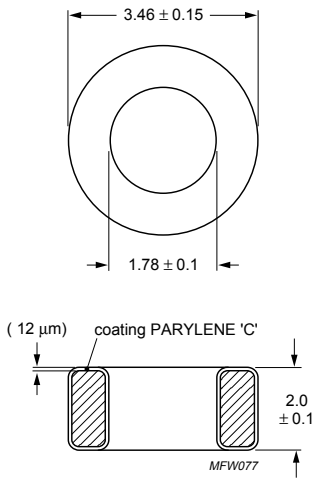

Dimensions (uncoated) in mm.

Fig.1 TC3.5/1.8/2 ring core.

Ring core data

GRADE	A_L (nH)	μ_i	TYPE NUMBER
3E28 des	1060 ± 25%	≈ 4000	TC3.5/1.8/2-3E28

RING CORES (TOROIDS)

Effective core parameters

SYMBOL	PARAMETER	VALUE	UNIT
$\Sigma(l/A)$	core factor (C1)	4.44	mm^{-1}
V_e	effective volume	14.8	mm^3
l_e	effective length	8.1	mm
A_e	effective area	1.83	mm^2
m	mass of core	≈ 0.086	g

Coating

The cores are coated with parylene C, flame retardant in accordance with *"UL 94V-2"*; UL file number E 194397.
The coating is transparent.
Maximum operating temperature is 90 °C.

Isolation voltage

DC isolation voltage: 1000 V.
Contacts are applied on the edge of the ring core, which is also the critical point for the winding operation.

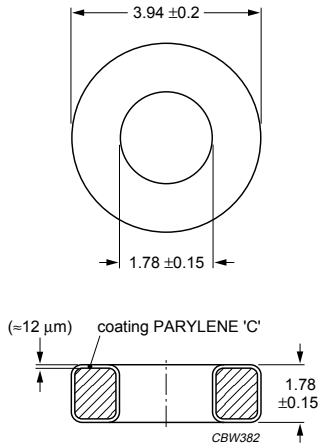

Dimensions (uncoated) in mm.

Fig.1 TC3.9/1.8/1.8 ring core.

Ring core data

GRADE	A_L (nH)	μ_i	TYPE NUMBER
3E28 des	1400 ± 30%	≈ 5000	TC3.9/1.8/1.8-3E28

RING CORES (TOROIDS)

Effective core parameters

SYMBOL	PARAMETER	VALUE	UNIT
Σ(l/A)	core factor (C1)	3.11	mm^{-1}
V_e	effective volume	21.1	mm^3
l_e	effective length	8.1	mm
A_e	effective area	2.6	mm^2
m	mass of core	≈ 0.12	g

Coating

The cores are coated with parylene C, flame retardant in accordance with *"UL 94V-2"*; UL file number E 194397.
The coating is transparent.
Maximum operating temperature is 90 °C.

Isolation voltage

DC isolation voltage: 1000 V.
Contacts are applied on the edge of the ring core, which is also the critical point for the winding operation.

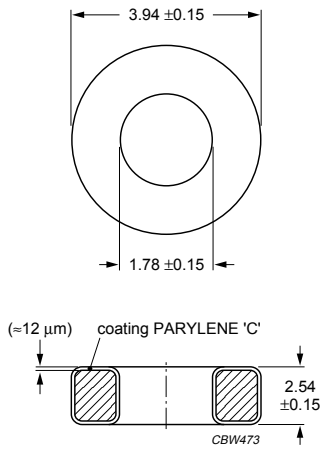

Dimensions (uncoated) in mm.

Fig.1 TC3.9/1.8/2.5 ring core.

Ring core data

GRADE	A_L (nH)	μ_i	TYPE NUMBER
3E28	2020 ± 30%	≈ 4000	TC3.9/1.8/2.5-3E28

RING CORES (TOROIDS)

Effective core parameters

SYMBOL	PARAMETER	VALUE	UNIT
$\Sigma(l/A)$	core factor (C1)	9.20	mm^{-1}
V_e	effective volume	9.20	mm^3
l_e	effective length	9.20	mm
A_e	effective area	1.00	mm^2
m	mass of core	≈ 0.045	g

Coating

The cores are coated with parylene C, flame retardant in accordance with *"UL 94V-2"*; UL file number E 194397.
The coating is transparent.
Maximum operating temperature is 90 °C.

Isolation voltage

DC isolation voltage: 1000 V.
Contacts are applied on the edge of the ring core, which is also the critical point for the winding operation.

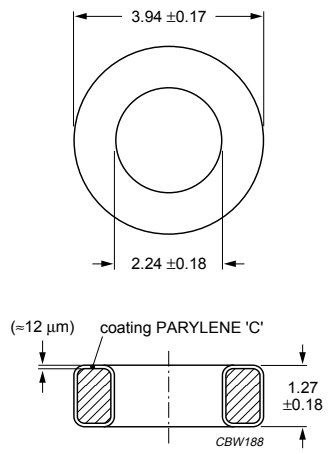

Dimensions (uncoated) in mm.

Fig.1 TC3.9/2.2/1.3 ring core.

Ring core data

GRADE	A_L (nH)	μ_i	TYPE NUMBER
3D3 sup	97 ± 20%	≈ 750	TC3.9/2.2/1.3-3D3
3B7 sup	325 ± 20%	≈ 2300	TC3.9/2.2/1.3-3B7
3E27	575 ± 20%	≈ 4100	TC3.9/2.2/1.3-3E27

RING CORES (TOROIDS)

Effective core parameters

SYMBOL	PARAMETER	VALUE	UNIT
$\Sigma(l/A)$	core factor (C1)	10.3	mm^{-1}
V_e	effective volume	6.43	mm^3
l_e	effective length	8.16	mm
A_e	effective area	0.79	mm^2
m	mass of core	≈ 0.035	g

Coating

The cores are coated with parylene C, flame retardant in accordance with *"UL 94V-2"*; UL file number E 194397.
The coating is transparent.
Maximum operating temperature is 90 °C.

Isolation voltage

DC isolation voltage: 1000 V.
Contacts are applied on the edge of the ring core, which is also the critical point for the winding operation.

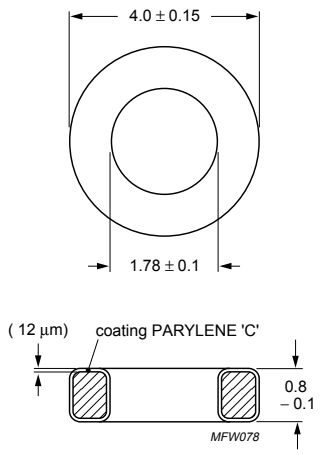

Dimensions (uncoated) in mm.

Fig.1 TC4/1.8/0.8 ring core.

Ring core data

GRADE	A_L (nH)	μ_i	TYPE NUMBER
3E28 des	486 ± 25%	≈ 4000	TC4/1.8/0.8-3E28

RING CORES (TOROIDS)

Effective core parameters

SYMBOL	PARAMETER	VALUE	UNIT
$\Sigma(l/A)$	core factor (C1)	4.54	mm^{-1}
V_e	effective volume	16.7	mm^3
l_e	effective length	8.71	mm
A_e	effective area	1.92	mm^2
m	mass of core	≈ 0.095	g

Coating

The cores are coated with parylene C, flame retardant in accordance with *"UL 94V-2"*; UL file number E 194397.
The coating is transparent.
Maximum operating temperature is 90 °C.

Isolation voltage

DC isolation voltage: 1000 V.
Contacts are applied on the edge of the ring core, which is also the critical point for the winding operation.

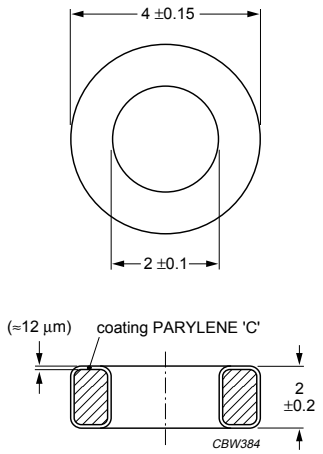

Dimensions (uncoated) in mm.

Fig.1 TC4/2/2 ring core.

Ring core data

GRADE	A_L (nH)	μ_i	TYPE NUMBER
3C11	1190 ± 25%	≈ 4300	TC4/2/2-3C11
3E28 des	1110 ± 25%	≈ 4000	TC4/2/2-3E28
3E27 des	1623 ± 20%	≈ 5500	TC4/2/2-3E27

RING CORES (TOROIDS)

Effective core parameters

SYMBOL	PARAMETER	VALUE	UNIT
$\Sigma(l/A)$	core factor (C1)	9.55	mm^{-1}
V_e	effective volume	8.82	mm^3
l_e	effective length	9.18	mm
A_e	effective area	0.961	mm^2
m	mass of core	≈ 0.04	g

Coating

The cores are coated with parylene C, flame retardant in accordance with *"UL 94V-2"*; UL file number E 194397.
The coating is transparent.
Maximum operating temperature is 90 °C.

Isolation voltage

DC isolation voltage: 1000 V.
Contacts are applied on the edge of the ring core, which is also the critical point for the winding operation.

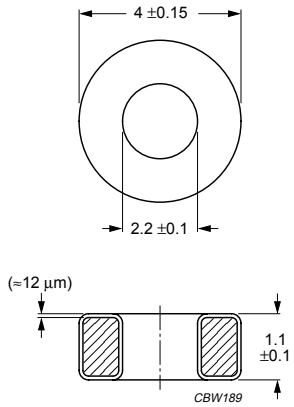

Dimensions (uncoated) in mm.

Fig.1 TC4/2.2/1.1 ring core.

Ring core data

GRADE	A_L (nH)	μ_i	TYPE NUMBER
4C65	16 ± 25%	≈ 125	TC4/2.2/1.1-4C65
4A11	92 ± 25%	≈ 700[1]	TC4/2.2/1.1-4A11
3F3	260 ± 25%	≈ 2000	TC4/2.2/1.1-3F3
3E25	725 ± 30%	≈ 5500	TC4/2.2/1.1-3E25
3E5	1120 ± 30%	≈ 8500	TC4/2.2/1.1-3E5
3E6 des	1315 ± 30%	≈ 10 000	TC4/2.2/1.1-3E6

1. Old permeability specification maintained.

RING CORES (TOROIDS)

Effective core parameters

SYMBOL	PARAMETER	VALUE	UNIT
$\Sigma(l/A)$	core factor (C1)	8.28	mm^{-1}
V_e	effective volume	10.2	mm^3
l_e	effective length	9.18	mm
A_e	effective area	1.11	mm^2
m	mass of core	≈ 0.05	g

Coating

The cores are coated with parylene C, flame retardant in accordance with *"UL 94V-2"*; UL file number E 194397.
The coating is transparent.
Maximum operating temperature is 90 °C.

Isolation voltage

DC isolation voltage: 1000 V.
Contacts are applied on the edge of the ring core, which is also the critical point for the winding operation.

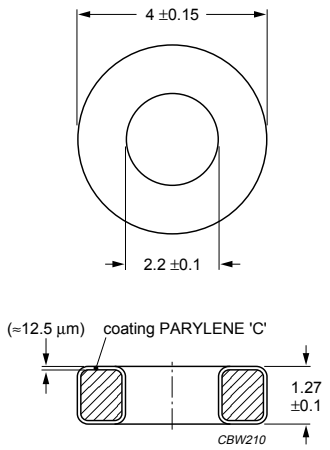

Dimensions (uncoated) in mm.

Fig.1 TC4/2.2/1.3 ring core.

Ring core data

GRADE	A_L (nH)	μ_i	TYPE NUMBER
4A11	122 ± 20%	≈ 800	TC4/2.2/1.3-4A11
3E25	720 ± 25%	≈ 5500	TC4/2.2/1.3-3E25

RING CORES (TOROIDS)

Effective core parameters

SYMBOL	PARAMETER	VALUE	UNIT
$\Sigma(l/A)$	core factor (C1)	6.56	mm^{-1}
V_e	effective volume	12.9	mm^3
l_e	effective length	9.18	mm
A_e	effective area	1.4	mm^2
m	mass of core	≈ 0.06	g

Coating

The cores are coated with parylene C, flame retardant in accordance with *"UL 94V-2"*; UL file number E 194397.
The coating is transparent.
Maximum operating temperature is 90 °C.

Isolation voltage

DC isolation voltage: 1000 V.
Contacts are applied on the edge of the ring core, which is also the critical point for the winding operation.

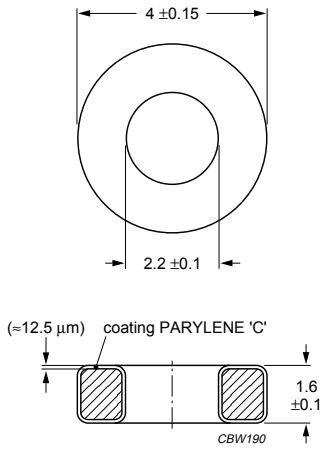

Dimensions (uncoated) in mm.

Fig.1 TC4/2.2/1.6 ring core.

Ring core data

GRADE	A_L (nH)	μ_i	TYPE NUMBER
4C65	24 ± 25%	≈ 125	TC4/2.2/1.6-4C65
4A11	134 ± 25%	≈ 700[1]	TC4/2.2/1.6-4A11
3S4 des	325 ± 25%	≈ 1700	TC4/2.2/1.6-3S4
3F3	380 ± 25%	≈ 2000	TC4/2.2/1.6-3F3
3E25	1050 ± 30%	≈ 5500	TC4/2.2/1.6-3E25
3E5	1630 ± 30%	≈ 8500	TC4/2.2/1.6-3E5
3E6 des	1915 ± 30%	≈ 10000	TC4/2.2/1.6-3E6

1. Old permeability specification maintained.

RING CORES (TOROIDS)

Effective core parameters

SYMBOL	PARAMETER	VALUE	UNIT
$\Sigma(l/A)$	core factor (C1)	5.89	mm^{-1}
V_e	effective volume	14.4	mm^3
l_e	effective length	9.18	mm
A_e	effective area	1.56	mm^2
m	mass of core	≈ 0.07	g

Coating

The cores are coated with parylene C, flame retardant in accordance with *"UL 94V-2"*; UL file number E 194397.
The coating is transparent.
Maximum operating temperature is 90 °C.

Isolation voltage

DC isolation voltage: 1000 V.
Contacts are applied on the edge of the ring core, which is also the critical point for the winding operation.

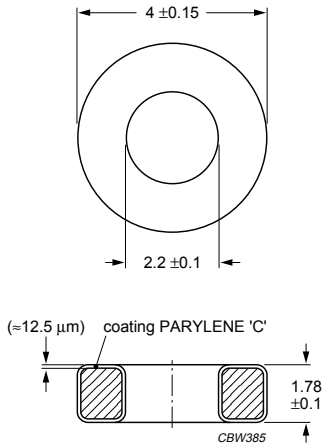

Dimensions (uncoated) in mm.

Fig.1 TC4/2.2/1.8 ring core.

Ring core data

GRADE	A_L (nH)	μ_i	TYPE NUMBER
3E6 des	2130 ± 30%	≈ 10000	TC4/2.2/1.8-3E6

RING CORES (TOROIDS)

Effective core parameters

SYMBOL	PARAMETER	VALUE	UNIT
$\Sigma(l/A)$	core factor (C1)	5.26	mm^{-1}
V_e	effective volume	16.1	mm^3
l_e	effective length	9.18	mm
A_e	effective area	1.75	mm^2
m	mass of core	≈ 0.08	g

Coating

The cores are coated with parylene C, flame retardant in accordance with *"UL 94V-2"*; UL file number E 194397.
The coating is transparent.
Maximum operating temperature is 90 °C.

Isolation voltage

DC isolation voltage: 1000 V.
Contacts are applied on the edge of the ring core, which is also the critical point for the winding operation.

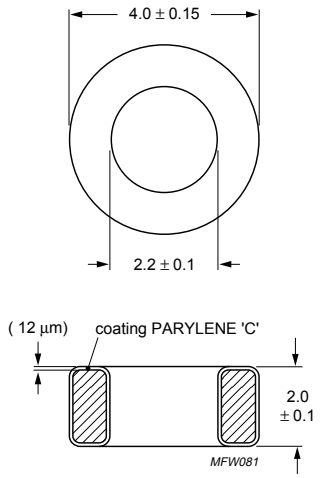

Dimensions (uncoated) in mm.

Fig.1 TC4/2.2/2 ring core.

Ring core data

GRADE	A_L (nH)	μ_i	TYPE NUMBER
3E25 des	1315 ± 30%	≈ 5500	TC4/2.2/2-3E25
3E8 des	3590 ± 30%	≈ 15000	TC4/2.2/2-3E8

RING CORES (TOROIDS)

Effective core parameters

SYMBOL	PARAMETER	VALUE	UNIT
$\Sigma(l/A)$	core factor (C1)	6.73	mm^{-1}
V_e	effective volume	15.5	mm^3
l_e	effective length	10.2	mm
A_e	effective area	1.52	mm^2
m	mass of core	≈ 0.09	g

Coating

The cores are coated with parylene C, flame retardant in accordance with *"UL 94V-2"*; UL file number E 194397.
The coating is transparent.
Maximum operating temperature is 90 °C.

Isolation voltage

DC isolation voltage: 1000 V.
Contacts are applied on the edge of the ring core, which is also the critical point for the winding operation.

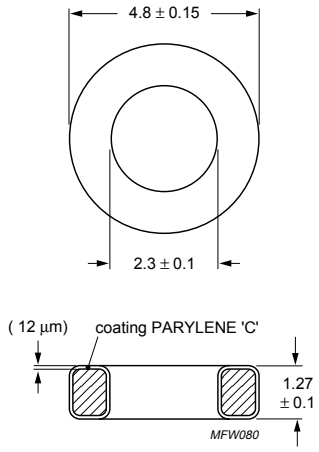

Dimensions (uncoated) in mm.

Fig.1 TC4.8/2.3/1.3 ring core.

Ring core data

GRADE	A_L (nH)	μ_i	TYPE NUMBER
3E27 des	1030 ± 25%	≈ 5500	TC4.8/2.3/1.3-3E27
3B7 sup	430 ± 20%	≈ 2300	TC4.8/2.3/1.3-3B7

RING CORES (TOROIDS)

Effective core parameters

SYMBOL	PARAMETER	VALUE	UNIT
$\Sigma(l/A)$	core factor (C1)	12.9	mm^{-1}
V_e	effective volume	13.2	mm^3
l_e	effective length	13.0	mm
A_e	effective area	1.01	mm^2
m	mass of core	≈ 0.07	g

Coating

The cores are coated with parylene C, flame retardant in accordance with *"UL 94V-2"*; UL file number E 194397.
The coating is transparent.
Maximum operating temperature is 90 °C.

Isolation voltage

DC isolation voltage: 1000 V.
Contacts are applied on the edge of the ring core, which is also the critical point for the winding operation.

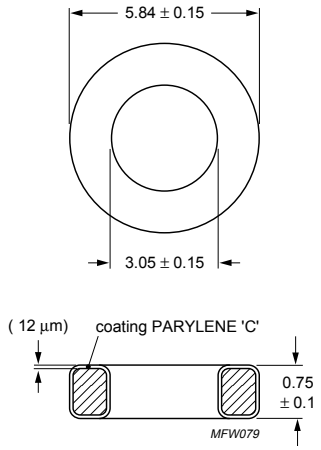

Dimensions (uncoated) in mm.

Fig.1 TC5.8/3.1/0.8 ring core.

Ring core data

GRADE	A_L (nH)	μ_i	TYPE NUMBER
3E28 des	390 ± 25%	≈ 4000	TC5.8/3.1/0.8-3E28

RING CORES (TOROIDS)

Effective core parameters

SYMBOL	PARAMETER	VALUE	UNIT
$\Sigma(l/A)$	core factor (C1)	6.52	mm^{-1}
V_e	effective volume	26.1	mm^3
l_e	effective length	13.0	mm
A_e	effective area	2.00	mm^2
m	mass of core	≈ 0.13	g

Coating

The cores are coated with parylene C, flame retardant in accordance with *"UL 94V-2"*; UL file number E 194397.
The coating is transparent.
Maximum operating temperature is 90 °C.

Isolation voltage

DC isolation voltage: 1000 V.
Contacts are applied on the edge of the ring core, which is also the critical point for the winding operation.

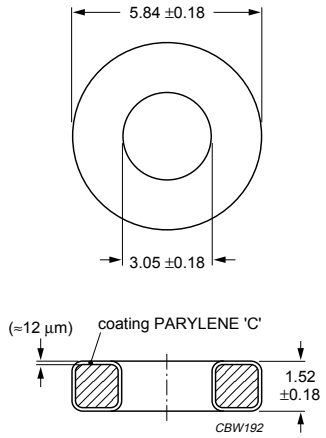

Dimensions (uncoated) in mm.

Fig.1 TC5.8/3.1/1.5 ring core.

Ring core data

GRADE	A_L (nH)	μ_i	TYPE NUMBER
4C65	25 ± 25%	≈ 125	TC5.8/3.1/1.5-4C65
4B1 des	50 ± 25%	≈ 250	TC5.8/3.1/1.5-4B1
3B7 sup	450 ± 20%	≈ 2300	TC5.8/3.1/1.5-3B7(1)
3E27	890 ± 20%	≈ 4600	TC5.8/3.1/1.5-3E27
3E6	1960 ± 30%	≈ 9925	TC5.8/3.1/1.5-3E6
3E8 des	2940 ± 30%	≈ 15000	TC5.8/3.1/1.5-3E8

Note

1. OD = 6 ± 0.18

RING CORES (TOROIDS)

Effective core parameters

SYMBOL	PARAMETER	VALUE	UNIT
$\Sigma(l/A)$	core factor (C1)	3.04	mm^{-1}
V_e	effective volume	55.8	mm^3
l_e	effective length	13.0	mm
A_e	effective area	4.28	mm^2
m	mass of core	≈ 0.31	g

Coating

The cores are coated with parylene C, flame retardant in accordance with *"UL 94V-2"*; UL file number E 194397.
The coating is transparent.
Maximum operating temperature is 90 °C.

Isolation voltage

Dc isolation voltage: 1000 V.
Contacts are applied on the edge of the ring core, which is also the critical point for the winding operation.

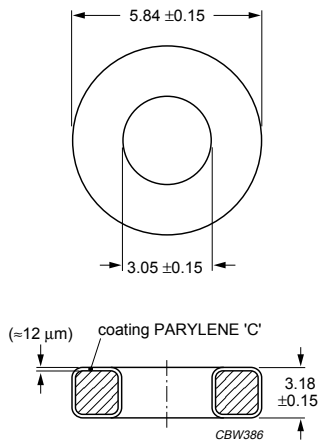

Dimensions (uncoated) in mm.

Fig.1 TC5.8/3.1/3.2 ring core.

Ring core data

GRADE	A_L (nH)	μ_i	TYPE NUMBER
3D3 des	310 ± 20%	≈ 750	TC5.8/3.1/3.2-3D3
3B7 sup	940 ± 25%	≈ 2300	TC5.8/3.1/3.2-3B7[1]
3E28 des	1650 ± 25%	≈ 4000	TC5.8/3.1/3.2-3E28
3E6 des	4130 ± 30%	≈ 10000	TC5.8/3.1/3.2-3E6

Note

1. Dimensions with coating.

RING CORES (TOROIDS)

Effective core parameters

SYMBOL	PARAMETER	VALUE	UNIT
$\Sigma(l/A)$	core factor (C1)	3.16	mm^{-1}
V_e	effective volume	53.8	mm^3
l_e	effective length	13.0	mm
A_e	effective area	4.12	mm^2
m	mass of core	≈ 0.14	g

Coating

The cores are coated with parylene C, flame retardant in accordance with *"UL 94V-2"*; UL file number E 194397.
The coating is transparent.
Maximum operating temperature is 90 °C.

Isolation voltage

DC isolation voltage: 1000 V.
Contacts are applied on the edge of the ring core, which is also the critical point for the winding operation.

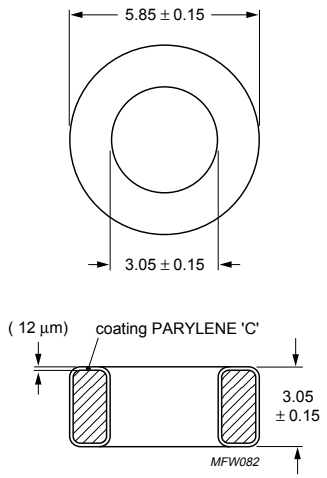

Dimensions (uncoated) in mm.

Fig.1 TC5.9/3.1/3.1 ring core.

Ring core data

GRADE	A_L (nH)	μ_i	TYPE NUMBER
3E6 des	3960 ± 30%	≈ 10000	TC5.9/3.1/3.1-3E6

RING CORES (TOROIDS)

Effective core parameters

SYMBOL	PARAMETER	VALUE	UNIT
$\Sigma(l/A)$	core factor (C1)	7.75	mm^{-1}
V_e	effective volume	30.2	mm^3
l_e	effective length	15.3	mm
A_e	effective area	1.97	mm^2
m	mass of core	≈ 0.15	g

Coating

The cores are coated with parylene C, flame retardant in accordance with *"UL 94V-2"*; UL file number E 194397.
The coating is transparent.
Maximum operating temperature is 90 °C.

Isolation voltage

DC isolation voltage: 1000 V.
Contacts are applied on the edge of the ring core, which is also the critical point for the winding operation.

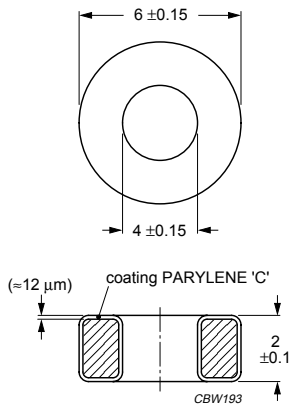

Dimensions (uncoated) in mm.

Fig.1 TC6/4/2 ring core.

Ring core data

GRADE	A_L (nH)	μ_i	TYPE NUMBER
4C65	20 ± 25%	≈ 125	TC6/4/2-4C65
4A11	114 ± 25%	≈ 700[1]	TC6/4/2-4A11
3S4 des	275 ± 25%	≈ 1700	TC6/4/2-3S4
3F3	325 ± 25%	≈ 2000	TC6/4/2-3F3
3E25	890 ± 30%	≈ 5500	TC6/4/2-3E25
3E5	1380 ± 30%	≈ 8500	TC6/4/2-3E5
3E6 des	1620 ± 30%	≈ 10000	TC6/4/2-3E6

1. Old permeability specification maintained.

RING CORES (TOROIDS)

Effective core parameters

SYMBOL	PARAMETER	VALUE	UNIT
$\Sigma(l/A)$	core factor (C1)	5.17	mm^{-1}
V_e	effective volume	45.2	mm^3
l_e	effective length	15.3	mm
A_e	effective area	2.96	mm^2
m	mass of core	≈ 0.23	g

Coating

The cores are coated with parylene C, flame retardant in accordance with *"UL 94V-2"*; UL file number E 194397.
The coating is transparent.
Maximum operating temperature is 90 °C.

Isolation voltage

DC isolation voltage: 1000 V.
Contacts are applied on the edge of the ring core, which is also the critical point for the winding operation.

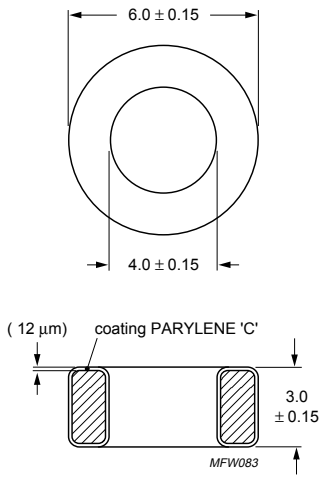

Dimensions (uncoated) in mm.

Fig.1 TC6/4/3 ring core.

Ring core data

GRADE	A_L (nH)	μ_i	TYPE NUMBER
3E6 des	2430 ± 30%	≈ 10000	TC6/4/3-3E6

RING CORES (TOROIDS)

Effective core parameters

SYMBOL	PARAMETER	VALUE	UNIT
Σ(l/A)	core factor (C1)	4.97	mm^{-1}
V_e	effective volume	46.5	mm^3
l_e	effective length	15.2	mm
A_e	effective area	3.06	mm^2
m	mass of core	≈ 0.23	g

Coating

The cores are coated with parylene C, flame retardant in accordance with *"UL 94V-2"*; UL file number E 194397.
The coating is transparent.
Maximum operating temperature is 90 °C.

Isolation voltage

DC isolation voltage: 1000 V.
Contacts are applied on the edge of the ring core, which is also the critical point for the winding operation.

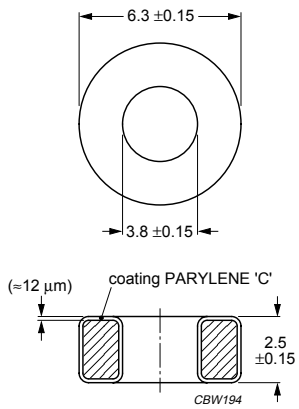

Dimensions (uncoated) in mm.

Fig.1 TC6.3/3.8/2.5 ring core.

Ring core data

GRADE	A_L (nH)	μ_i	TYPE NUMBER
4A11	177 ± 25%	≈ 700[1]	TC6.3/3.8/2.5-4A11
3F3	500 ± 25%	≈ 2000	TC6.3/3.8/2.5-3F3
3E25	1390 ± 30%	≈ 5500	TC6.3/3.8/2.5-3E25
3E5	2150 ± 30%	≈ 8500	TC6.3/3.8/2.5-3E5
3E6 des	2530 ± 30%	≈ 10000	TC6.3/3.8/2.5-3E6
3E7 des	3600 + 30/− 40%	≈ 12000	TC6.3/3.8/2.5-3E7

1. Old permeability specification maintained.

RING CORES (TOROIDS)

Effective core parameters

SYMBOL	PARAMETER	VALUE	UNIT
$\Sigma(l/A)$	core factor (C1)	1.51	mm^{-1}
V_e	effective volume	148	mm^3
l_e	effective length	15.0	mm
A_e	effective area	9.92	mm^2
m	mass of core	≈ 0.7	g

Coating

The cores are coated with parylene C, flame retardant in accordance with *"UL 94V-2"*; UL file number E 194397.
The coating is transparent.
Maximum operating temperature is 90 °C.

Isolation voltage

DC isolation voltage: 1000 V.
Contacts are applied on the edge of the ring core, which is also the critical point for the winding operation.

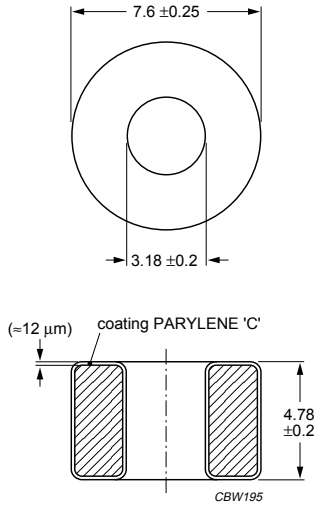

Dimensions (uncoated) in mm.

Fig.1 TC7.6/3.2/4.8 ring core.

Ring core data

GRADE	A_L (nH)	μ_i	TYPE NUMBER
3C90	1915 ±25%	≈ 2300	TC7.6/3.2/4.8-3C90
3E28 des	3800 ±30%	≈ 4000	TC7.6/3.2/4.8-3E28
3E6 des	8360 ±30%	≈ 10000	TC7.6/3.2/4.8-3E6
3E8 des	12500 ±30%	≈ 15000	TC7.6/3.2/4.8-3E8

RING CORES (TOROIDS)

Effective core parameters

SYMBOL	PARAMETER	VALUE	UNIT
$\Sigma(l/A)$	core factor (C1)	1.41	mm^{-1}
V_e	effective volume	160	mm^3
l_e	effective length	15.0	mm
A_e	effective area	10.6	mm^2
m	mass of core	≈ 0.75	g

Coating

The cores are coated with parylene C, flame retardant in accordance with *"UL 94V-2"*; UL file number E 194397.
The coating is transparent.
Maximum operating temperature is 90 °C.

Isolation voltage

DC isolation voltage: 1000 V.
Contacts are applied on the edge of the ring core, which is also the critical point for the winding operation.

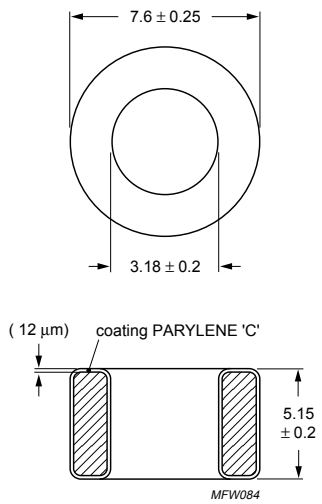

Dimensions (uncoated) in mm.

Fig.1 TC7.6/3.2/5.2 ring core.

Ring core data

GRADE	A_L (nH)	μ_i	TYPE NUMBER
3E28 des	3580 ± 25%	≈ 4000	TC7.6/3.2/5.2-3E28

RING CORES (TOROIDS)

Effective core parameters

SYMBOL	PARAMETER	VALUE	UNIT
$\Sigma(l/A)$	core factor (C1)	1.99	mm^{-1}
V_e	effective volume	144	mm^3
l_e	effective length	16.9	mm
A_e	effective area	8.5	mm^2
m	mass of core	≈ 0.7	g

Coating

The cores are coated with parylene C, flame retardant in accordance with *"UL 94V-2"*; UL file number E 194397.
The coating is transparent.
Maximum operating temperature is 90 °C.

Isolation voltage

DC isolation voltage: 1000 V.
Contacts are applied on the edge of the ring core, which is also the critical point for the winding operation.

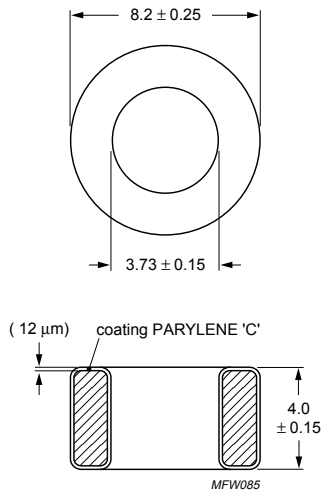

Dimensions (uncoated) in mm.

Fig.1 TC8.2/3.7/4 ring core.

Ring core data

GRADE	A_L (nH)	μ_i	TYPE NUMBER
4A11 des	440 ± 25%	≈ 700[1]	TC8.2/3.7/4-4A11
3E7 des	7560 ± 30%	≈ 12000	TC8.2/3.7/4-3E7

1. Old permeability specification maintained.

RING CORES (TOROIDS)

Effective core parameters

SYMBOL	PARAMETER	VALUE	UNIT
$\Sigma(l/A)$	core factor (C1)	5.17	mm^{-1}
V_e	effective volume	102	mm^3
l_e	effective length	22.9	mm
A_e	effective area	4.44	mm^2
m	mass of core	≈ 0.5	g

Coating

The cores are coated with parylene C, flame retardant in accordance with *"UL 94V-2"*; UL file number E 194397.
The coating is transparent.
Maximum operating temperature is 90 °C.

Isolation voltage

DC isolation voltage: 1000 V.
Contacts are applied on the edge of the ring core, which is also the critical point for the winding operation.

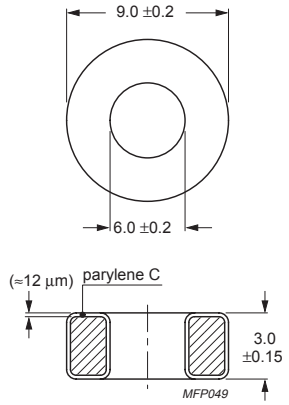

Dimensions in mm.

Fig.1 TC9/6/3 ring core.

Ring core data

GRADE	A_L (nH)	μ_i	TYPE NUMBER
3E5	2070 ± 30%	≈ 8500	TC9/6/3-3E5
3E6 des	2435 ± 30%	≈ 10000	TC9/6/3-3E6

Tag plate

General data

PARAMETER	SPECIFICATION
Tag plate material	liquid crystal polymer (LCP), glass reinforced, flame retardant in accordance with *"UL 94V-0"*; UL file number E54705
Solder pad material	copper-tin alloy (CuSn), tin (Sn) plated
Maximum operating temperature	155 °C, *"IEC 60085"*, class F
Resistance to soldering heat	*"IEC 60068-2-20"*, Part 2, Test Tb, method 1B: 350 °C, 3.5 s
Solderability	*"IEC 60068-2-20"*, Part 2, Test Ta, method 1: 235 °C, 2 s

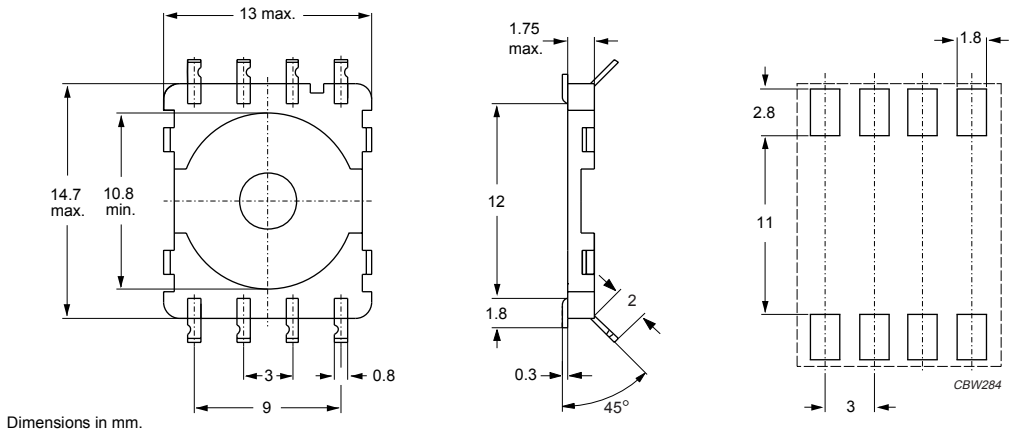

Fig.2 TC9/6/3 tag plate (SMD); 8-solder pads.

Type number information for TC9/6/3 tag plate (SMD) with 8 solder pads

NUMBER OF SOLDER PADS	TYPE NUMBER
8	TGPS-9-8P-Z

Cover data

PARAMETER	SPECIFICATION
Cover material	polyamide (PA4.6) glass reinforced, flame retardant in accordance with *"UL 94V-0"*
Maximium operating temperature	130 °C, *"IEC 60085"* class B
Type number	COV-9

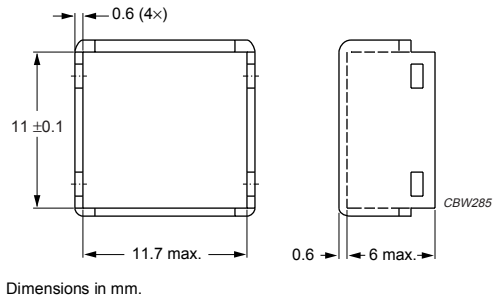

Fig.3 TC9/6/3 cover.

RING CORES (TOROIDS)

Effective core parameters

SYMBOL	PARAMETER	VALUE	UNIT
$\Sigma(l/A)$	core factor (C1)	5.17	mm^{-1}
V_e	effective volume	102	mm^3
l_e	effective length	22.9	mm
A_e	effective area	4.44	mm^2
m	mass of core	≈ 0.5	g

Coating

The cores are coated with polyamide 11 (PA11), flame retardant in accordance with *"UL 94V-2"*; UL file number E 45228 (M).
The colour is white.
Maximum operating temperature is 160 °C.

Isolation voltage

DC isolation voltage: 1000 V.
Contacts are applied on the edge of the ring core, which is also the critical point for the winding operation.

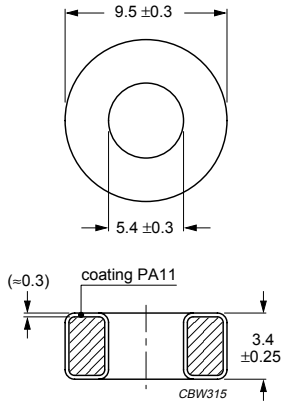

Dimensions in mm.

Fig.1 TN9/6/3 ring core.

Ring core data

GRADE	A_L (nH)	μ_i	TYPE NUMBER
4C65	30 ± 25%	≈ 125	TN9/6/3-4C65
4A11	170 ± 25%	≈ 700[1]	TN9/6/3-4A11
3R1[2]	–	≈ 800	TN9/6/3-3R1
3F3	440 ± 25%	≈ 1800	TN9/6/3-3F3
3C90	560 ± 25%	≈ 2300	TN9/6/3-3C90
3E25	1340 ± 30%	≈ 5500	TN9/6/3-3E25

1. Old permeability specification maintained.
2. Due to the rectangular BH-loop of 3R1, inductance values strongly depend on the magnetic state of the ring core and measuring conditions. Therefore no A_L value is specified. For the application in magnetic amplifiers A_L is not a critical parameter.

WARNING
Do not use 3R1 cores close to their mechanical resonant frequency. For more information refer to *"3R1"* material specification in this data handbook.

Tag plate

General data

PARAMETER	SPECIFICATION
Tag plate material	liquid crystal polymer (LCP), glass reinforced, flame retardant in accordance with *"UL 94V-0"*; UL file number E54705
Solder pad material	copper-tin alloy (CuSn), tin (Sn) plated
Maximum operating temperature	155 °C, *"IEC 60085"*, class F
Resistance to soldering heat	*"IEC 60068-2-20"*, Part 2, Test Tb, method 1B: 350 °C, 3.5 s
Solderability	*"IEC 60068-2-20"*, Part 2, Test Ta, method 1: 235 °C, 2 s

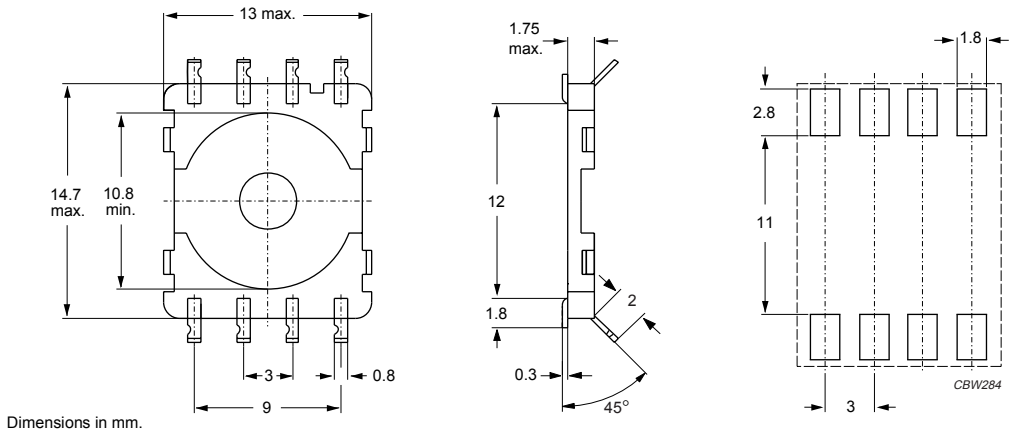

Fig.2 TN9/6/3 tag plate (SMD); 8-solder pads.

Type number information for TN9/6/3 tag plate (SMD) with 8 solder pads

NUMBER OF SOLDER PADS	TYPE NUMBER
8	TGPS-9-8P-Z

Cover data

PARAMETER	SPECIFICATION
Cover material	polyamide (PA4.6) glass reinforced, flame retardant in accordance with *"UL 94V-0"*
Maximium operating temperature	130 °C, *"IEC 60085"* class B
Type number	COV-9

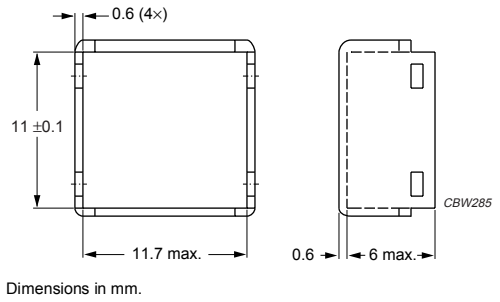

Fig.3 TN9/6/3 cover.

RING CORES (TOROIDS)

Effective core parameters

SYMBOL	PARAMETER	VALUE	UNIT
$\Sigma(l/A)$	core factor (C1)	5.17	mm^{-1}
V_e	effective volume	102	mm^3
l_e	effective length	22.9	mm
A_e	effective area	4.44	mm^2
m	mass of core	≈ 0.5	g

Coating

The cores are coated with epoxy, flame retardant in accordance with *"UL 94V-0"*; UL file number E 228348.
The colour is white.
Maximum operating temperature is 200 °C.

Isolation voltage

DC isolation voltage: 1000 V.
Contacts are applied on the edge of the ring core, which is also the critical point for the winding operation.

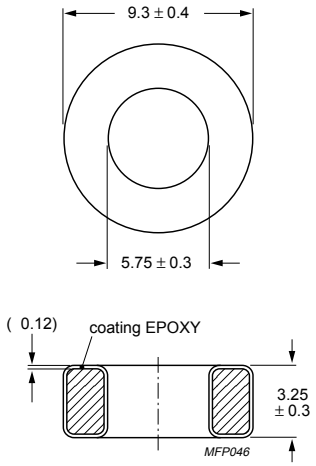

Dimensions in mm.

Fig.1 TX9/6/3 ring core.

Ring core data

GRADE	A_L (nH)	μ_i	TYPE NUMBER
3E25	1340 ± 30%	≈ 5500	TX9/6/3-3E25
3E5	2070 ± 30%	≈ 8500	TX9/6/3-3E5

Tag plate

General data

PARAMETER	SPECIFICATION
Tag plate material	liquid crystal polymer (LCP), glass reinforced, flame retardant in accordance with *"UL 94V-0"*; UL file number E54705
Solder pad material	copper-tin alloy (CuSn), tin (Sn) plated
Maximum operating temperature	155 °C, *"IEC 60085"*, class F
Resistance to soldering heat	*"IEC 60068-2-20"*, Part 2, Test Tb, method 1B: 350 °C, 3.5 s
Solderability	*"IEC 60068-2-20"*, Part 2, Test Ta, method 1: 235 °C, 2 s

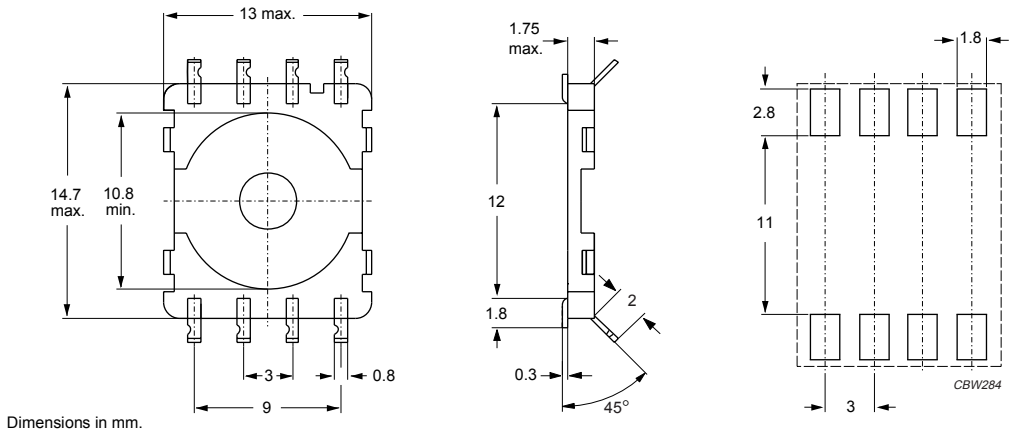

Fig.2 TX9/6/3 tag plate (SMD); 8-solder pads.

Type number information for TX9/6/3 tag plate (SMD) with 8 solder pads

NUMBER OF SOLDER PADS	TYPE NUMBER
8	TGPS-9-8P-Z

Cover data

PARAMETER	SPECIFICATION
Cover material	polyamide (PA4.6) glass reinforced, flame retardant in accordance with *"UL 94V-0"*
Maximium operating temperature	130 °C, *"IEC 60085"* class B
Type number	COV-9

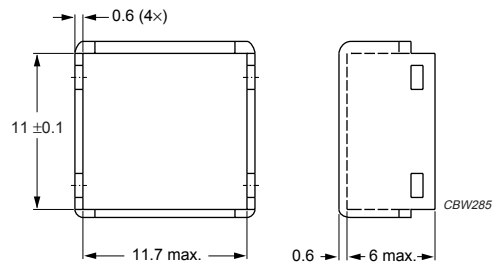

Fig.3 TX9/6/3 cover.

RING CORES (TOROIDS)

Effective core parameters

SYMBOL	PARAMETER	VALUE	UNIT
$\Sigma(l/A)$	core factor (C1)	2.98	mm^{-1}
V_e	effective volume	144	mm^3
l_e	effective length	20.7	mm
A_e	effective area	6.95	mm^2
m	mass of core	≈ 0.7	g

Coating

The cores are coated with parylene C, flame retardant in accordance with *"UL 94V-2"*; UL file number E 194397.
The coating is transparent.
Maximum operating temperature is 90 °C.

Isolation voltage

DC isolation voltage: 1000 V.
Contacts are applied on the edge of the ring core, which is also the critical point for the winding operation.

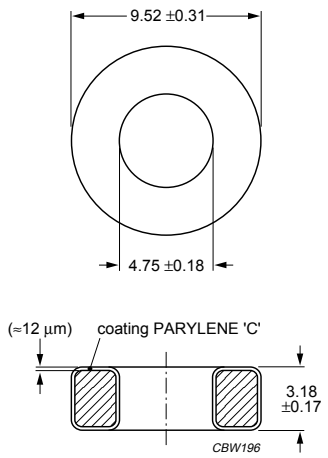

Dimensions in mm.

Fig.1 TC9.5/4.8/3.2 ring core.

Ring core data

GRADE	A_L (nH)	μ_i	TYPE NUMBER
3D3 sup	330 ± 20%	≈ 750	TC9.5/4.8/3.2-3D3
3F3	890 ± 25%	≈ 2000	TC9.5/4.8/3.2-3F3(1)
3B7 sup	1000 ± 20%	≈ 2300	TC9.5/4.8/3.2-3B7
3C81	1200 ± 20%	≈ 2700	TC9.5/4.8/3.2-3C81
3E27	2135 ± 20%	≈ 4900	TC9.5/4.8/3.2-3E27
3E6 des	4390 ± 30%	≈ 10100	TC9.5/4.8/3.2-3E6(1)
3E7 des	5323 ± 30%	≈ 12000	TC9.5/4.8/3.2-3E7(1)
3E8 des	6590 ± 30%	≈ 15000	TC9.5/4.8/3.2-3E8(1)

Note

1. Dimensions with coating.

Ferrite toroids TN10/6/4

RING CORES (TOROIDS)

Effective core parameters

SYMBOL	PARAMETER	VALUE	UNIT
$\Sigma(l/A)$	core factor (C1)	3.07	mm^{-1}
V_e	effective volume	188	mm^3
l_e	effective length	24.1	mm
A_e	effective area	7.8	mm^2
m	mass of core	≈ 0.95	g

Coating

The cores are coated with polyamide 11 (PA11), flame retardant in accordance with *"UL 94V-2"*; UL file number E 45228 (M). The colour is white.
Maximum operating temperature is 160 °C.

Isolation voltage

DC isolation voltage: 1000 V.
Contacts are applied on the edge of the ring core, which is also the critical point for the winding operation.

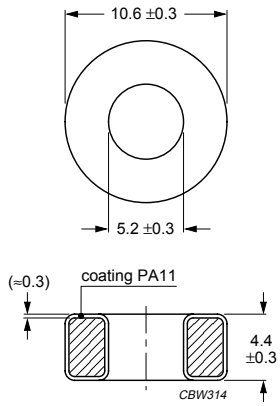

Dimensions in mm.

Fig.1 TN10/6/4 ring core.

Ring core data

GRADE	A_L (nH)	μ_i	TYPE NUMBER
4C65	52 ± 25%	≈ 125	TN10/6/4-4C65
4A11	286 ± 25%	≈ 700[1]	TN10/6/4-4A11
3D3	306 ± 25%	≈ 750	TN10/6/4-3D3
3R1[2]	-	≈ 800	TN10/6/4-3R1
3F3	740 ± 25%	≈ 1800	TN10/6/4-3F3
3C90	940 ± 25%	≈ 2300	TN10/6/4-3C90
3C11	1750 ± 25%	≈ 4300	TN10/6/4-3C11
3E25	2250 ± 30%	≈ 5500	TN10/6/4-3E25

1. Old permeability specification maintained.
2. Due to the rectangular BH-loop of 3R1, inductance values strongly depend on the magnetic state of the ring core and measuring conditions. Therefore no A_L value is specified. For the application in magnetic amplifiers A_L is not a critical parameter.

WARNING
Do not use 3R1 cores close to their mechanical resonant frequency. For more information refer to *"3R1"* material specification in this data handbook.

Properties of cores under power conditions

GRADE	B (mT) at	CORE LOSS (W) at		
	H = 250 A/m; f = 25 kHz; T = 100 °C	f = 25 kHz; $\hat{B}$ = 200 mT; T = 100 °C	f = 100 kHz; $\hat{B}$ = 100 mT; T = 100 °C	f = 400 kHz; $\hat{B}$ = 50 mT; T = 100 °C
3C90	≥320	≤ 0.021	≤ 0.021	–
3F3	≥320	–	≤ 0.03	≤ 0.04

RING CORES (TOROIDS)

Effective core parameters

SYMBOL	PARAMETER	VALUE	UNIT
$\Sigma(l/A)$	core factor (C1)	3.07	mm^{-1}
V_e	effective volume	188	mm^3
l_e	effective length	24.1	mm
A_e	effective area	7.8	mm^2
m	mass of core	≈ 0.95	g

Coating

The cores are coated with epoxy, flame retardant in accordance with *"UL 94V-0"*; UL file number E 228348.
The colour is white.
Maximum operating temperature is 200 °C.

Isolation voltage

DC isolation voltage: 1000 V.
Contacts are applied on the edge of the ring core, which is also the critical point for the winding operation.

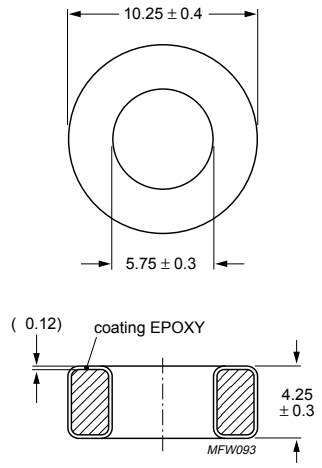

Dimensions in mm.

Fig.1 TX10/6/4 ring core.

Ring core data

GRADE	A_L (nH)	μ_i	TYPE NUMBER
3E5	3470 ± 30%	≈ 8500	TX10/6/4-3E5
3E6 des	4085 ± 30%	≈ 10000	TX10/6/4-3E6

RING CORES (TOROIDS)

Effective core parameters

SYMBOL	PARAMETER	VALUE	UNIT
$\Sigma(l/A)$	core factor (C1)	2.40	mm^{-1}
V_e	effective volume	361	mm^3
l_e	effective length	29.5	mm
A_e	effective area	12.3	mm^2
m	mass of core	≈ 1.8	g

Coating

The cores are coated with epoxy, flame retardant in accordance with *"UL 94V-0"*; UL file number E 228348.
The colour is white.
Maximum operating temperature is 200 °C.

Isolation voltage

DC isolation voltage: 1500 V.
Contacts are applied on the edge of the ring core, which is also the critical point for the winding operation.

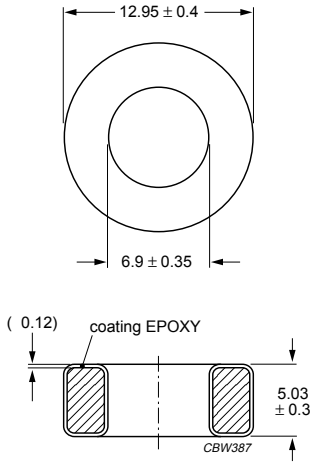

Dimensions in mm.

Fig.1 TX13/7.1/4.8 ring core.

Ring core data

GRADE	A_L (nH)	μ_i	TYPE NUMBER
3D3 sup	415 ± 20%	≈ 750	TX13/7.1/4.8-3D3
3F3	990 ± 20%	≈ 1800	TX13/7.1/4.8-3F3
3C90	1260 ± 20%	≈ 2300	TX13/7.1/4.8-3C90
3C81	1475 ± 20%	≈ 2700	TX13/7.1/4.8-3C81
3E27	2750 ± 20%	≈ 5000	TX13/7.1/4.8-3E27
3E6 des	5400 ± 30%	≈ 10400	TX13/7.1/4.8-3E6

Properties of cores under power conditions

GRADE	B (mT) at	CORE LOSS (W) at		
	H = 250 A/m; f = 25 kHz; T = 100 °C	f = 25 kHz; $\hat{B}$ = 200 mT; T = 100 °C	f = 100 kHz; $\hat{B}$ = 100 mT; T = 100 °C	f = 400 kHz; $\hat{B}$ = 50 mT; T = 100 °C
3C81	≥320	≤ 0.08	–	–
3C90	≥320	≤ 0.036	≤ 0.036	–
3F3	≥320	–	≤ 0.04	≤ 0.07

Ferrite toroids TN13/7.5/5

RING CORES (TOROIDS)

Effective core parameters

SYMBOL	PARAMETER	VALUE	UNIT
$\Sigma(l/A)$	core factor (C1)	2.46	mm^{-1}
V_e	effective volume	368	mm^3
l_e	effective length	30.1	mm
A_e	effective area	12.2	mm^2
m	mass of core	≈ 1.8	g

Coating

The cores are coated with polyamide 11 (PA11), flame retardant in accordance with *"UL 94V-2"*; UL file number E 45228 (M). The colour is white.
Maximum operating temperature is 160 °C.

Isolation voltage

DC isolation voltage: 1500 V.
Contacts are applied on the edge of the ring core, which is also the critical point for the winding operation.

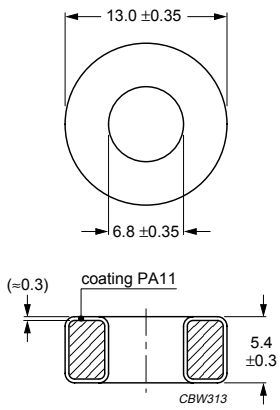

Dimensions in mm.

Fig.1 TN13/7.5/5 ring core.

Ring core data

GRADE	A_L (nH)	μ_i	TYPE NUMBER
4C65	64 ± 25%	≈ 125	TN13/7.5/5-4C65
4A11	358 ± 25%	≈ 700[1]	TN13/7.5/5-4A11
3F4	460 ± 25%	≈ 900	TN13/7.5/5-3F4
4A15	610 ± 25%	≈ 1200	TN13/7.5/5-4A15
3F3	900 ± 25%	≈ 1800	TN13/7.5/5-3F3
3C90	1170 ± 25%	≈ 2300	TN13/7.5/5-3C90
3C11	2200 ± 25%	≈ 4300	TN13/7.5/5-3C11
3E25	2810 ± 30%	≈ 5500	TN13/7.5/5-3E25
3R1[2]	–	–	TN13/7.5/5-3R1

1. Old permeability specification maintained.
2. Due to the rectangular BH-loop of 3R1, inductance values strongly depend on the magnetic state of the ring core and measuring conditions. Therefore no A_L value is specified. For the application in magnetic amplifiers A_L is not a critical parameter.

WARNING
Do not use 3R1 cores close to their mechanical resonant frequency. For more information refer to *"3R1"* material specification in this data handbook.

Properties of cores under power conditions

GRADE	B (mT) at	CORE LOSS (W) at		
	H = 250 A/m; f = 25 kHz; T = 100 °C	f = 25 kHz; $\hat{B}$ = 200 mT; T = 100 °C	f = 100 kHz; $\hat{B}$ = 100 mT; T = 100 °C	f = 400 kHz; $\hat{B}$ = 50 mT; T = 100 °C
3C90	≥320	≤ 0.041	≤ 0.041	–
3F3	≥320	–	≤ 0.04	≤ 0.07

RING CORES (TOROIDS)

Effective core parameters

SYMBOL	PARAMETER	VALUE	UNIT
$\Sigma(l/A)$	core factor (C1)	2.46	mm^{-1}
V_e	effective volume	368	mm^3
l_e	effective length	30.1	mm
A_e	effective area	12.2	mm^2
m	mass of core	≈ 1.8	g

Coating

The cores are coated with epoxy, flame retardant in accordance with *"UL 94V-0"*; UL file number E 228348.
The colour is white.
Maximum operating temperature is 200 °C.

Isolation voltage

DC isolation voltage: 1500 V.
Contacts are applied on the edge of the ring core, which is also the critical point for the winding operation.

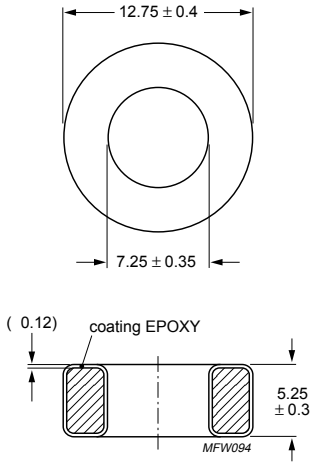

Dimensions in mm.

Fig.1 TX13/7.5/5 ring core.

Ring core data

GRADE	A_L (nH)	μ_i	TYPE NUMBER
3E5	4340 ± 30%	≈ 8500	TX13/7.5/5-3E5
3E6 des	5095 ± 30%	≈ 10000	TX13/7.5/5-3E6

RING CORES (TOROIDS)

Effective core parameters

SYMBOL	PARAMETER	VALUE	UNIT
Σ(l/A)	core factor (C1)	2.21	mm^{-1}
V_e	effective volume	442	mm^3
l_e	effective length	31.2	mm
A_e	effective area	14.1	mm^2
m	mass of core	≈ 2.2	g

Coating

The cores are coated with epoxy, flame retardant in accordance with *"UL 94V-0"*; UL file number E 228348.
The colour is white.
Maximum operating temperature is 200 °C.

Isolation voltage

DC isolation voltage: 1500 V.
Contacts are applied on the edge of the ring core, which is also the critical point for the winding operation.

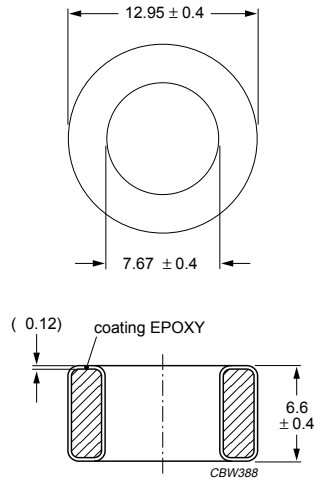

Dimensions in mm.

Fig.1 TX13/7.9/6.4 ring core.

Ring core data

GRADE	A_L (nH)	μ_i	TYPE NUMBER
4C65	75 ± 25%	≈ 125	TX13/7.9/6.4-4C65
3F3	1100 ± 20%	≈ 1800	TX13/7.9/6.4-3F3
3C90	1380 ± 20%	≈ 2300	TX13/7.9/6.4-3C90
3C81	1620 ± 20%	≈ 2700	TX13/7.9/6.4-3C81
3E27	3000 ± 20%	≈ 5000	TX13/7.9/6.4-3E27
3E25 des	3000 ± 20%	≈ 5000	TX13/7.9/6.4-3E25
3E6	5900 ± 30%	≈ 10600	TX13/7.9/6.4-3E6

Properties of cores under power conditions

GRADE	B (mT) at	CORE LOSS (W) at		
	H = 250 A/m; f = 25 kHz; T = 100 °C	f = 25 kHz; $\hat{B}$ = 200 mT; T = 100 °C	f = 100 kHz; $\hat{B}$ = 100 mT; T = 100 °C	f = 400 kHz; $\hat{B}$ = 50 mT; T = 100 °C
3C81	≥320	≤ 0.10	–	–
3C90	≥320	≤ 0.044	≤ 0.044	–
3F3	≥320	–	≤ 0.05	≤ 0.09

RING CORES (TOROIDS)

Effective core parameters

SYMBOL	PARAMETER	VALUE	UNIT
Σ(l/A)	core factor (C1)	2.84	mm^{-1}
V_e	effective volume	430	mm^3
l_e	effective length	35	mm
A_e	effective area	12.3	mm^2
m	mass of core	≈ 2.1	g

Coating

The cores are coated with polyamide 11 (PA11), flame retardant in accordance with *"UL 94V-2"*; UL file number E 45228 (M). The colour is white.
Maximum operating temperature is 160 °C.

Isolation voltage

DC isolation voltage: 1500 V.
Contacts are applied on the edge of the ring core, which is also the critical point for the winding operation.

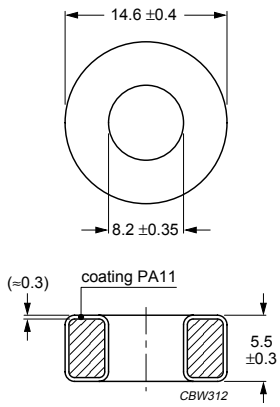

Dimensions in mm.

Fig.1 TN14/9/5 ring core.

Ring core data

GRADE	A_L (nH)	μ_i	TYPE NUMBER
4C65	55 ± 25%	≈ 125	TN14/9/5-4C65
4A11	310 ± 25%	≈ 700[1]	TN14/9/5-4A11
3R1[2]	–	≈ 800	TN14/9/5-3R1
3F3	790 ± 25%	≈ 1800	TN14/9/5-3F3
3C90	1015 ± 25%	≈ 2300	TN14/9/5-3C90
3C11	1900 ± 25%	≈ 4300	TN14/9/5-3C11
3E25	2430 ± 30%	≈ 5500	TN14/9/5-3E25

1. Old permeability specification maintained.
2. Due to the rectangular BH-loop of 3R1, inductance values strongly depend on the magnetic state of the ring core and measuring conditions. Therefore no A_L value is specified. For the application in magnetic amplifiers A_L is not a critical parameter.

WARNING
Do not use 3R1 cores close to their mechanical resonant frequency. For more information refer to *"3R1"* material specification in this data handbook.

Properties of cores under power conditions

GRADE	B (mT) at	CORE LOSS (W) at		
	H = 250 A/m; f = 25 kHz; T = 100 °C	f = 25 kHz; $\hat{B}$ = 200 mT; T = 100 °C	f = 100 kHz; $\hat{B}$ = 100 mT; T = 100 °C	f = 400 kHz; $\hat{B}$ = 50 mT; T = 100 °C
3C90	≥320	≤0.048	≤0.048	
3F3	≥320		≤0.05	≤0.08

RING CORES (TOROIDS)

Effective core parameters

SYMBOL	PARAMETER	VALUE	UNIT
$\Sigma(l/A)$	core factor (C1)	2.84	mm^{-1}
V_e	effective volume	430	mm^3
l_e	effective length	35	mm
A_e	effective area	12.3	mm^2
m	mass of core	≈ 2.1	g

Coating

The cores are coated with epoxy, flame retardant in accordance with *"UL 94V-0"*; UL file number E 228348.
The colour is white.
Maximum operating temperature is 200 °C.

Isolation voltage

DC isolation voltage: 1500 V.
Contacts are applied on the edge of the ring core, which is also the critical point for the winding operation.

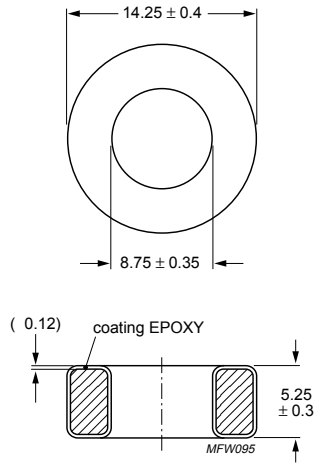

Dimensions in mm.

Fig.1 TX14/9/5 ring core.

Ring core data

GRADE	A_L (nH)	μ_i	TYPE NUMBER
3E5	3760 ± 30%	≈ 8500	TX14/9/5-3E5
3E6 des	4415 ± 30%	≈ 10000	TX14/9/5-3E6

RING CORES (TOROIDS)

Effective core parameters

SYMBOL	PARAMETER	VALUE	UNIT
Σ(l/A)	core factor (C1)	1.58	mm^{-1}
V_e	effective volume	774	mm^3
l_e	effective length	35	mm
A_e	effective area	22.1	mm^2
m	mass of core	≈ 3.8	g

Coating

The cores are coated with polyamide 11 (PA11), flame retardant in accordance with *"UL 94V-2"*; UL file number E 45228 (M).
The colour is white.
Maximum operating temperature is 160 °C.

Isolation voltage

DC isolation voltage: 1500 V.
Contacts are applied on the edge of the ring core, which is also the critical point for the winding operation.

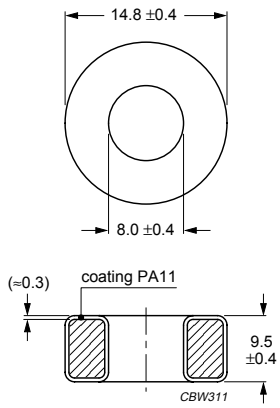

Dimensions in mm.

Fig.1 TN14/9/9 ring core.

Ring core data

GRADE	A_L (nH)	μ_i	TYPE NUMBER
4A11	557 ± 25%	≈ 700[1]	TN14/9/9-4A11
3F3	1430 ± 25%	≈ 1800	TN14/9/9-3F3
3C90	1825 ± 25%	≈ 2300	TN14/9/9-3C90
3C11	3400 ± 25%	≈ 4300	TN14/9/9-3C11
3E25	4370 ± 30%	≈ 5500	TN14/9/9-3E25

1. Old permeability specification maintained.

Properties of cores under power conditions

GRADE	B (mT) at	CORE LOSS (W) at		
	H = 250 A/m; f = 25 kHz; T = 100 °D	f = 25 kHz; $\hat{B}$ = 200 mT; T = 100 °C	f = 100 kHz; $\hat{B}$ = 100 mT; T = 100 °C	f = 400 kHz; $\hat{B}$ = 50 mT; T = 100 °C
3C90	≥320	≤ 0.087	≤ 0.087	–
3F3	≥320	–	≤ 0.09	≤ 0.15

RING CORES (TOROIDS)

Effective core parameters

SYMBOL	PARAMETER	VALUE	UNIT
$\Sigma(l/A)$	core factor (C1)	1.58	mm^{-1}
V_e	effective volume	774	mm^3
l_e	effective length	35	mm
A_e	effective area	22.1	mm^2
m	mass of core	≈ 3.8	g

Coating

The cores are coated with epoxy, flame retardant in accordance with *"UL 94V-0"*; UL file number E 228348.
The colour is white.
Maximum operating temperature is 200 °C.

Isolation voltage

DC isolation voltage: 1500 V.
Contacts are applied on the edge of the ring core, which is also the critical point for the winding operation.

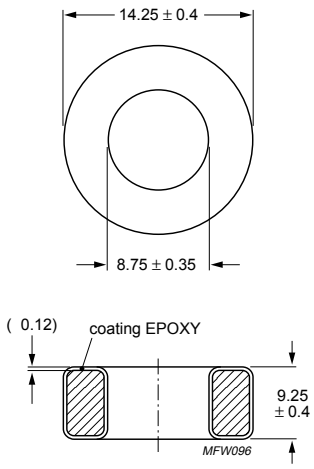

Dimensions in mm.

Fig.1 TX14/9/9 ring core.

Ring core data

GRADE	A_L (nH)	μ_i	TYPE NUMBER
3E5	6760 ± 30%	≈ 8500	TX14/9/9-3E5
3E6 des	7955 ± 30%	≈ 10000	TX14/9/9-3E6

RING CORES (TOROIDS)

Effective core parameters

SYMBOL	PARAMETER	VALUE	UNIT
$\Sigma(l/A)$	core factor (C1)	2.53	mm^{-1}
V_e	effective volume	548	mm^3
l_e	effective length	37.2	mm
A_e	effective area	14.7	mm^2
m	mass of core	≈ 2.7	g

Coating

The cores are coated with epoxy, flame retardant in accordance with *"UL 94V-0"*; UL file number E 228348.
The colour is white.
Maximum operating temperature is 200 °C.

Isolation voltage

DC isolation voltage: 1500 V.
Contacts are applied on the edge of the ring core, which is also the critical point for the winding operation.

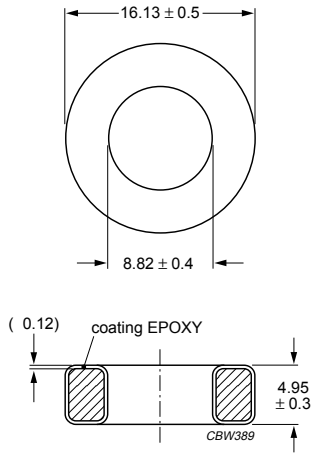

Dimensions in mm.

Fig.1 TX16/9.1/4.7 ring core.

Ring core data

GRADE	A_L (nH)	μ_i	TYPE NUMBER
3C90	1215 ± 20%	≈ 2300	TX16/9.1/4.7-3C90
3C81	1400 ± 20%	≈ 2700	TX16/9.1/4.7-3C81
3E27	2600 ± 20%	≈ 5000	TX16/9.1/4.7-3E27
3E6 des	5200 ± 30%	≈ 10500	TX16/9.1/4.7-3E6

Properties of cores under power conditions

GRADE	B (mT) at	CORE LOSS (W) at	
	H = 250 A/m; f = 25 kHz; T = 100 °C	f = 25 kHz; $\hat{B}$ = 200 mT; T = 100 °C	f = 100 kHz; $\hat{B}$ = 100 mT; T = 100 °C
3C81	≥320	≤ 0.11	–
3C90	≥320	≤ 0.055	≤ 0.055

RING CORES (TOROIDS)

Effective core parameters

SYMBOL	PARAMETER	VALUE	UNIT
Σ(l/A)	core factor (C1)	1.95	mm^{-1}
V_e	effective volume	760	mm^3
l_e	effective length	38.5	mm
A_e	effective area	19.7	mm^2
m	mass of core	≈ 3.8	g

Coating

The cores are coated with polyamide 11 (PA11), flame retardant in accordance with *"UL 94V-2"*; UL file number E 45228 (M).
The colour is white.
Maximum operating temperature is 160 °C.

Isolation voltage

DC isolation voltage: 1500 V.
Contacts are applied on the edge of the ring core, which is also the critical point for the winding operation.

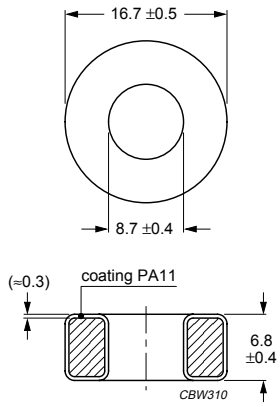

Dimensions in mm.

Fig.1 TN16/9.6/6.3 ring core.

Ring core data

GRADE	A_L (nH)	μ_i	TYPE NUMBER
4A11	450 ± 25%	≈ 700[1]	TN16/9.6/6.3-4A11
3F3	1160 ± 25%	≈ 1800	TN16/9.6/6.3-3F3
3C90	1480 ± 25%	≈ 2300	TN16/9.6/6.3-3C90
3C11	2700 ± 25%	≈ 4300	TN16/9.6/6.3-3C11
3E25	3540 ± 30%	≈ 5500	TN16/9.6/6.3-3E25

1. Old permeability specification maintained.

Properties of cores under power conditions

GRADE	B (mT) at	CORE LOSS (W) at		
	H = 250 A/m; f = 25 kHz; T = 100 °C	f = 25 kHz; $\hat{B}$ = 200 mT; T = 100 °C	f = 100 kHz; $\hat{B}$ = 100 mT; T = 100 °C	f = 400 kHz; $\hat{B}$ = 50 mT; T = 100 °C
3C90	≥320	≤ 0.085	≤ 0.085	–
3F3	≥320	–	≤ 0.09	≤ 0.15

RING CORES (TOROIDS)

Effective core parameters

SYMBOL	PARAMETER	VALUE	UNIT
$\Sigma(l/A)$	core factor (C1)	1.95	mm^{-1}
V_e	effective volume	760	mm^3
l_e	effective length	38.5	mm
A_e	effective area	19.7	mm^2
m	mass of core	≈ 3.8	g

Coating

The cores are coated with epoxy, flame retardant in accordance with *"UL 94V-0"*; UL file number E 228348.
The colour is white.
Maximum operating temperature is 200 °C.

Isolation voltage

DC isolation voltage: 1500 V.
Contacts are applied on the edge of the ring core, which is also the critical point for the winding operation.

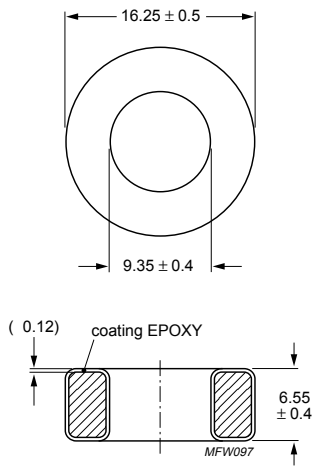

Dimensions in mm.

Fig.1 TX16/9.6/6.3 ring core.

Ring core data

GRADE	A_L (nH)	μ_i	TYPE NUMBER
3E5	5470 ± 30%	≈ 8500	TX16/9.6/6.3-3E5
3E6 des	6430 ± 30%	≈ 10000	TX16/9.6/6.3-3E6

RING CORES (TOROIDS)

Effective core parameters

SYMBOL	PARAMETER	VALUE	UNIT
$\Sigma(l/A)$	core factor (C1)	1.08	mm^{-1}
V_e	effective volume	1795	mm^3
l_e	effective length	44.0	mm
A_e	effective area	40.8	mm^2
m	mass of core	≈ 9.2	g

Coating

The cores are coated with polyamide 11 (PA11), flame retardant in accordance with *"UL 94V-2"*; UL file number E 45228 (M).
The colour is white.
Maximum operating temperature is 160 °C.

Isolation voltage

DC isolation voltage: 1500 V.
Contacts are applied on the edge of the ring core, which is also the critical point for the winding operation.

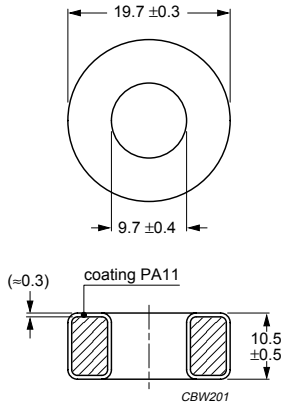

Dimensions in mm.

Fig.1 TN19/11/10 ring core.

Ring core data

GRADE	A_L (nH)	μ_i	TYPE NUMBER
3C90 des	2680 ± 25%	≈ 2300	TN19/11/10-3C90
3C11	5000 ± 25%	≈ 4300	TN19/11/10-3C11
3E25	6420 ± 25%	≈ 5500	TN19/11/10-3E25

Properties of cores under power conditions

GRADE	B (mT) at	CORE LOSS (W) at	
	H = 250 A/m; f = 25 kHz; T = 100 °C	f = 25 kHz; $\hat{B}$ = 200 mT; T = 100 °C	f = 100 kHz; $\hat{B}$ = 100 mT; T = 100 °C
3C90	≥320	≤ 0.20	≤ 0.20

RING CORES (TOROIDS)

Effective core parameters

SYMBOL	PARAMETER	VALUE	UNIT
$\Sigma(l/A)$	core factor (C1)	0.718	mm^{-1}
V_e	effective volume	2692	mm^3
l_e	effective length	44.0	mm
A_e	effective area	61.2	mm^2
m	mass of core	≈ 13.8	g

Coating

The cores are coated with polyamide 11 (PA11), flame retardant in accordance with *"UL 94V-2"*; UL file number E 45228 (M).
The colour is white.
Maximum operating temperature is 160 °C.

Isolation voltage

DC isolation voltage: 1500 V.
Contacts are applied on the edge of the ring core, which is also the critical point for the winding operation.

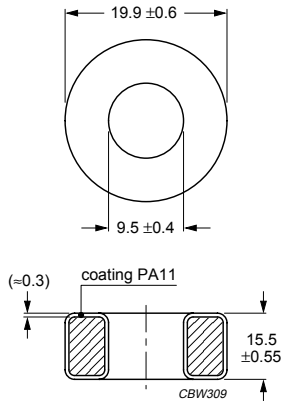

Dimensions in mm.

Fig.1 TN19/11/15 ring core.

Ring core data

GRADE	A_L (nH)	μ_i	TYPE NUMBER
3C90 des	4020 ± 25%	≈ 2300	TN19/11/15-3C90
3C11	7500 ± 25%	≈ 4300	TN19/11/15-3C11
3E25	9630 ± 25%	≈ 5500	TN19/11/15-3E25

Properties of cores under power conditions

GRADE	B (mT) at	CORE LOSS (W) at	
	H = 250 A/m; f = 25 kHz; T = 100 °C	f = 25 kHz; $\hat{B}$ = 200 mT; T = 100 °C	f = 100 kHz; $\hat{B}$ = 100 mT; T = 100 °C
3C90	≥320	≤ 0.30	≤ 0.30

RING CORES (TOROIDS)

Effective core parameters

SYMBOL	PARAMETER	VALUE	UNIT
Σ(l/A)	core factor (C1)	1.30	mm^{-1}
V_e	effective volume	1465	mm^3
l_e	effective length	43.6	mm
A_e	effective area	33.6	mm^2
m	mass of core	≈ 7.7	g

Coating

The cores are coated with polyamide 11 (PA11), flame retardant in accordance with *"UL 94V-2"*; UL file number E 45228 (M).
The colour is white.
Maximum operating temperature is 160 °C.

Isolation voltage

DC isolation voltage: 2000 V.
Contacts are applied on the edge of the ring core, which is also the critical point for the winding operation.

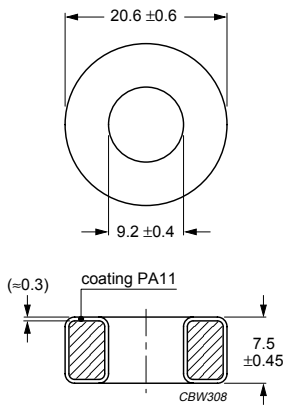

Dimensions in mm.

Fig.1 TN20/10/7 ring core.

Ring core data

GRADE	A_L (nH)	μ_i	TYPE NUMBER
4C65	121 ± 25%	≈ 125	TN20/10/7-4C65
3C90	2230 ± 25%	≈ 2300	TN20/10/7-3C90
3C11	4150 ± 25%	≈ 4300	TN20/10/7-3C11
3E25	5340 ± 25%	≈ 5500	TN20/10/7-3E25

Properties of cores under power conditions

GRADE	B (mT) at	CORE LOSS (W) at	
	H = 250 A/m; f = 25 kHz; T = 100 °C	f = 25 kHz; $\hat{B}$ = 200 mT; T = 100 °C	f = 100 kHz; $\hat{B}$ = 100 mT; T = 100 °C
3C90	≥320	≤ 0.15	≤ 0.16

RING CORES (TOROIDS)

Effective core parameters

SYMBOL	PARAMETER	VALUE	UNIT
Σ(l/A)	core factor (C1)	1.30	mm^{-1}
V_e	effective volume	1465	mm^3
l_e	effective length	43.6	mm
A_e	effective area	33.6	mm^2
m	mass of core	≈ 7.7	g

Coating

The cores are coated with epoxy, flame retardant in accordance with *"UL 94V-0"*; UL file number E 228348.
The colour is white.
Maximum operating temperature is 200 °C.

Isolation voltage

DC isolation voltage: 2000 V.
Contacts are applied on the edge of the ring core, which is also the critical point for the winding operation.

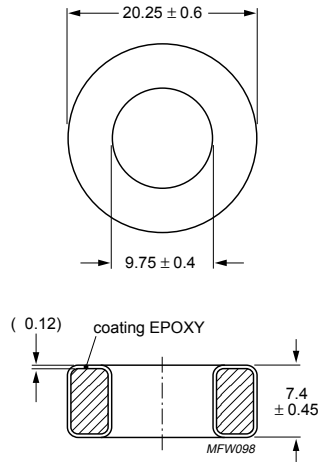

Dimensions in mm.

Fig.1 TX20/10/7 ring core.

Ring core data

GRADE	A_L (nH)	μ_i	TYPE NUMBER
3E5	8250 ± 30%	≈ 8500	TX20/10/7-3E5
3E6 des	9685 ± 30%	≈ 10000	TX20/10/7-3E6

RING CORES (TOROIDS)

Effective core parameters

SYMBOL	PARAMETER	VALUE	UNIT
Σ(l/A)	core factor (C1)	2.20	mm^{-1}
V_e	effective volume	1340	mm^3
l_e	effective length	54.2	mm
A_e	effective area	24.8	mm^2
m	mass of core	≈ 6.5	g

Coating

The cores are coated with epoxy, flame retardant in accordance with *"UL 94V-0"*; UL file number E 228348.
The colour is white.
Maximum operating temperature is 200 °C.

Isolation voltage

DC isolation voltage: 2000 V.
Contacts are applied on the edge of the ring core, which is also the critical point for the winding operation.

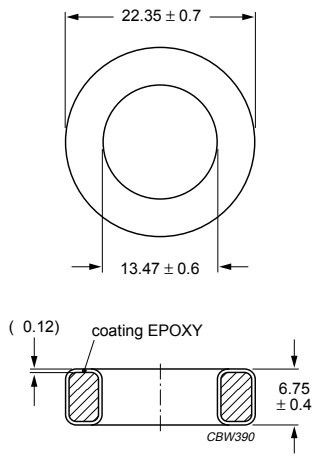

Dimensions in mm.

Fig.1 TX22/14/6.4 ring core.

Ring core data

GRADE	A_L (nH)	μ_i	TYPE NUMBER
4C65	75 ± 25%	≈ 125	TX22/14/6.4-4C65
3D3	454 ± 20%	≈ 750	TX22/14/6.4-3D3
3C90	1400 ± 20%	≈ 2300	TX22/14/6.4-3C90
3C81	1650 ± 20%	≈ 2700	TX22/14/6.4-3C81
3E27 des	3055 ± 20%	≈ 5300	TX22/14/6.4-3E27
3E6	6000 ± 30%	≈ 10500	TX22/14/6.4-3E6

Properties of cores under power conditions

GRADE	B (mT) at	CORE LOSS (W) at	
	H = 250 A/m; f = 25 kHz; T = 100 °C	f = 25 kHz; $\hat{B}$ = 200 mT; T = 100 °C	f = 100 kHz; $\hat{B}$ = 100 mT; T = 100 °C
3C81	≥320	≤ 0.21	–
3C90	≥320	≤ 0.13	≤ 0.13

RING CORES (TOROIDS)

Effective core parameters

SYMBOL	PARAMETER	VALUE	UNIT
Σ(l/A)	core factor (C1)	1.07	mm^{-1}
V_e	effective volume	2750	mm^3
l_e	effective length	54.2	mm
A_e	effective area	50.9	mm^2
m	mass of core	≈ 14	g

Coating

The cores are coated with epoxy, flame retardant in accordance with *"UL 94V-0"*; UL file number E 228348.
The colour is white.
Maximum operating temperature is 200 °C.

Isolation voltage

DC isolation voltage: 2000 V.
Contacts are applied on the edge of the ring core, which is also the critical point for the winding operation.

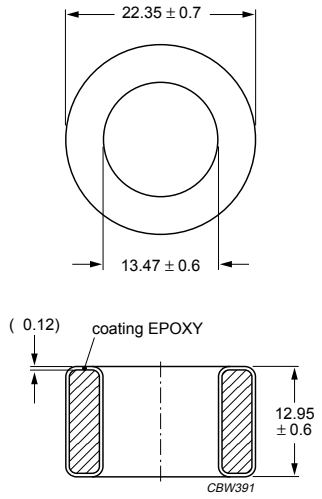

Dimensions in mm.

Fig.1 TX22/14/13 ring core.

Ring core data

GRADE	A_L (nH)	μ_i	TYPE NUMBER
3F3	2200 ± 20%	≈ 1800	TX22/14/13-3F3
3C90	2795 ± 20%	≈ 2300	TX22/14/13-3C90
3E27 des	6110 ± 20%	≈ 5000	TX22/14/13-3E27
3E6	12080 ± 30%	≈ 10300	TX22/14/13-3E6

Properties of cores under power conditions

GRADE	B (mT) at	CORE LOSS (W) at	
	H = 250 A/m; f = 25 kHz; T = 100 °C	f = 100 kHz; $\hat{B}$ = 100 mT; T = 100 °C	f = 400 kHz; $\hat{B}$ = 50 mT; T = 100 °C
3F3	≥320	≤ 0.30	≤ 0.52

Ferrite toroids TN23/14/7

RING CORES (TOROIDS)

Effective core parameters

SYMBOL	PARAMETER	VALUE	UNIT
Σ(l/A)	core factor (C1)	1.81	mm^{-1}
V_e	effective volume	1722	mm^3
l_e	effective length	55.8	mm
A_e	effective area	30.9	mm^2
m	mass of core	≈ 8.4	g

Coating

The cores are coated with polyamide 11 (PA11), flame retardant in accordance with *"UL 94V-2"*; UL file number E 45228 (M).
The colour is white.
Maximum operating temperature is 160 °C.

Isolation voltage

DC isolation voltage: 2000 V.
Contacts are applied on the edge of the ring core, which is also the critical point for the winding operation.

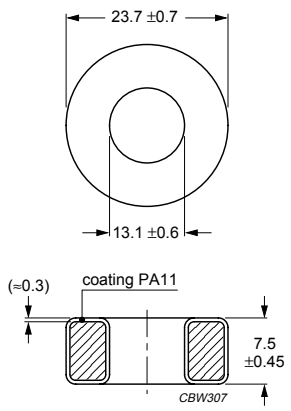

Dimensions in mm.

Fig.1 TN23/14/7 ring core.

Ring core data

GRADE	A_L (nH)	μ_i	TYPE NUMBER
4C65	87 ± 25%	≈ 125	TN23/14/7-4C65
4A11	486 ± 25%	≈ 700[1]	TN23/14/7-4A11
3R1[2]	–	≈ 800	TN23/14/7-3R1
3F3	1250 ± 25%	≈ 1800	TN23/14/7-3F3
3C90	1600 ± 25%	≈ 2300	TN23/14/7-3C90
3C11 des	3000 ± 25%	≈ 4300	TN23/14/7-3C11
3E25	3820 ± 25%	≈ 5500	TN23/14/7-3E25

1. Old permeability specification maintained.
2. Due to the rectangular BH-loop of 3R1, inductance values strongly depend on the magnetic state of the ring core and measuring conditions. Therefore no A_L value is specified. For the application in magnetic amplifiers A_L is not a critical parameter.

WARNING
Do not use 3R1 cores close to their mechanical resonant frequency. For more information refer to *"3R1"* material specification in this data handbook.

Properties of cores under power conditions

GRADE	B (mT) at	CORE LOSS (W) at		
	H = 250 A/m; f = 25 kHz; T = 100 °C	**f = 25 kHz; $\hat{B}$ = 200 mT; T = 100 °C**	**f = 100 kHz; $\hat{B}$ = 100 mT; T = 100 °C**	**f = 400 kHz; $\hat{B}$ = 50 mT; T = 100 °C**
3C90	≥320	≤ 0.19	≤ 0.19	
3F3	≥320		≤ 0.19	≤ 0.33

RING CORES (TOROIDS)

Effective core parameters

SYMBOL	PARAMETER	VALUE	UNIT
$\Sigma(l/A)$	core factor (C1)	1.23	mm^{-1}
V_e	effective volume	2944	mm^3
l_e	effective length	60.2	mm
A_e	effective area	48.9	mm^2
m	mass of core	≈ 15	g

Coating

The cores are coated with polyamide 11 (PA11), flame retardant in accordance with *"UL 94V-2"*; UL file number E 45228 (M).
The colour is white.
Maximum operating temperature is 160 °C.

Isolation voltage

DC isolation voltage: 2000 V.
Contacts are applied on the edge of the ring core, which is also the critical point for the winding operation.

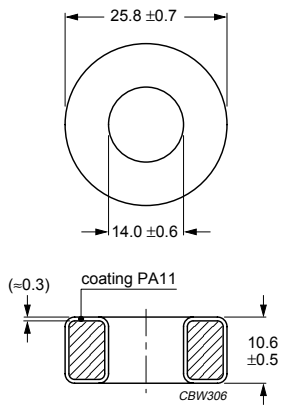

Dimensions in mm.

Fig.1 TN25/15/10 ring core.

Ring core data

GRADE	A_L (nH)	μ_i	TYPE NUMBER
3F3	1840 ± 25%	≈ 1800	TN25/15/10-3F3
3C90	2350 ± 25%	≈ 2300	TN25/15/10-3C90
3C11	4400 ± 25%	≈ 4300	TN25/15/10-3C11
3E25	5620 ± 25%	≈ 5500	TN25/15/10-3E25

Properties of cores under power conditions

GRADE	B (mT) at	CORE LOSS (W) at		
	H = 250 A/m; f = 25 kHz; T = 100 °C	f = 25 kHz; $\hat{B}$ = 200 mT; T = 100 °C	f = 100 kHz; $\hat{B}$ = 100 mT; T = 100 °C	f = 400 kHz; $\hat{B}$ = 50 mT; T = 100 °C
3C90	≥320	≤ 0.33	≤ 0.33	–
3F3	≥320	–	≤ 0.32	≤ 0.56

RING CORES (TOROIDS)

Effective core parameters

SYMBOL	PARAMETER	VALUE	UNIT
Σ(l/A)	core factor (C1)	1.23	mm^{-1}
V_e	effective volume	2944	mm^3
l_e	effective length	60.2	mm
A_e	effective area	48.9	mm^2
m	mass of core	≈ 15	g

Coating

The cores are coated with epoxy, flame retardant in accordance with *"UL 94V-0"*; UL file number E 228348.
The colour is white.
Maximum operating temperature is 200 °C.

Isolation voltage

DC isolation voltage: 2000 V.
Contacts are applied on the edge of the ring core, which is also the critical point for the winding operation.

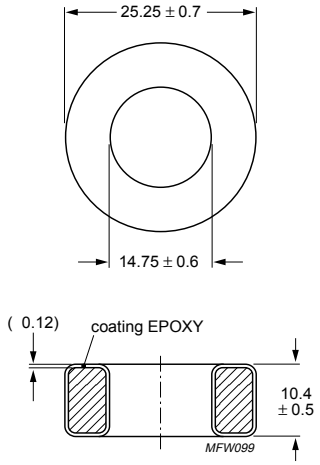

Dimensions in mm.

Fig.1 TX25/15/10 ring core.

Ring core data

GRADE	A_L (nH)	μ_i	TYPE NUMBER
3E5	8680 ± 30%	≈ 8500	TX25/15/10-3E5
3E6 des	10200 ± 30%	≈ 10000	TX25/15/10-3E6

RING CORES (TOROIDS)

Effective core parameters

SYMBOL	PARAMETER	VALUE	UNIT
$\Sigma(l/A)$	core factor (C1)	1.08	mm^{-1}
V_e	effective volume	3360	mm^3
l_e	effective length	60.1	mm
A_e	effective area	55.9	mm^2
m	mass of core	≈ 17	g

Coating

The cores are coated with polyamide 11 (PA11), flame retardant in accordance with *"UL 94V-2"*; UL file number E 45228 (M).
The colour is white.
Maximum operating temperature is 160 °C.

Isolation voltage

DC isolation voltage: 2000 V.
Contacts are applied on the edge of the ring core, which is also the critical point for the winding operation.

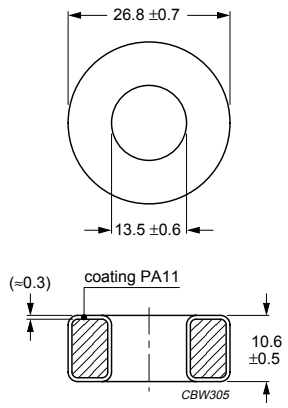

Dimensions in mm.

Fig.1 TN26/15/10 ring core.

Ring core data

GRADE	A_L (nH)	μ_i	TYPE NUMBER
4A11	817 ± 25%	≈ 700[1]	TN26/15/10-4A11
3C90	2645 ± 25%	≈ 2300	TN26/15/10-3C90
3C11	5000 ± 25%	≈ 4300	TN26/15/10-3C11
3E25	6420 ± 25%	≈ 5500	TN26/15/10-3E25

1. Old permeability specification maintained.

Properties of cores under power conditions

GRADE	B (mT) at	CORE LOSS (W) at	
	H = 250 A/m; f = 25 kHz; T = 100 °C	f = 25 kHz; $\hat{B}$ = 200 mT; T = 100 °C	f = 100 kHz; $\hat{B}$ = 100 mT; T = 100 °C
3C90	≥320	≤ 0.38	≤ 0.38

RING CORES (TOROIDS)

Effective core parameters

SYMBOL	PARAMETER	VALUE	UNIT
$\Sigma(l/A)$	core factor (C1)	1.08	mm^{-1}
V_e	effective volume	3360	mm^3
l_e	effective length	60.1	mm
A_e	effective area	55.9	mm^2
m	mass of core	≈ 17	g

Coating

The cores are coated with epoxy, flame retardant in accordance with *"UL 94V-0"*; UL file number E 228348.
The colour is white.
Maximum operating temperature is 200 °C.

Isolation voltage

DC isolation voltage: 2000 V.
Contacts are applied on the edge of the ring core, which is also the critical point for the winding operation.

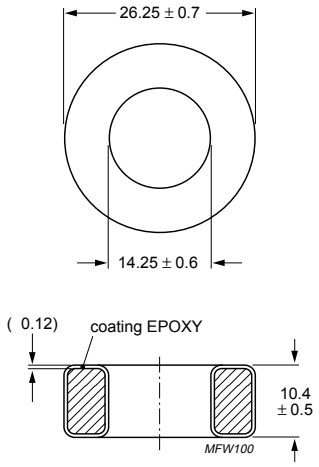

Dimensions in mm.

Fig.1 TX26/15/10 ring core.

Ring core data

GRADE	A_L (nH)	μ_i	TYPE NUMBER
3E5	10000 ± 30%	≈ 8500	TX26/15/10-3E5

RING CORES (TOROIDS)

Effective core parameters

SYMBOL	PARAMETER	VALUE	UNIT
Σ(l/A)	core factor (C1)	0.538	mm^{-1}
V_e	effective volume	6720	mm^3
l_e	effective length	60.1	mm
A_e	effective area	112	mm^2
m	mass of set	≈ 34	g

Coating

The cores are coated with polyamide 11 (PA11), flame retardant in accordance with *"UL 94V-2"*; UL file number E 45228 (M).
The colour is white.
Maximum operating temperature is 160 °C.

Isolation voltage

DC isolation voltage: 2000 V.
Contacts are applied on the edge of the ring core, which is also the critical point for the winding operation.

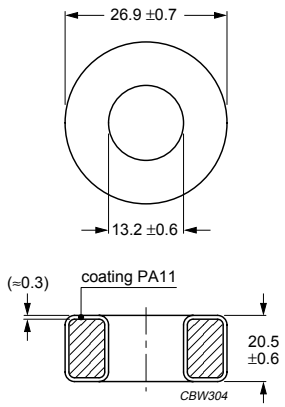

Dimensions in mm.

Fig.1 TN26/15/20 ring core.

Ring core data

GRADE	A_L (nH)	μ_i	TYPE NUMBER
3C90 des	5400 ± 25%	≈ 2300	TN26/15/20-3C90
3C11	10000 ± 25%	≈ 4300	TN26/15/20-3C11
3E25	12800 ± 25%	≈ 5500	TN26/15/20-3E25

Properties of cores under power conditions

GRADE	B (mT) at	CORE LOSS (W) at	
	H = 250 A/m; f = 25 kHz; T = 100 °C	f = 25 kHz; $\hat{B}$ = 200 mT; T = 100 °C	f = 100 kHz; $\hat{B}$ = 100 mT; T = 100 °C
3C90	≥320	≤ 0.75	≤ 0.75

RING CORES (TOROIDS)

Effective core parameters

SYMBOL	PARAMETER	VALUE	UNIT
$\Sigma(l/A)$	core factor (C1)	1.04	mm^{-1}
V_e	effective volume	2680	mm^3
l_e	effective length	52.9	mm
A_e	effective area	50.8	mm^2
m	mass of core	≈ 14	g

Coating

The cores are coated with polyamide 11 (PA11), flame retardant in accordance with *"UL 94V-2"*; UL file number E 45228 (M).
The colour is white.
Maximum operating temperature is 160 °C.

Isolation voltage

DC isolation voltage: 2000 V.
Contacts are applied on the edge of the ring core, which is also the critical point for the winding operation.

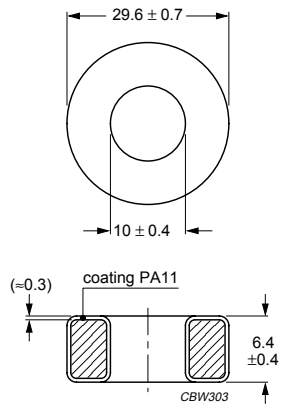

Dimensions in mm.

Fig.1 TN29/11/6 ring core.

Ring core data

GRADE	A_L (nH)	μ_i	TYPE NUMBER
3C90	2780 ± 20%	≈ 2300	TN29/11/6-3C90
3C11	5100 ± 25%	≈ 4300	TN29/11/6-3C11

Properties of cores under power conditions

GRADE	B (mT) at	CORE LOSS (W) at	
	H = 250 A/m; f = 25 kHz; T = 100 °C	f = 25 kHz; $\hat{B}$ = 200 mT; T = 100 °C	f = 100 kHz; $\hat{B}$ = 100 mT; T = 100 °C
3C90	≥320	≤ 0.3	≤ 0.3

RING CORES (TOROIDS)

Effective core parameters

SYMBOL	PARAMETER	VALUE	UNIT
$\Sigma(l/A)$	core factor (C1)	1.98	mm^{-1}
V_e	effective volume	2700	mm^3
l_e	effective length	73.2	mm
A_e	effective area	36.9	mm^2
m	mass of core	≈ 13.5	g

Coating

The cores are coated with polyamide 11 (PA11), flame retardant in accordance with *"UL 94V-2"*; UL file number E 45228 (M).
The colour is white.
Maximum operating temperature is 160 °C.

Isolation voltage

DC isolation voltage: 2000 V.
Contacts are applied on the edge of the ring core, which is also the critical point for the winding operation.

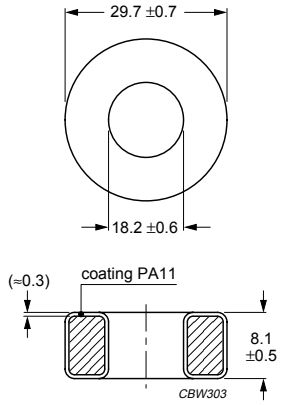

Dimensions in mm.

Fig.1 TN29/19/7.5 ring core.

Ring core data

GRADE	A_L (nH)	μ_i	TYPE NUMBER
3C90	1460 ± 25%	≈ 2300	TN29/19/7.5-3C90
3C11	2700 ± 25%	≈ 4300	TN29/19/7.5-3C11
3E25	3550 ± 25%	≈ 5500	TN29/19/7.5-3E25

Properties of cores under power conditions

GRADE	B (mT) at	CORE LOSS (W) at	
	H = 250 A/m; f = 25 kHz; T = 100 °C	f = 25 kHz; $\hat{B}$ = 200 mT; T = 100 °C	f = 100 kHz; $\hat{B}$ = 100 mT; T = 100 °C
3C90	≥320	≤0.30	≤0.30

RING CORES (TOROIDS)

Effective core parameters

SYMBOL	PARAMETER	VALUE	UNIT
$\Sigma(l/A)$	core factor (C1)	1.98	mm^{-1}
V_e	effective volume	2700	mm^3
l_e	effective length	73.2	mm
A_e	effective area	36.9	mm^2
m	mass of core	≈ 13.5	g

Coating

The cores are coated with epoxy, flame retardant in accordance with *"UL 94V-0"*; UL file number E 228348.
The colour is white.
Maximum operating temperature is 200 °C.

Isolation voltage

DC isolation voltage: 2000 V.
Contacts are applied on the edge of the ring core, which is also the critical point for the winding operation.

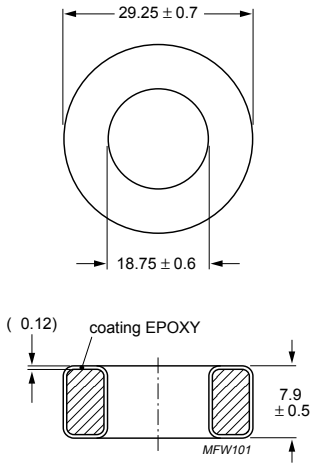

Dimensions in mm.

Fig.1 TX29/19/7.5 ring core.

Ring core data

GRADE	A_L (nH)	μ_i	TYPE NUMBER
3E6 des	6340 ± 30%	≈ 10000	TX29/19/7.5-3E6

RING CORES (TOROIDS)

Effective core parameters

SYMBOL	PARAMETER	VALUE	UNIT
$\Sigma(l/A)$	core factor (C1)	2.06	mm^{-1}
V_e	effective volume	2600	mm^3
l_e	effective length	73.2	mm
A_e	effective area	35.5	mm^2
m	mass of core	≈ 13	g

Coating

The cores are coated with epoxy, flame retardant in accordance with *"UL 94V-0"*; UL file number E 228348.
The colour is white.
Maximum operating temperature is 200 °C.

Isolation voltage

DC isolation voltage: 2000 V.
Contacts are applied on the edge of the ring core, which is also the critical point for the winding operation.

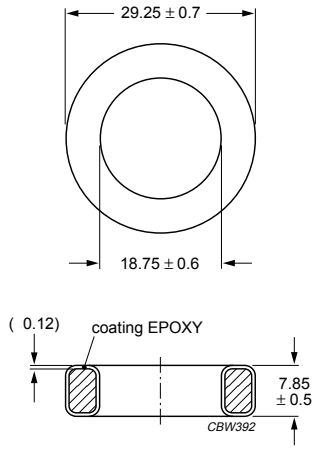

Dimensions in mm.

Fig.1 TX29/19/7.6 ring core.

Ring core data

GRADE	A_L (nH)	μ_i	TYPE NUMBER
3C81	1740 ± 20%	≈ 2800	TX29/19/7.6-3C81
3E27	3225 ± 20%	≈ 5300	TX29/19/7.6-3E27

Properties of cores under power conditions

GRADE	B (mT) at	CORE LOSS (W) at
	H = 250 A/m; f = 25 kHz; T = 100 °C	f = 25 kHz; $\hat{B}$ = 200 mT; T = 100 °C
3C81	≥320	≤ 0.53

RING CORES (TOROIDS)

Effective core parameters

SYMBOL	PARAMETER	VALUE	UNIT
Σ(l/A)	core factor (C1)	0.98	mm^{-1}
V_e	effective volume	5410	mm^3
l_e	effective length	73.2	mm
A_e	effective area	73.9	mm^2
m	mass of core	≈ 28	g

Coating

The cores are coated with polyamide 11 (PA11), flame retardant in accordance with *"UL 94V-2"*; UL file number E 45228 (M).
The colour is white.
Maximum operating temperature is 160 °C.

Isolation voltage

DC isolation voltage: 2000 V.
Contacts are applied on the edge of the ring core, which is also the critical point for the winding operation.

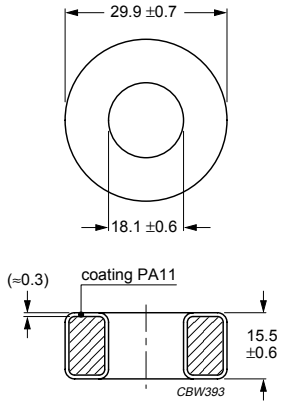

Dimensions in mm.

Fig.1 TN29/19/15 ring core.

Ring core data

GRADE	A_L (nH)	μ_i	TYPE NUMBER
3C90	2960 ± 20%	≈ 2300	TN29/19/15-3C90
3E25	7000 ± 25%	≈ 5500	TN29/19/15-3E25

Properties of cores under power conditions

GRADE	B (mT) at	CORE LOSS (W) at	
	H = 250 A/m; f = 25 kHz; T = 100 °C	f = 25 kHz; $\hat{B}$ = 200 mT; T = 100 °C	f = 100 kHz; $\hat{B}$ = 100 mT; T = 100 °C
3C90	≥320	≤ 0.61	≤ 0.61

RING CORES (TOROIDS)

Effective core parameters

SYMBOL	PARAMETER	VALUE	UNIT
Σ(l/A)	core factor (C1)	0.98	mm^{-1}
V_e	effective volume	5410	mm^3
l_e	effective length	73.2	mm
A_e	effective area	73.9	mm^2
m	mass of core	≈ 28	g

Coating

The cores are coated with epoxy, flame retardant in accordance with *"UL 94V-0"*; UL file number E 228348.
The colour is white.
Maximum operating temperature is 200 °C.

Isolation voltage

DC isolation voltage: 2000 V.
Contacts are applied on the edge of the ring core, which is also the critical point for the winding operation.

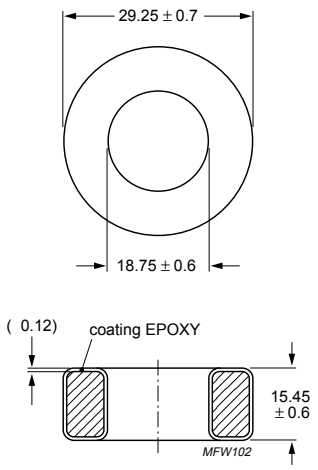

Dimensions in mm.

Fig.1 TX29/19/15 ring core.

Ring core data

GRADE	A_L (nH)	μ_i	TYPE NUMBER
3E5	10780 ± 30%	≈ 8500	TX29/19/15-3E5
3E6 des	12850 ± 30%	≈ 10000	TX29/19/15-3E6

RING CORES (TOROIDS)

Effective core parameters

SYMBOL	PARAMETER	VALUE	UNIT
Σ(l/A)	core factor (C1)	0.99	mm^{-1}
V_e	effective volume	5820	mm^3
l_e	effective length	76	mm
A_e	effective area	76.5	mm^2
m	mass of core	≈29	g

Coating

The cores are coated with polyamide 11 (PA11), flame retardant in accordance with *"UL 94V-2"*; UL file number E 45228 (M).
The colour is white.
Maximum operating temperature is 160 °C.

Isolation voltage

DC isolation voltage: 2000 V.
Contacts are applied on the edge of the ring core, which is also the critical point for the winding operation.

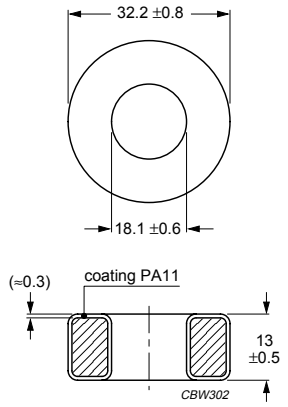

Dimensions in mm.

Fig.1 TN32/19/13 ring core.

Ring core data

GRADE	A_L (nH)	μ_i	TYPE NUMBER
4A11	885 ± 25%	≈ 700[1]	TN32/19/13-4A11
3F3	2270 ± 25%	≈ 1800	TN32/19/13-3F3
3C90	2910 ± 25%	≈ 2300	TN32/19/13-3C90
3C11	5450 ± 25%	≈ 4300	TN32/19/13-3C11
3E25	6950 ± 25%	≈ 5500	TN32/19/13-3E25

1. Old permeability specification maintained.

Properties of cores under power conditions

GRADE	B (mT) at	CORE LOSS (W) at		
	H = 250 A/m; f = 25 kHz; T = 100 °C	f = 25 kHz; $\hat{B}$ = 200 mT; T = 100 °C	f = 100 kHz; $\hat{B}$ = 100 mT; T = 100 °C	f = 400 kHz; $\hat{B}$ = 50 mT; T = 100 °C
3C90	≥320	≤ 0.65	≤ 0.65	–
3F3	≥320	–	≤ 0.64	≤ 1.1

RING CORES (TOROIDS)

Effective core parameters

SYMBOL	PARAMETER	VALUE	UNIT
$\Sigma(l/A)$	core factor (C1)	0.99	mm^{-1}
V_e	effective volume	5820	mm^3
l_e	effective length	76	mm
A_e	effective area	76.5	mm^2
m	mass of core	≈29	g

Coating

The cores are coated with epoxy, flame retardant in accordance with *"UL 94V-0"*; UL file number E 228348.
The colour is white.
Maximum operating temperature is 200 °C.

Isolation voltage

DC isolation voltage: 2000 V.
Contacts are applied on the edge of the ring core, which is also the critical point for the winding operation.

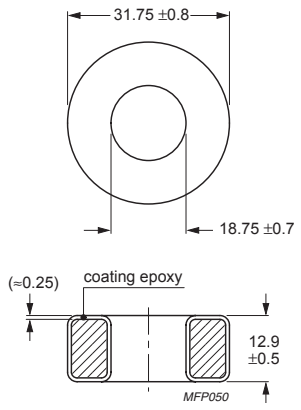

Dimensions in mm.

Fig.1 TX32/19/13 ring core.

Ring core data

GRADE	A_L (nH)	μ_i	TYPE NUMBER
3E5	10700 ± 30%	≈ 8500	TX32/19/13-3E5

RING CORES (TOROIDS)

Effective core parameters

SYMBOL	PARAMETER	VALUE	UNIT
$\Sigma(l/A)$	core factor (C1)	1.38	mm^{-1}
V_e	effective volume	5820	mm^3
l_e	effective length	89.7	mm
A_e	effective area	64.9	mm^2
m	mass of core	≈ 27	g

Coating

The cores are coated with epoxy, flame retardant in accordance with *"UL 94V-0"*; UL file number E 228348.
The colour is white.
Maximum operating temperature is 200 °C.

Isolation voltage

DC isolation voltage: 2000 V.
Contacts are applied on the edge of the ring core, which is also the critical point for the winding operation.

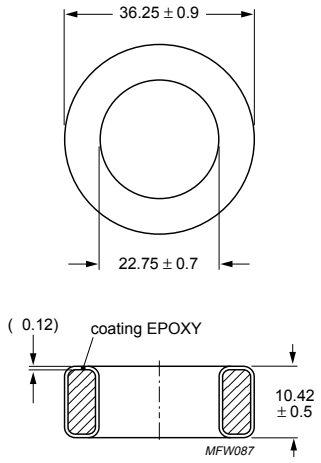

Dimensions in mm.

Fig.1 TX36/23/10 ring core.

Ring core data

GRADE	A_L (nH)	μ_i	TYPE NUMBER
4C65	112 ± 25%	≈ 125	TX36/23/10-4C65
3C90 des	2060 ± 25%	≈ 2300	TX36/23/10-3C90
3C81	2455 ± 20%	≈ 2700	TX36/23/10-3C81
3C11	3900 ± 25%	≈ 4300	TX36/23/10-3C11
3E27	4545 ± 20%	≈ 5000	TX36/23/10-3E27
3E6 des	9090 ± 30%	≈ 10000	TX36/23/10-3E6

Properties of cores under power conditions

GRADE	B (mT) at	CORE LOSS (W) at	
	H = 250 A/m; f = 25 kHz; T = 100 °C	f = 25 kHz; $\hat{B}$ = 200 mT; T = 100 °C	f = 100 kHz; $\hat{B}$ = 100 mT; T = 100 °C
3C90	≥320	≤ 0.64	≤ 0.64
3C81	≥320	≤ 1.1	–

RING CORES (TOROIDS)

Effective core parameters

SYMBOL	PARAMETER	VALUE	UNIT
$\Sigma(l/A)$	core factor (C1)	0.919	mm^{-1}
V_e	effective volume	8740	mm^3
l_e	effective length	89.7	mm
A_e	effective area	97.5	mm^2
m	mass of core	≈ 40	g

Coating

The cores are coated with epoxy, flame retardant in accordance with *"UL 94V-0"*; UL file number E 228348.
The colour is white.
Maximum operating temperature is 200 °C.

Isolation voltage

DC isolation voltage: 2000 V.
Contacts are applied on the edge of the ring core, which is also the critical point for the winding operation.

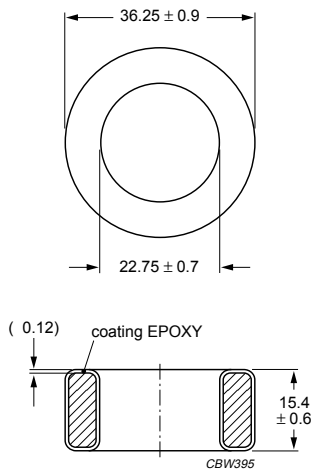

Dimensions in mm.

Fig.1 TX36/23/15 ring core.

Ring core data

GRADE	A_L (nH)	μ_i	TYPE NUMBER
4C65	170 ± 25%	≈ 125	TX36/23/15-4C65
4A11	940 ± 25%	≈ 700[1]	TX36/23/15-4A11
3R1[2]	–	≈ 800	TX36/23/15-3R1
3S4 des	2285 ± 25%	≈ 1700	TX36/23/15-3S4
3F3	2420 ± 25%	≈ 1800	TX36/23/15-3F3
3C90	3090 ± 20%	≈ 2300	TX36/23/15-3C90
3C81	3670 ± 20%	≈ 2700	TX36/23/15-3C81
3C11	5800 ± 25%	≈ 4300	TX36/23/15-3C11
3E25	7390 ± 25%	≈ 5500	TX36/23/15-3E25
3E27 des	6800 ± 20%	≈ 5000	TX36/23/15-3E27
3E5	11400 ± 30%	≈ 8500	TX36/23/15-3E5
3E6	13600 ± 30%	≈ 10400	TX36/23/15-3E6

1. Old permeability specification maintained.
2. Due to the rectangular BH-loop of 3R1, inductance values strongly depend on the magnetic state of the ring core and measuring conditions. Therefore no A_L value is specified. For the application in magnetic amplifiers A_L is not a critical parameter.

WARNING
Do not use 3R1 cores close to their mechanical resonant frequency. For more information refer to *“3R1”* material specification in this data handbook.

Properties of cores under power conditions

GRADE	B (mT) at	CORE LOSS (W) at		
	H = 250 A/m; f = 25 kHz; T = 100 °C	**f = 25 kHz; $\hat{B}$ = 200 mT; T = 100 °C**	**f = 100 kHz; $\hat{B}$ = 100 mT; T = 100 °C**	**f = 400 kHz; $\hat{B}$ = 50 mT; T = 100 °C**
3C81	≥320	≤ 1.7	–	–
3C90	≥320	≤ 0.96	≤ 0.96	–
3F3	≥320	–	≤0.95	≤1.7

RING CORES (TOROIDS)

Effective core parameters

SYMBOL	PARAMETER	VALUE	UNIT
Σ(l/A)	core factor (C1)	0.76	mm^{-1}
V_e	effective volume	9513	mm^3
l_e	effective length	84.9	mm
A_e	effective area	112	mm^2
m	mass of core	≈ 45	g

Coating

The cores are coated with epoxy, flame retardant in accordance with *"UL 94V-0"*; UL file number E 228348.
The colour is white.
Maximum operating temperature is 200 °C.

Isolation voltage

DC isolation voltage: 2000 V.
Contacts are applied on the edge of the ring core, which is also the critical point for the winding operation.

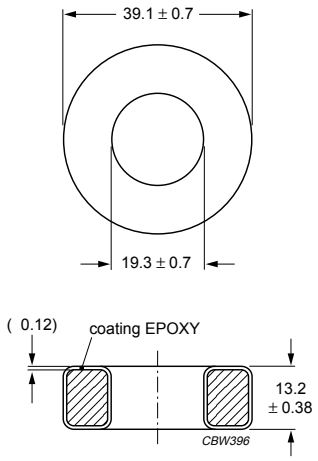

Dimensions in mm.

Fig.1 TX39/20/13 ring core.

Ring core data

GRADE	A_L (nH)	μ_i	TYPE NUMBER
3F3	3150 ± 20%	≈ 1800	TX39/20/13-3F3
3C90	3800 ± 20%	≈ 2300	TX39/20/13-3C90
3C81	4700 ± 20%	≈ 2700	TX39/20/13-3C81
3E27	8720 ± 20%	≈ 5000	TX39/20/13-3E27
3E6 des	16700 ± 30%	≈ 9600	TX39/20/13-3E6

Properties of cores under power conditions

GRADE	B (mT) at	CORE LOSS (W) at		
	H = 250 A/m; f = 25 kHz; T = 100 °C	f = 25 kHz; $\hat{B}$ = 200 mT; T = 100 °C	f = 100 kHz; $\hat{B}$ = 100 mT; T = 100 °C	f = 400 kHz; $\hat{B}$ = 50 mT; T = 100 °C
3C81	≥320	≤1.9	–	–
3C90	≥320	≤1.1	≤1.1	–
3F3	≥320	–	≤1.1	≤1.8

RING CORES (TOROIDS)

Effective core parameters

SYMBOL	PARAMETER	VALUE	UNIT
Σ(l/A)	core factor (C1)	0.769	mm^{-1}
V_e	effective volume	12100	mm^3
l_e	effective length	96.3	mm
A_e	effective area	125	mm^2
m	mass of core	≈ 62	g

Coating

The cores are coated with epoxy, flame retardant in accordance with *"UL 94V-0"*; UL file number E 228348.
The colour is white.
Maximum operating temperature is 200 °C.

Isolation voltage

DC isolation voltage: 2000 V.
Contacts are applied on the edge of the ring core, which is also the critical point for the winding operation.

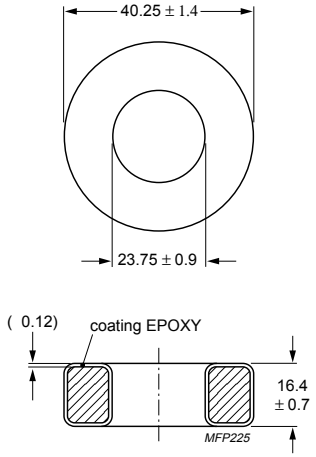

Dimensions in mm.

Fig.1 TX40/24/16 ring core.

Ring core data

GRADE	A_L (nH)	μ_i	TYPE NUMBER
3F3	3000 ± 25 %	≈ 1835	TX40/24/16-3F3
3C90	3500 ± 25 %	≈ 2140	TX40/24/16-3C90
3C11	6800 ± 25 %	≈ 4160	TX40/24/16-3C11
3E26	10800 ± 25 %	≈ 6610	TX40/24/16-3E26
3E27	9363 ± 25 %	≈ 5730	TX40/24/16-3E27
3E5	12900 ± 30 %	≈ 7890	TX40/24/16-3E5

Properties of cores under power conditions

GRADE	B (mT) at	CORE LOSS (W) at		
	H = 250 A/m; f = 25 kHz; T = 100 °C	f = 25 kHz; $\hat{B}$ = 200 mT; T = 100 °C	f = 100 kHz; $\hat{B}$ = 100 mT; T = 100 °C	f = 400 kHz; $\hat{B}$ = 50 mT; T = 100 °C
3C90	≥ 320	≤1.4	≤1.4	–
3F3	≥ 320	–	≤1.4	≤ 2.3

RING CORES (TOROIDS)

Effective core parameters

SYMBOL	PARAMETER	VALUE	UNIT
$\Sigma(l/A)$	core factor (C1)	0.615	mm^{-1}
V_e	effective volume	15100	mm^3
l_e	effective length	96.3	mm
A_e	effective area	157	mm^2
m	mass of core	≈ 77	g

Coating

The cores are coated with epoxy, flame retardant in accordance with *"UL 94V-0"*; UL file number E 228348.
The colour is white.
Maximum operating temperature is 200 °C.

Isolation voltage

DC isolation voltage: 2000 V.
Contacts are applied on the edge of the ring core, which is also the critical point for the winding operation.

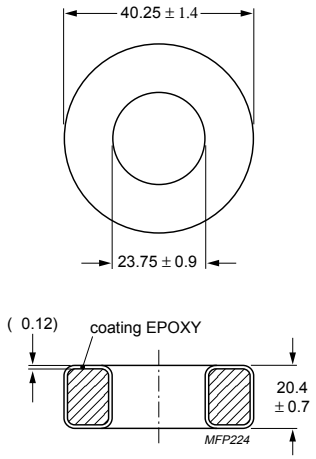

Dimensions in mm.

Fig.1 TX40/24/20 ring core.

Ring core data

GRADE	A_L (nH)	μ_i	TYPE NUMBER
3E27	11600 ± 25 %	≈ 5680	TX40/24/20-3E27
3E5	16300 ± 30 %	≈ 7980	TX40/24/20-3E5

RING CORES (TOROIDS)

Effective core parameters

SYMBOL	PARAMETER	VALUE	UNIT
$\Sigma(l/A)$	core factor (C1)	1.076	mm^{-1}
V_e	effective volume	9860	mm^3
l_e	effective length	103	mm
A_e	effective area	95.8	mm^2
m	mass of core	≈ 53	g

Coating

The cores are coated with epoxy, flame retardant in accordance with *"UL 94V-0"*; UL file number E 228348.
The colour is white.
Maximum operating temperature is 200 °C.

Isolation voltage

DC isolation voltage: 2000 V.
Contacts are applied on the edge of the ring core, which is also the critical point for the winding operation.

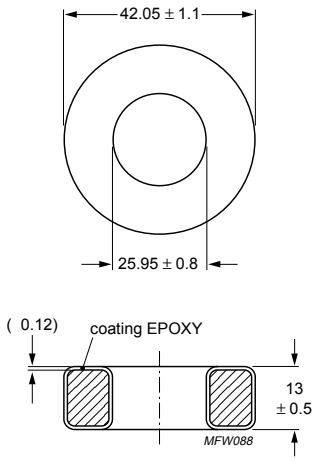

Dimensions in mm.

Fig.1 TX42/26/13 ring core.

Ring core data

GRADE	A_L (nH)	μ_i	TYPE NUMBER
3C90	2690 ± 25%	≈ 2300	TX42/26/13-3C90
3C11	5000 ± 25%	≈ 4300	TX42/26/13-3C11
3E25	6425 ± 25%	≈ 5500	TX42/26/13-3E25
3E27	6425 ± 25%	≈ 5500	TX42/26/13-3E27
4A11	820 ± 25%	≈ 700[1]	TX42/26/13-4A11

1. Old permeability specification maintained.

Properties of cores under power conditions

GRADE	B (mT) at	CORE LOSS (W) at	
	H = 250 A/m; f = 25 kHz; T = 100 °C	f = 25 kHz; $\hat{B}$ = 200 mT; T = 100 °C	f = 100 kHz; $\hat{B}$ = 100 mT; T = 100 °C
3C90	≥320	≤ 1.1	≤ 1.1

RING CORES (TOROIDS)

Effective core parameters

SYMBOL	PARAMETER	VALUE	UNIT
$\Sigma(l/A)$	core factor (C1)	0.769	mm^{-1}
V_e	effective volume	13810	mm^3
l_e	effective length	103	mm
A_e	effective area	134	mm^2
m	mass of core	≈ 55	g

Coating

The cores are coated with epoxy, flame retardant in accordance with *"UL 94V-0"*; UL file number E 228348.
The colour is white.
Maximum operating temperature is 200 °C.

Isolation voltage

DC isolation voltage: 2000 V.
Contacts are applied on the edge of the ring core, which is also the critical point for the winding operation.

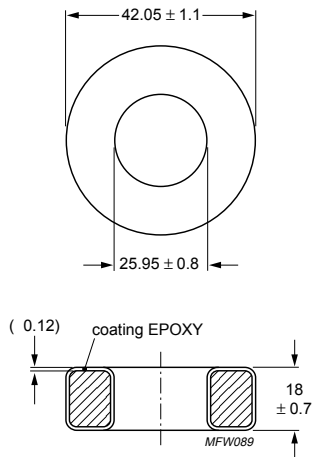

Dimensions in mm.

Fig.1 TX42/26/18 ring core.

Ring core data

GRADE	A_L (nH)	μ_i	TYPE NUMBER
3E5	12900 ± 30%	≈ 8500	TX42/26/18-3E5

RING CORES (TOROIDS)

Effective core parameters

SYMBOL	PARAMETER	VALUE	UNIT
Σ(l/A)	core factor (C1)	0.65	mm^{-1}
V_e	effective volume	22378	mm^3
l_e	effective length	120.4	mm
A_e	effective area	186	mm^2
m	mass of core	≈ 100	g

Coating

The cores are coated with epoxy, flame retardant in accordance with *"UL 94V-0"*; UL file number E 228348.
The colour is white.
Maximum operating temperature is 200 °C.

Isolation voltage

DC isolation voltage: 2000 V.
Contacts are applied on the edge of the ring core, which is also the critical point for the winding operation.

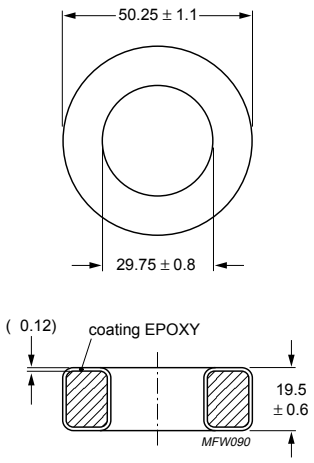

Dimensions in mm.

Fig.1 TX50/30/19 ring core.

Ring core data

GRADE	A_L (nH)	μ_i	TYPE NUMBER
3E6 des	19400 ± 30%	≈ 10000	TX50/30/19-3E6

RING CORES (TOROIDS)

Effective core parameters

SYMBOL	PARAMETER	VALUE	UNIT
Σ(l/A)	core factor (C1)	0.73	mm^{-1}
V_e	effective volume	21500	mm^3
l_e	effective length	125	mm
A_e	effective area	172	mm^2
m	mass of core	≈ 100	g

Coating

The cores are coated with epoxy, flame retardant in accordance with *"UL 94V-0"*; UL file number E 235873.
The colour is white.
Maximum operating temperature is 200 °C.

Isolation voltage

DC isolation voltage: 2000 V.
Contacts are applied on the edge of the ring core, which is also the critical point for the winding operation.

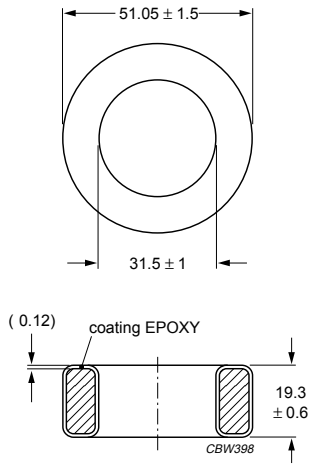

Dimensions in mm.

Fig.1 TX51/32/19 ring core.

Ring core data

GRADE	A_L (nH)	μ_i	TYPE NUMBER
3F3 des	3200 ± 20%	≈ 1800	TX51/32/19-3F3
3C90	3980 ± 20%	≈ 2300	TX51/32/19-3C90
3C81	4800 ± 20%	≈ 2700	TX51/32/19-3C81
3E25	8890 ± 20%	≈ 5000	TX51/32/19-3E25
3E27 des	8890 ± 20%	≈ 5000	TX51/32/19-3E27
3E6	17300 ± 30%	≈ 10000	TX51/32/19-3E6

Properties of cores under power conditions

GRADE	B (mT) at	CORE LOSS (W) at		
	H = 250 A/m; f = 25 kHz; T = 100 °C	f = 25 kHz; $\hat{B}$ = 200 mT; T = 100 °C	f = 100 kHz; $\hat{B}$ = 100 mT; T = 100 °C	f = 400 kHz; $\hat{B}$ = 50 mT; T = 100 °C
3C81	≥320	≤ 4.4	–	–
3C90	≥320	≤ 2.4	≤ 2.4	–
3F3	≥320	–	≤ 2.4	≤ 4.1

RING CORES (TOROIDS)

Effective core parameters

SYMBOL	PARAMETER	VALUE	UNIT
$\Sigma(l/A)$	core factor (C1)	0.651	mm^{-1}
V_e	effective volume	26580	mm^3
l_e	effective length	132	mm
A_e	effective area	202	mm^2
m	mass of core	≈ 134	g

Coating

The cores are coated with epoxy, flame retardant in accordance with *"UL 94V-0"*; UL file number E 235873.
The colour is white.
Maximum operating temperature is 200 °C.

Isolation voltage

DC isolation voltage: 2000 V.
Contacts are applied on the edge of the ring core, which is also the critical point for the winding operation.

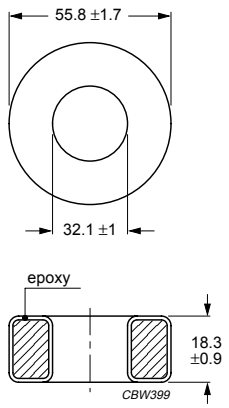

Dimensions in mm.

Fig.1 TX55/32/18 ring core.

Ring core data

GRADE	A_L (nH)	μ_i	TYPE NUMBER
4A11	1350 ± 25%	≈ 700[1]	TX55/32/18-4A11
3C11	8300 ± 25%	≈ 4300	TX55/32/18-3C11
3E25	10620 ± 25%	≈ 5500	TX55/32/18-3E25
3E27	10620 ± 25%	≈ 5500	TX55/32/18-3E27

1. Old permeability specification maintained.

RING CORES (TOROIDS)

Effective core parameters

SYMBOL	PARAMETER	VALUE	UNIT
$\Sigma(l/A)$	core factor (C1)	1.0	mm^{-1}
V_e	effective volume	23200	mm^3
l_e	effective length	152	mm
A_e	effective area	152	mm^2
m	mass of core	≈ 110	g

Coating

The cores are coated with epoxy, flame retardant in accordance with *"UL 94V-0"*; UL file number E 235873.
The colour is white.
Maximum operating temperature is 200 °C.

Isolation voltage

DC isolation voltage: 2000 V.
Contacts are applied on the edge of the ring core, which is also the critical point for the winding operation.

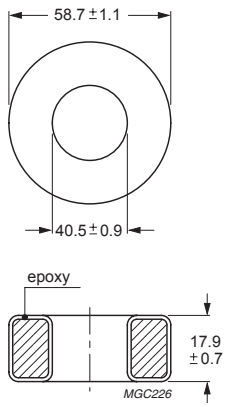

Dimensions in mm.

Fig.1 TX58/41/18 ring core.

Ring core data

GRADE	A_L (nH)	μ_i	TYPE NUMBER
3C90 des	2890 ± 25%	≈ 2300	TX58/41/18-3C90
3C11	5400 ± 25%	≈ 4300	TX58/41/18-3C11
3E25	6900 ± 25%	≈ 5500	TX58/41/18-3E25

Properties of cores under power conditions

GRADE	B (mT) at	CORE LOSS (W) at	
	H = 250 A/m; f = 25 kHz; T = 100 °C	f = 25 kHz; $\hat{B}$ = 200 mT; T = 100 °C	f = 100 kHz; $\hat{B}$ = 100 mT; T = 100 °C
3C90	≥320	≤ 2.6	≤ 2.6

RING CORES (TOROIDS)

Effective core parameters

SYMBOL	PARAMETER	VALUE	UNIT
$\Sigma(l/A)$	core factor (C1)	0.497	mm^{-1}
V_e	effective volume	46500	mm^3
l_e	effective length	152	mm
A_e	effective area	306	mm^2
m	mass of core	≈ 220	g

Coating

The cores are coated with epoxy, flame retardant in accordance with *"UL 94V-0"*; UL file number E 235873.
The colour is white.
Maximum operating temperature is 200 °C.

Isolation voltage

DC isolation voltage: 2000 V.
Contacts are applied on the edge of the ring core, which is also the critical point for the winding operation.

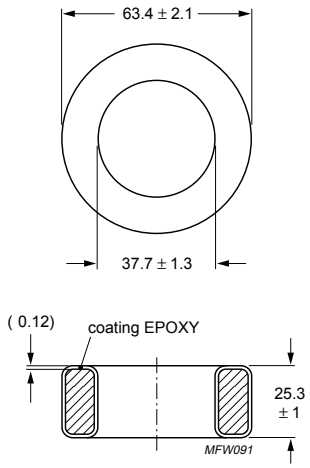

Dimensions (uncoated) in mm.

Fig.1 TX63/38/25 ring core.

Ring core data

GRADE	A_L (nH)	μ_i	TYPE NUMBER
3F3	4550 ± 25 %	≈ 1800	TX63/38/25-3F3
3E25	13900 ± 25 %	≈ 5500	TX63/38/25-3E25
3E6 des	25280 ± 30 %	≈ 10000	TX63/38/25-3E6

Properties of cores under power conditions

GRADE	B (mT) at	CORE LOSS (W) at	
	H = 250 A/m; f = 25 kHz; T = 100 °C	f = 100 kHz; $\hat{B}$ = 100 mT; T = 100 °C	f = 400 kHz; $\hat{B}$ = 50 mT; T = 100 °C
3F3	≥320	≤ 5.1	≤ 8.8

RING CORES (TOROIDS)

Effective core parameters

SYMBOL	PARAMETER	VALUE	UNIT
Σ(l/A)	core factor (C1)	0.80	mm^{-1}
V_e	effective volume	34300	mm^3
l_e	effective length	165	mm
A_e	effective area	208	mm^2
m	mass of core	≈ 170	g

Coating

The cores are coated with epoxy, flame retardant in accordance with *"UL 94V-0"*; UL file number E 235873.
The colour is white.
Maximum operating temperature is 200 °C.

Isolation voltage

DC isolation voltage: 2000 V.
Contacts are applied on the edge of the ring core, which is also the critical point for the winding operation.

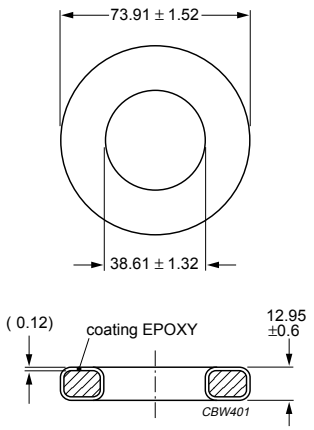

Dimensions in mm.

Fig.1 TX74/39/13 ring core.

Ring core data

GRADE	A_L (nH)	μ_i	TYPE NUMBER
3F3	2900 ± 20%	≈ 1800	TX74/39/13-3F3
3C90 des	3620 ± 20%	≈ 2300	TX74/39/13-3C90
3C81	4350 ± 20%	≈ 2700	TX74/39/13-3C81
3E25	8060 ± 20%	≈ 5000	TX74/39/13-3E25
3E6 des	15776 ± 30%	≈ 10000	TX74/39/13-3E6

Properties of cores under power conditions

GRADE	B (mT) at	CORE LOSS (W) at		
	H = 250 A/m; f = 25 kHz; T = 100 °C	$\hat{f}$ = 25 kHz; $\hat{B}$ = 200 mT; T = 100 °C	$\hat{f}$ = 100 kHz; $\hat{B}$ = 100 mT; T = 100 °C	$\hat{f}$ = 400 kHz; $\hat{B}$ = 50 mT; T = 100 °C
3C81	≥320	≤ 7.0	–	–
3C90	≥320	≤ 4.0	≤ 4.0	–
3F3	≥320	–	≤ 3.8	≤ 8.1

RING CORES (TOROIDS)

Effective core parameters

SYMBOL	PARAMETER	VALUE	UNIT
$\Sigma(l/A)$	core factor (C1)	0.604	mm^{-1}
V_e	effective volume	50200	mm^3
l_e	effective length	174	mm
A_e	effective area	288	mm^2
m	mass of core	≈ 240	g

Coating

The cores are coated with epoxy, flame retardant in accordance with *"UL 94V-0"*; UL file number E 235873.
The colour is white.
Maximum operating temperature is 200 °C.

Isolation voltage

DC isolation voltage: 2000 V.
Contacts are applied on the edge of the ring core, which is also the critical point for the winding operation.

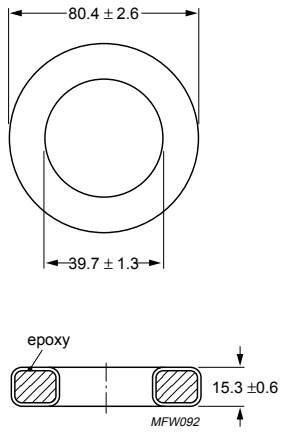

Dimensions in mm.

Fig.1 TX80/40/15 ring core.

Ring core data

GRADE	A_L (nH)	μ_i	TYPE NUMBER
3C90	4780 ± 25%	≈ 2300	TX80/40/15-3C90

Properties of cores under power conditions

GRADE	B (mT) at	CORE LOSS (W) at	
	H = 250 A/m; f = 25 kHz; T = 100 °C	f = 25 kHz; $\hat{B}$ = 200 mT; T = 100 °C	f = 100 kHz; $\hat{B}$ = 100 mT; T = 100 °C
3C90	≥320	≤ 6.0	≤ 6.0

RING CORES (TOROIDS)

Effective core parameters

SYMBOL	PARAMETER	VALUE	UNIT
$\Sigma(l/A)$	core factor (C1)	0.987	mm^{-1}
V_e	effective volume	46400	mm^3
l_e	effective length	214	mm
A_e	effective area	217	mm^2
m	mass of core	≈ 220	g

Coating

The cores are coated with epoxy, flame retardant in accordance with *"UL 94V-0"*; UL file number E 235873.
The colour is white.
Maximum operating temperature is 200 °C.

Isolation voltage

DC isolation voltage: 2000 V.
Contacts are applied on the edge of the ring core, which is also the critical point for the winding operation.

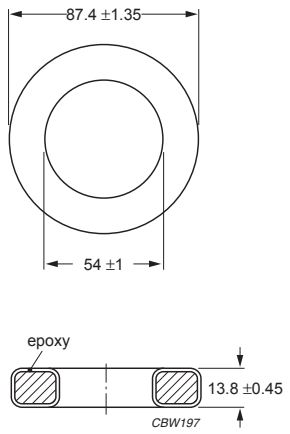

Dimensions in mm.

Fig.1 TX87/54/14 ring core.

Ring core data

GRADE	A_L (nH)	μ_i	TYPE NUMBER
3C90 des	2930 ± 25%	≈ 2300	TX87/54/14-3C90
3C11 des	5470 ± 25%	≈ 4300	TX87/54/14-3C11

Properties of cores under power conditions

GRADE	B (mT) at	CORE LOSS (W) at	
	H = 250 A/m; f = 25 kHz; T = 100 °C	f = 25 kHz; $\hat{B}$ = 200 mT; T = 100 °C	f = 100 kHz; $\hat{B}$ = 100 mT; T = 100 °C
3C90	≥320	≤ 5.5	≤ 5.5

RING CORES (TOROIDS)

Effective core parameters

SYMBOL	PARAMETER	VALUE	UNIT
$\Sigma(l/A)$	core factor (C1)	1.123	mm^{-1}
V_e	effective volume	42 133	mm^3
l_e	effective length	217.5	mm
A_e	effective area	194	mm^2
m	mass of core	≈ 200	g

Coating

Coated cores are available on request.

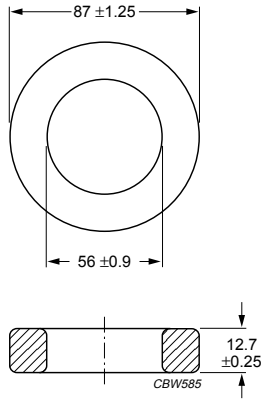

Dimensions in mm.

Fig.1 T87/56/13 ring core.

Ring core data

GRADE	A_L (nH)	μ_i	TYPE NUMBER
3E6 des	11 190 ± 30%	≈ 10 000	T87/56/13-3E6

RING CORES (TOROIDS)

Effective core parameters

SYMBOL	PARAMETER	VALUE	UNIT
$\Sigma(l/A)$	core factor (C1)	0.956	mm^{-1}
V_e	effective volume	68200	mm^3
l_e	effective length	255	mm
A_e	effective area	267	mm^2
m	mass of core	≈ 325	g

Coating

The cores are coated with epoxy, flame retardant in accordance with *"UL 94V-0"*; UL file number E 235873.
The colour is white.
Maximum operating temperature is 200 °C.

Isolation voltage

DC isolation voltage: 2000 V.
Contacts are applied on the edge of the ring core, which is also the critical point for the winding operation.

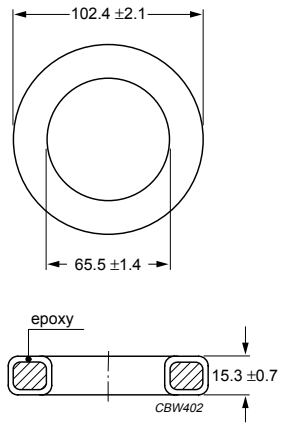

Dimensions in mm.

Fig.1 TX102/66/15 ring core.

Ring core data

GRADE	A_L (nH)	μ_i	TYPE NUMBER
4C65 des	165 ± 25%	≈ 125	TX102/66/15-4C65
3C11 des	5300 ± 25%	≈ 4300	TX102/66/15-3C11
3E25 des	7900 ± 25%	≈ 5500	TX102/66/15-3E25

RING CORES (TOROIDS)

Effective core parameters

SYMBOL	PARAMETER	VALUE	UNIT
$\Sigma(l/A)$	core factor (C1)	0.700	mm^{-1}
V_e	effective volume	96000	mm^3
l_e	effective length	259	mm
A_e	effective area	370	mm^2
m	mass of core	≈ 456	g

Coating

Coated cores are available on request.

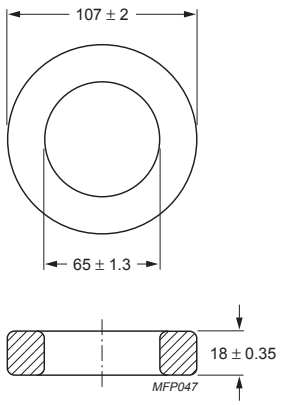

Dimensions in mm.

Fig.1 T107/65/18 ring core.

Ring core data

GRADE	A_L (nH)	μ_i	TYPE NUMBER
3F4 des	1354 ± 25%	≈ 750	T107/65/18-3F4

RING CORES (TOROIDS)

Effective core parameters

SYMBOL	PARAMETER	VALUE	UNIT
$\Sigma(l/A)$	core factor (C1)	0.700	mm^{-1}
V_e	effective volume	96000	mm^3
l_e	effective length	259	mm
A_e	effective area	370	mm^2
m	mass of core	≈ 456	g

Coating

The cores are coated with epoxy, flame retardant in accordance with *"UL 94V-0"*; UL file number E 235873.
The colour is white.
Maximum operating temperature is 200 °C.

Isolation voltage

DC isolation voltage: 2000 V.
Contacts are applied on the edge of the ring core, which is also the critical point for the winding operation.

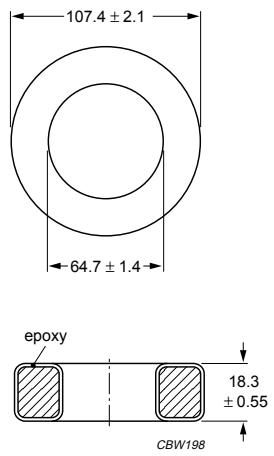

Dimensions in mm.

Fig.1 TX107/65/18 ring core.

Ring core data

GRADE	A_L (nH)	μ_i	TYPE NUMBER
3F3	3230 ± 25%	≈ 1800	TX107/65/18-3F3
3E25	9900 ± 25%	≈ 5500	TX107/65/18-3E25

Properties of cores under power conditions

GRADE	B (mT) at	CORE LOSS (W) at	
	H = 250 A/m; f = 25 kHz; T = 100 °C	f = 100 kHz; $\hat{B}$ = 100 mT; T = 100 °C	f = 400 kHz; $\hat{B}$ = 50 mT; T = 100 °C
3F3	≥320	≤ 10.6	≤ 18.2

RING CORES (TOROIDS)

Effective core parameters

SYMBOL	PARAMETER	VALUE	UNIT
$\Sigma(l/A)$	core factor (C1)	0.504	mm^{-1}
V_e	effective volume	133000	mm^3
l_e	effective length	259	mm
A_e	effective area	514	mm^2
m	mass of core	≈ 680	g

Coating

Coated cores are available on request.

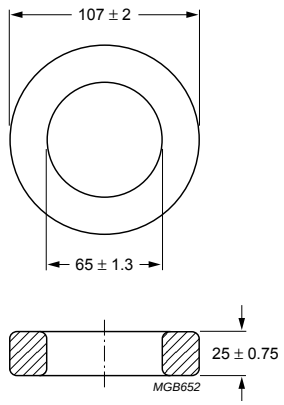

Dimensions in mm.

Fig.1 T107/65/25 ring core.

Ring core data

GRADE	A_L (nH)	μ_i	TYPE NUMBER
3F4 des	1870 ± 25%	≈ 750	T107/65/25-3F4
3F3 des	4485 ± 25%	≈ 1800	T107/65/25-3F3

RING CORES (TOROIDS)

Effective core parameters

SYMBOL	PARAMETER	VALUE	UNIT
$\Sigma(l/A)$	core factor (C1)	0.903	mm^{-1}
V_e	effective volume	161100	mm^3
l_e	effective length	382	mm
A_e	effective area	422	mm^2
m	mass of core	≈ 800	g

Coating

Coated cores are available on request.

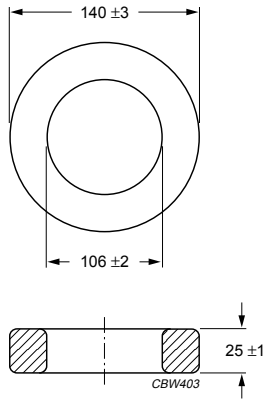

Dimensions in mm.

Fig.1 T140/106/25 ring core.

Ring core data

GRADE	A_L (nH)	μ_i	TYPE NUMBER
3C90	3200 ± 20%	≈ 2300	T140/106/25-3C90
3E25	7700 ± 30%	≈ 5500	T140/106/25-3E25

Properties of cores under power conditions

GRADE	B (mT) at	CORE LOSS (W) at	
	H = 250 A/m; f = 25 kHz; T = 100 °C	f = 25 kHz; $\hat{B}$ = 200 mT; T = 100 °C	f = 100 kHz; $\hat{B}$ = 100 mT; T = 100 °C
3C90	≥320	≤ 22.7	≤ 22.7

RING CORES (TOROIDS)

Effective core parameters

SYMBOL	PARAMETER	VALUE	UNIT
$\Sigma(l/A)$	core factor (C1)	0.903	mm^{-1}
V_e	effective volume	161100	mm^3
l_e	effective length	382	mm
A_e	effective area	422	mm^2
m	mass of core	≈ 800	g

Coating

The cores are coated with epoxy, flame retardant in accordance with *"UL 94V-0"*; UL file number E 235873.
The colour is white.
Maximum operating temperature is 200 °C.

Isolation voltage

DC isolation voltage: 2000 V.
Contacts are applied on the edge of the ring core, which is also the critical point for the winding operation.

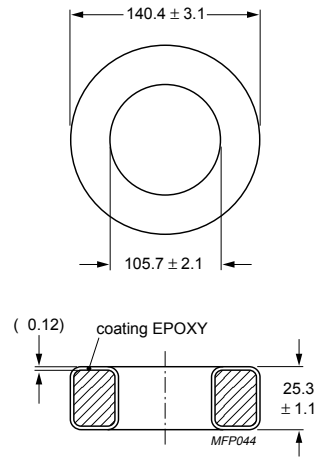

Dimensions in mm.

Fig.1 TX140/106/25 ring core.

Ring core data

GRADE	A_L (nH)	μ_i	TYPE NUMBER
3C90	3200 ± 20%	≈ 2300	TX140/106/25-3C90
3E25	7700 ± 30%	≈ 5500	TX140/106/25-3E25

Properties of cores under power conditions

GRADE	B (mT) at	CORE LOSS (W) at	
	H = 250 A/m; f = 25 kHz; T = 100 °C	f = 25 kHz; $\hat{B}$ = 200 mT; T = 100 °C	f = 100 kHz; $\hat{B}$ = 100 mT; T = 100 °C
3C90	≥320	≤ 22.7	≤ 22.7

RING CORES (TOROIDS)

Effective core parameters

SYMBOL	PARAMETER	VALUE	UNIT
$\Sigma(l/A)$	core factor (C1)	0.873	mm^{-1}
V_e	effective volume	176600	mm^3
l_e	effective length	393	mm
A_e	effective area	450	mm^2
m	mass of core	≈ 878	g

Coating

Coated cores are available on request.

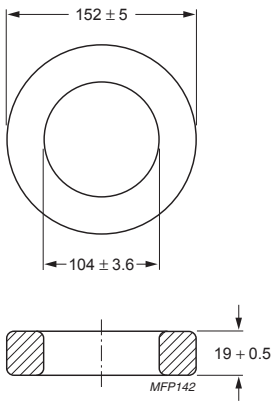

Dimensions in mm.

Fig.1 T152/104/19 ring core.

Ring core data

GRADE	A_L (nH)	μ_i	TYPE NUMBER
3C11	6000 ± 25 %	≈ 4300	T152/104/19-3C11
3E27	8500 ± 25 %	≈ 6000	T152/104/19-3E27

Alloy powder

Alloy powder toroids

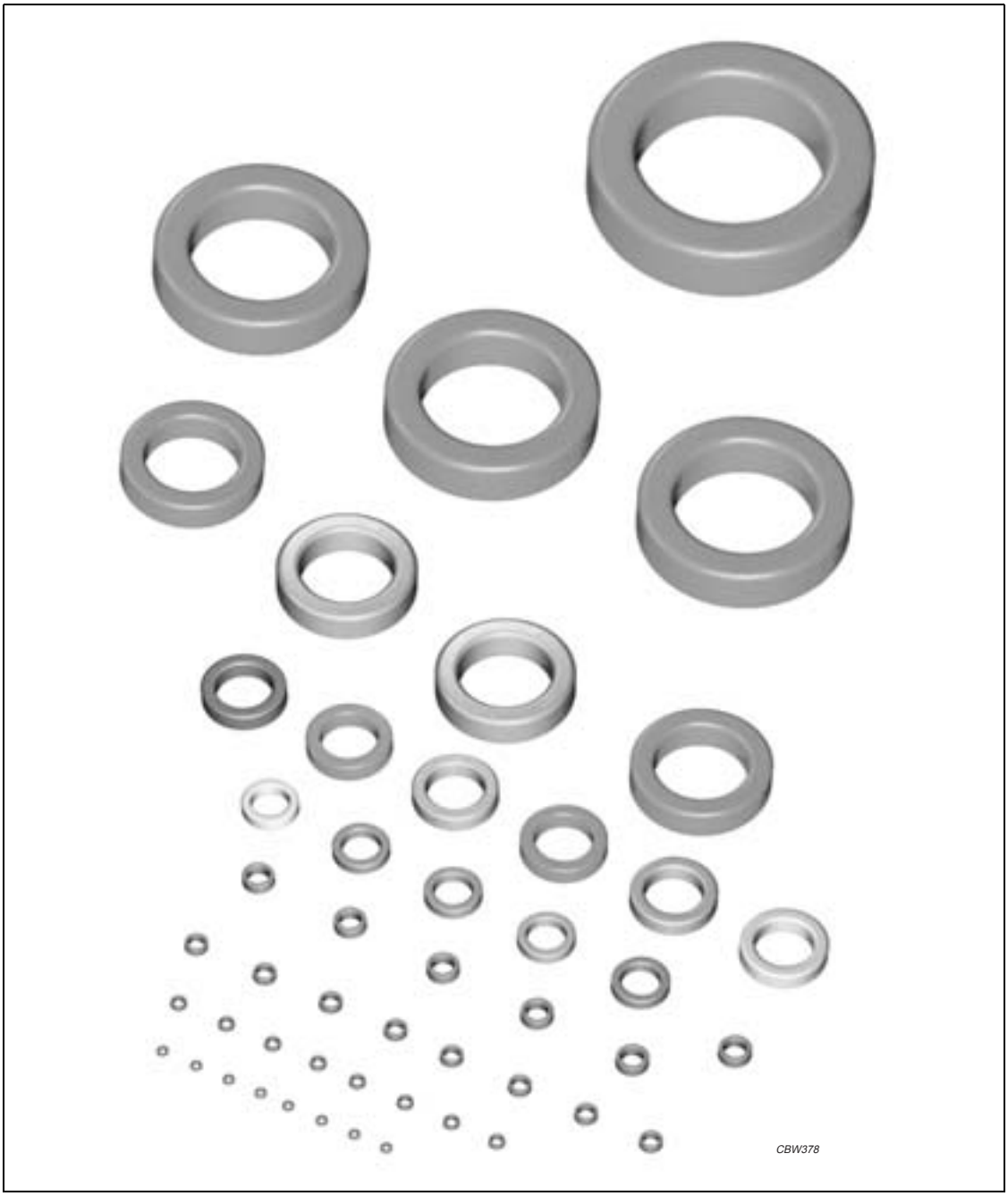

PRODUCT OVERVIEW AND TYPE NUMBER STRUCTURE

Product overview Alloy powder ring cores (toroids)

CORE TYPE	V_e (mm^3)	A_e (mm^2)	MASS (FOR μ_i 125) (g)		
			MPP	SD	HF
TX3.6/1.8/1.5	11.2	1.37	0.09	0.07	–
TX3.9/2.2/2.5	19.9	2.11	0.17	0.12	–
TX4.7/2.4/2.5	30.3	2.85	0.25	0.18	–
TX6.4/2.8/2.8	64.0	4.70	0.59	0.39	0.55
TX6.6/2.7/2.5	64.9	4.76	0.58	0.40	0.55
TX6.6/2.7/4.8	125	9.20	1.09	0.77	1.03
TX6.9/4/5.1	120	7.25	1.00	0.74	0.94
TX7.9/4/3.2	110	6.15	0.92	0.68	0.87
TX9.7/4.8/3.2	164	7.52	1.40	1.01	1.30
TX9.7/4.8/4	206	9.45	1.80	1.44	1.70
TX10/5.1/4	238	10.0	1.91	1.46	1.80
TX11/6.4/4	244	9.06	2.12	1.50	1.99
TX13/7.6/4.8	356	11.4	3.07	2.20	2.90
TX16/10/6.4	789	19.2	6.78	4.98	6.34
TX17/9.7/6.4	960	23.2	8.16	5.90	7.70
TX20/13/6.4	1150	22.6	9.40	7.10	8.90
TX23/14/7.6	1880	33.1	15.9	11.5	15.0
TX24/14/8.9	2280	38.8	19.9	14.0	18.8
TX27/15/11	4150	65.4	35.8	25.5	33.8
TX33/20/11	5480	67.2	46.9	33.7	44.2
TX34/23/8.9	4060	45.4	34.9	25.0	32.9
TX36/22/11	6090	67.8	51.8	37.4	48.9
TX40/24/15	10500	107	91.7	64.9	86.5
TX47/24/18	21300	199	181	131	171
TX47/28/15	15600	134	130	95.8	123
TX51/32/14	15900	125	141	98.1	133
TX57/26/15	28600	229	240	176	226
TX57/36/14	20650	144	175	127	165
TX78/49/13	34700	177	288	200(1)	272
TX78/49/16	45300	227	377	262(1)	356

- Mass is valid for material permeability 125.

For relative masses of toroids in other permeabilities, see table 1.

(1) for material permeability 60.

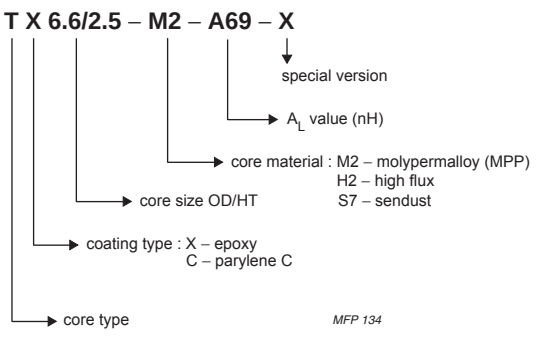

Fig.1 Type number structure for toroids.

Table 1 Relative core masses

MATERIAL PERMEABILITY	RELATIVE DENSITY
14	0.80
26	0.86
60	0.94
75	0.96
90	0.97
125	1.00
160	1.02
200	1.03
300	1.03

RING CORES (TOROIDS)

Effective core parameters

SYMBOL	PARAMETER		VALUE	UNIT
$\Sigma(l/A)$	core factor (C1)		5.96	mm^{-1}
V_e	effective volume		11.2	mm^3
l_e	effective length		8.17	mm
A_e	effective area		1.37	mm^2
m	mass of core (for μ_i 125)	MPP	0.09	g
		Sendust	0.07	g

Coating

The cores are coated with epoxy. The colour is cream (Sendust), grey (MPP) or khaki (High-Flux). Maximum operating temperature is 200 °C. Parylene coating is also available (transparent, maximum operating temperature 130 °C).

Isolation voltage

AC isolation voltage : 1000 V (Parylene : 750 V). Contacts are applied on the edge of the ring core, which is also the critical point for the winding operation.

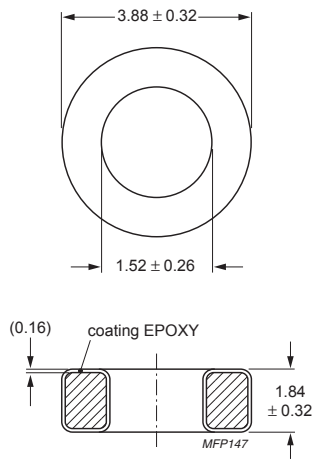

Dimensions in mm.

Fig.1 TX3.6/1.8/1.5 ring core.

Ring core data

GRADE	A_L (nH)	μ_i	B (mT) at H = 100 kA/m; f = 10 kHz; T = 25 °C	CORE LOSS (W) at $\hat{f}$ = 100 kHz; $\hat{B}$ = 100 mT; T = 25 °C	TYPE NUMBER
MPP	26 ± 8 %	125	≥ 800	0.008	TX3.6/1.5-M2-A26
	31 ± 8 %	147	≥ 800	0.009	TX3.6/1.5-M2-A31
	33 ± 8 %	160	≥ 800	0.009	TX3.6/1.5-M2-A33
	36 ± 8 %	173	≥ 800	0.009	TX3.6/1.5-M2-A36
	42 ± 8 %	200	≥ 800	0.017	TX3.6/1.5-M2-A42
	62 ± 8 %	300	≥ 800	0.017	TX3.6/1.5-M2-A62
Sendust	13 ± 15 %	60	≥ 1030	0.010	TX3.6/1.5-S7-A13
	16 ± 15 %	75	≥ 1040	0.010	TX3.6/1.5-S7-A16
	19 ± 15 %	90	≥ 1050	0.010	TX3.6/1.5-S7-A19
	26 ± 15 %	125	≥ 1060	0.010	TX3.6/1.5-S7-A26

RING CORES (TOROIDS)

Effective core parameters

SYMBOL	PARAMETER		VALUE	UNIT
$\Sigma(l/A)$	core factor (C1)		4.46	mm^{-1}
V_e	effective volume		19.9	mm^3
l_e	effective length		9.42	mm
A_e	effective area		2.11	mm^2
m	mass of core (for μ_i 125)	MPP	0.17	g
		Sendust	0.12	g

Coating

The cores are coated with epoxy. The colour is cream (Sendust), grey (MPP) or khaki (High-Flux). Maximum operating temperature is 200 °C. Parylene coating is also available (transparent, maximum operating temperature 130 °C).

Isolation voltage

AC isolation voltage : 1000 V (Parylene : 750 V). Contacts are applied on the edge of the ring core, which is also the critical point for the winding operation.

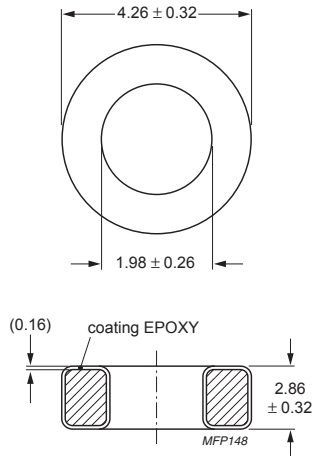

Dimensions in mm.

Fig.1 TX3.9/2.2/2.5 ring core.

Ring core data

GRADE	A_L (nH)	μ_i	B (mT) at H = 100 kA/m; f = 10 kHz; T = 25 °C	CORE LOSS (W) at $\hat{f}$ = 100 kHz; $\hat{B}$ = 100 mT; T = 25 °C	TYPE NUMBER
MPP	35 ± 8 %	125	≥ 800	0.015	TX3.9/2.5-M2-A35
	41 ± 8 %	147	≥ 800	0.016	TX3.9/2.5-M2-A41
	45 ± 8 %	160	≥ 800	0.016	TX3.9/2.5-M2-A45
	48 ± 8 %	173	≥ 800	0.016	TX3.9/2.5-M2-A48
	56 ± 8 %	200	≥ 800	0.030	TX3.9/2.5-M2-A56
	84 ± 8 %	300	≥ 800	0.030	TX3.9/2.5-M2-A84
Sendust	17 ± 15 %	60	≥ 1030	0.017	TX3.9/2.5-S7-A17
	21 ± 15 %	75	≥ 1040	0.017	TX3.9/2.5-S7-A21
	25 ± 15 %	90	≥ 1050	0.017	TX3.9/2.5-S7-A25
	35 ± 15 %	125	≥ 1060	0.017	TX3.9/2.5-S7-A35

RING CORES (TOROIDS)

Effective core parameters

SYMBOL	PARAMETER		VALUE	UNIT
$\Sigma(l/A)$	core factor (C1)		3.73	mm^{-1}
V_e	effective volume		30.3	mm^3
l_e	effective length		10.62	mm
A_e	effective area		2.85	mm^2
m	mass of core (for μ_i 125)	MPP	0.25	g
		Sendust	0.18	g

Coating

The cores are coated with epoxy. The colour is cream (Sendust), grey (MPP) or khaki (High-Flux). Maximum operating temperature is 200 °C. Parylene coating is also available (transparent, maximum operating temperature 130 °C).

Isolation voltage

AC isolation voltage : 1000 V (Parylene : 750 V). Contacts are applied on the edge of the ring core, which is also the critical point for the winding operation.

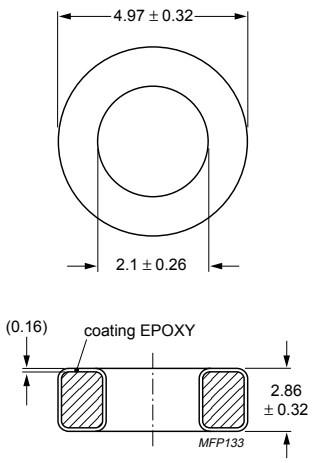

Dimensions in mm.

Fig.1 TX4.7/2.4/2.5 ring core.

Ring core data

GRADE	A_L (nH)	μ_i	B (mT) at H = 100 kA/m; f = 10 kHz; T = 25 °C	CORE LOSS (W) at f = 100 kHz; $\hat{B}$ = 100 mT; T = 25 °C	TYPE NUMBER
MPP	20 ± 8 %	60	≥ 760	0.023	TX4.7/2.5-M2-A20
	42 ± 8 %	125	≥ 800	0.023	TX4.7/2.5-M2-A42
	49 ± 8 %	147	≥ 800	0.024	TX4.7/2.5-M2-A49
	53 ± 8 %	160	≥ 800	0.024	TX4.7/2.5-M2-A53
	57 ± 8 %	173	≥ 800	0.024	TX4.7/2.5-M2-A57
	67 ± 8 %	200	≥ 800	0.045	TX4.7/2.5-M2-A67
	99 ± 8 %	300	≥ 800	0.045	TX4.7/2.5-M2-A99
Sendust	20 ± 15 %	60	≥ 1030	0.026	TX4.7/2.5-S7-A20
	25 ± 15 %	75	≥ 1040	0.026	TX4.7/2.5-S7-A25
	30 ± 15 %	90	≥ 1050	0.026	TX4.7/2.5-S7-A30
	42 ± 15 %	125	≥ 1060	0.026	TX4.7/2.5-S7-A42

RING CORES (TOROIDS)

Effective core parameters

SYMBOL	PARAMETER		VALUE	UNIT
Σ(l/A)	core factor (C1)		2.90	mm^{-1}
V_e	effective volume		64.0	mm^3
l_e	effective length		13.6	mm
A_e	effective area		4.70	mm^2
m	mass of core (for μ_i 125)	MPP	0.59	g
		Sendust	0.39	g
		High-Flux	0.55	g

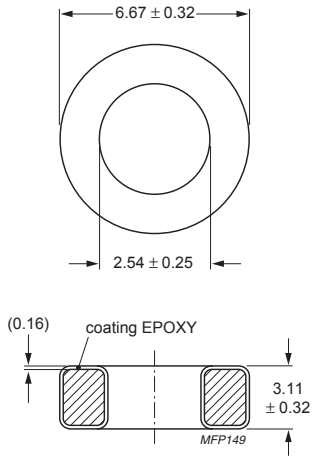

Dimensions in mm.

Fig.1 TX6.4/2.8/2.8 ring core.

Coating

The cores are coated with epoxy. The colour is black (Sendust), grey (MPP) or khaki (High-Flux). Maximum operating temperature is 200 °C. Parylene coating is also available (transparent, maximum operating temperature 130 °C).

Isolation voltage

AC isolation voltage : 1000 V (Parylene : 750 V). Contacts are applied on the edge of the ring core, which is also the critical point for the winding operation.

Ring core data - Note 1. Mechanical dimensions : OD ≤ 33.83, ID ≥ 19.3, H ≤ 11.61

GRADE	A_L (nH)	μ_i	B (mT) at H = 100 kA/m; f = 10 kHz; T = 25 °C	CORE LOSS (W) at f = 100 kHz; $\hat{B}$ = 100 mT; T = 25 °C	TYPE NUMBER
MPP	6 ± 8 %	14	≥ 640	0.096	TX6.4/2.8-M2-A6
	10 ± 8 %	26	≥ 700	0.077	TX6.4/2.8-M2-A10
	24 ± 8 %	60	≥ 760	0.048	TX6.4/2.8-M2-A24
	50 ± 8 %	125	≥ 800	0.048	TX6.4/2.8-M2-A50
	59 ± 8 %	147	≥ 800	0.051	TX6.4/2.8-M2-A59
	64 ± 8 %	160	≥ 800	0.051	TX6.4/2.8-M2-A64
	69 ± 8 %	173	≥ 800	0.051	TX6.4/2.8-M2-A69
	80 ± 8 %	200	≥ 800	0.096	TX6.4/2.8-M2-A80
	120 ± 8 %	300	≥ 800	0.096	TX6.4/2.8-M2-A120
Sendust (1)	24 ± 12 %	60	≥ 1030	0.055	TX6.4/2.8-S7-A24–MC
	30 ± 12 %	75	≥ 1040	0.055	TX6.4/2.8-S7-A30–MC
	36 ± 12 %	90	≥ 1050	0.055	TX6.4/2.8-S7-A36–MC
	50 ± 12 %	125	≥ 1060	0.055	TX6.4/2.8-S7-A50–MC
High-Flux	6 ± 8 %	14	≥ 890	0.160	TX6.4/2.8-H2-A6
	10 ± 8 %	26	≥ 980	0.128	TX6.4/2.8-H2-A10
	24 ± 8 %	60	≥ 1280	0.115	TX6.4/2.8-H2-A24
	50 ± 8 %	125	≥ 1370	0.128	TX6.4/2.8-H2-A50
	59 ± 8 %	147	≥ 1385	0.141	TX6.4/2.8-H2-A59
	64 ± 8 %	160	≥ 1400	0.224	TX6.4/2.8-H2-A64

RING CORES (TOROIDS)

Effective core parameters

SYMBOL	PARAMETER		VALUE	UNIT
$\Sigma(l/A)$	core factor (C1)		2.86	mm^{-1}
V_e	effective volume		64.9	mm^3
l_e	effective length		13.6	mm
A_e	effective area		4.76	mm^2
m	mass of core (for μ_i 125)	MPP	0.58	g
		Sendust	0.40	g
		High-Flux	0.55	g

Coating

The cores are coated with epoxy. The colour is cream (Sendust), grey (MPP) or khaki (High-Flux). Maximum operating temperature is 200 °C. Parylene coating is also available (transparent, maximum operating temperature 130 °C).

Isolation voltage

AC isolation voltage : 1000 V (Parylene : 750 V). Contacts are applied on the edge of the ring core, which is also the critical point for the winding operation.

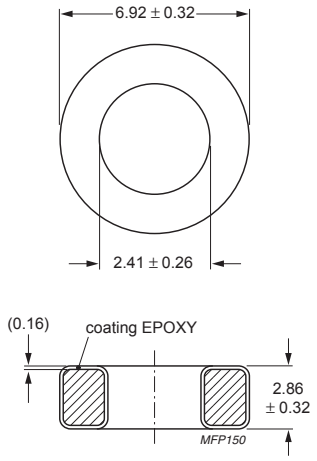

Dimensions in mm.

Fig.1 TX6.6/2.7/2.5 ring core.

GRADE	A_L (nH)	μ_i	B (mT) at H = 100 kA/m; f = 10 kHz; T = 25 °C	CORE LOSS (W) at f = 100 kHz; $\hat{B}$ = 100 mT; T = 25 °C	TYPE NUMBER
MPP	6 ± 8 %	14	≥ 640	0.097	TX6.6/2.5-M2-A6
	11 ± 8 %	26	≥ 700	0.078	TX6.6/2.5-M2-A11
	26 ± 8 %	60	≥ 760	0.049	TX6.6/2.5-M2-A26
	54 ± 8 %	125	≥ 800	0.049	TX6.6/2.5-M2-A54
	64 ± 8 %	147	≥ 800	0.052	TX6.6/2.5-M2-A64
	69 ± 8 %	160	≥ 800	0.052	TX6.6/2.5-M2-A69
	75 ± 8 %	173	≥ 800	0.052	TX6.6/2.5-M2-A75
	86 ± 8 %	200	≥ 800	0.097	TX6.6/2.5-M2-A86
	130 ± 8 %	300	≥ 800	0.097	TX6.6/2.5-M2-A130
Sendust	26 ± 12 %	60	≥ 1030	0.055	TX6.6/2.5-S7-A26
	32 ± 12 %	75	≥ 1040	0.055	TX6.6/2.5-S7-A32
	39 ± 12 %	90	≥ 1050	0.055	TX6.6/2.5-S7-A39
	54 ± 12 %	125	≥ 1060	0.055	TX6.6/2.5-S7-A54
High-Flux	6 ± 8 %	14	≥ 890	0.162	TX6.6/2.5-H2-A6
	11 ± 8 %	26	≥ 980	0.130	TX6.6/2.5-H2-A11
	26 ± 8 %	60	≥ 1280	0.117	TX6.6/2.5-H2-A26
	54 ± 8 %	125	≥ 1370	0.130	TX6.6/2.5-H2-A54
	64 ± 8 %	147	≥ 1385	0.143	TX6.6/2.5-H2-A64
	69 ± 8 %	160	≥ 1400	0.227	TX6.6/2.5-H2-A69

RING CORES (TOROIDS)

Effective core parameters

SYMBOL	PARAMETER		VALUE	UNIT
$\Sigma(l/A)$	core factor (C1)		1.48	mm^{-1}
V_e	effective volume		125	mm^3
l_e	effective length		13.6	mm
A_e	effective area		9.2	mm^2
m	mass of core (for μ_i 125)	MPP	1.09	g
		Sendust	0.77	g
		High-Flux	1.03	g

Coating

The cores are coated with epoxy. The colour is cream (Sendust), grey (MPP) or khaki (High-Flux).
Maximum operating temperature is 200 °C.
Parylene coating is also available (transparent, maximum operating temperature 130 °C).

Isolation voltage

AC isolation voltage : 1000 V (Parylene : 750 V).
Contacts are applied on the edge of the ring core, which is also the critical point for the winding operation.

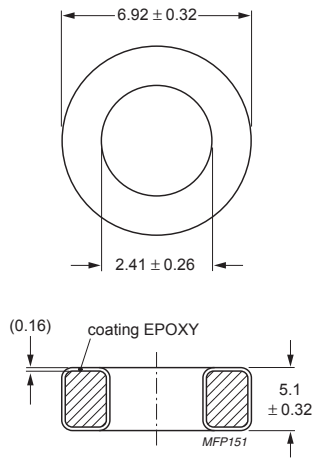

Dimensions in mm.

Fig.1 TX6.6/2.7/4.8 ring core.

GRADE	A_L (nH)	μ_i	B (mT) at H = 100 kA/m; f = 10 kHz; T = 25 °C	CORE LOSS (W) at f = 100 kHz; $\hat{B}$ = 100 mT; T = 25 °C	TYPE NUMBER
MPP	14 ± 8 %	14	≥ 640	0.188	TX6.6/4.8-M2-A14
	21 ± 8 %	26	≥ 700	0.150	TX6.6/4.8-M2-A21
	50 ± 8 %	60	≥ 760	0.094	TX6.6/4.8-M2-A50
	103 ± 8 %	125	≥ 800	0.094	TX6.6/4.8-M2-A103
	122 ± 8 %	147	≥ 800	0.100	TX6.6/4.8-M2-A122
	132 ± 8 %	160	≥ 800	0.100	TX6.6/4.8-M2-A132
	144 ± 8 %	173	≥ 800	0.100	TX6.6/4.8-M2-A144
	165 ± 8 %	200	≥ 800	0.188	TX6.6/4.8-M2-A165
	247 ± 8 %	300	≥ 800	0.188	TX6.6/4.8-M2-A247
Sendust	50 ± 12 %	60	≥ 1030	0.107	TX6.6/4.8-S7-A50
	62 ± 12 %	75	≥ 1040	0.107	TX6.6/4.8-S7-A62
	74 ± 12 %	90	≥ 1050	0.107	TX6.6/4.8-S7-A74
	103 ± 12 %	125	≥ 1060	0.107	TX6.6/4.8-S7-A103
High-Flux	12 ± 8 %	14	≥ 890	0.314	TX6.6/4.8-H2-A12
	21 ± 8 %	26	≥ 980	0.251	TX6.6/4.8-H2-A21
	50 ± 8 %	60	≥ 1280	0.226	TX6.6/4.8-H2-A50
	103 ± 8 %	125	≥ 1370	0.251	TX6.6/4.8-H2-A103
	122 ± 8 %	147	≥ 1385	0.276	TX6.6/4.8-H2-A122
	132 ± 8 %	160	≥ 1400	0.439	TX6.6/4.8-H2-A132

RING CORES (TOROIDS)

Effective core parameters

SYMBOL	PARAMETER		VALUE	UNIT
Σ(l/A)	core factor (C1)		2.28	mm^{-1}
V_e	effective volume		120	mm^3
l_e	effective length		16.5	mm
A_e	effective area		7.25	mm^2
m	mass of core (for μ_i 125)	MPP	1.00	g
		Sendust	0.74	g
		High-Flux	0.94	g

Coating

The cores are coated with epoxy. The colour is cream (Sendust), grey (MPP) or khaki (High-Flux). Maximum operating temperature is 200 °C. Parylene coating is also available (transparent, maximum operating temperature 130 °C).

Isolation voltage

AC isolation voltage : 1000 V (Parylene : 750 V). Contacts are applied on the edge of the ring core, which is also the critical point for the winding operation.

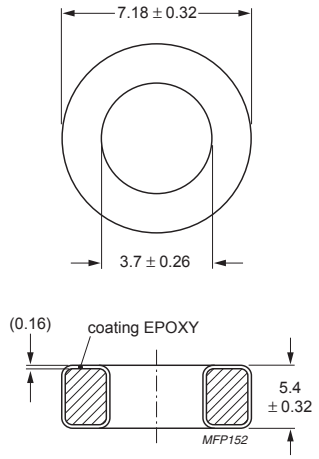

Dimensions in mm.

Fig.1 TX6.9/4/5.1 ring core.

GRADE	A_L (nH)	μ_i	B (mT) at H = 100 kA/m; f = 10 kHz; T = 25 °C	CORE LOSS (W) at f = 100 kHz; $\hat{B}$ = 100 mT; T = 25 °C	TYPE NUMBER
MPP	8 ± 8 %	14	≥ 640	0.179	TX6.9/5.1-M2-A8
	14 ± 8 %	26	≥ 700	0.144	TX6.9/5.1-M2-A14
	33 ± 8 %	60	≥ 760	0.090	TX6.9/5.1-M2-A33
	70 ± 8 %	125	≥ 800	0.090	TX6.9/5.1-M2-A70
	81 ± 8 %	147	≥ 800	0.096	TX6.9/5.1-M2-A81
	89 ± 8 %	160	≥ 800	0.096	TX6.9/5.1-M2-A89
	95 ± 8 %	173	≥ 800	0.096	TX6.9/5.1-M2-A95
	112 ± 8 %	200	≥ 800	0.179	TX6.9/5.1-M2-A112
	166 ± 8 %	300	≥ 800	0.179	TX6.9/5.1-M2-A166
Sendust	33 ± 12 %	60	≥ 1030	0.102	TX6.9/5.1-S7-A33
	42 ± 12 %	75	≥ 1040	0.102	TX6.9/5.1-S7-A42
	50 ± 12 %	90	≥ 1050	0.102	TX6.9/5.1-S7-A50
	70 ± 12 %	125	≥ 1060	0.102	TX6.9/5.1-S7-A70
High-Flux	8 ± 8 %	14	≥ 890	0.299	TX6.9/5.1-H2-A8
	14 ± 8 %	26	≥ 980	0.239	TX6.9/5.1-H2-A14
	33 ± 8 %	60	≥ 1280	0.215	TX6.9/5.1-H2-A33
	70 ± 8 %	125	≥ 1370	0.239	TX6.9/5.1-H2-A70
	81 ± 8 %	147	≥ 1385	0.263	TX6.9/5.1-H2-A81
	89 ± 8 %	160	≥ 1400	0.419	TX6.9/5.1-H2-A89

RING CORES (TOROIDS)

Effective core parameters

SYMBOL	PARAMETER		VALUE	UNIT
$\Sigma(l/A)$	core factor (C1)		2.91	mm^{-1}
V_e	effective volume		110	mm^3
l_e	effective length		17.9	mm
A_e	effective area		6.15	mm^2
m	mass of core (for μ_i 125)	MPP	0.92	g
		Sendust	0.68	g
		High-Flux	0.87	g

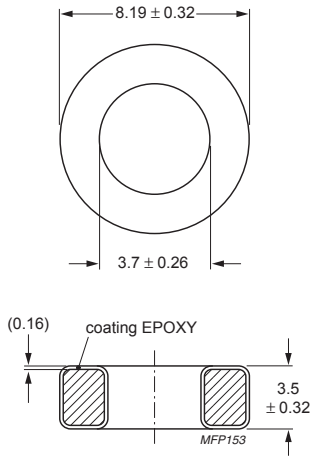

Dimensions in mm.

Fig.1 TX7.9/4/3.2 ring core.

Coating

The cores are coated with epoxy. The colour is black (Sendust), grey (MPP) or khaki (High-Flux). Maximum operating temperature is 200 °C. Parylene coating is also available (transparent, maximum operating temperature 130 °C).

Isolation voltage

AC isolation voltage : 1000 V (Parylene : 750 V). Contacts are applied on the edge of the ring core, which is also the critical point for the winding operation.

Ring core data - Note 1. Mechanical dimensions : OD ≤ 8.51, ID ≥ 3.43, H ≤ 3.81

GRADE	A_L (nH)	μ_i	B (mT) at H = 100 kA/m; f = 10 kHz; T = 25 °C	CORE LOSS (W) at f = 100 kHz; $\hat{B}$ = 100 mT; T = 25 °C	TYPE NUMBER
MPP	6 ± 8 %	14	≥ 640	0.165	TX7.9/3.2-M2-A6
	11 ± 8 %	26	≥ 700	0.132	TX7.9/3.2-M2-A11
	25 ± 8 %	60	≥ 760	0.082	TX7.9/3.2-M2-A25
	52 ± 8 %	125	≥ 800	0.082	TX7.9/3.2-M2-A52
	62 ± 8 %	147	≥ 800	0.088	TX7.9/3.2-M2-A62
	66 ± 8 %	160	≥ 800	0.088	TX7.9/3.2-M2-A66
	73 ± 8 %	173	≥ 800	0.088	TX7.9/3.2-M2-A73
	83 ± 8 %	200	≥ 800	0.165	TX7.9/3.2-M2-A83
	124 ± 8 %	300	≥ 800	0.165	TX7.9/3.2-M2-A124
Sendust (1)	25 ± 12 %	60	≥ 1030	0.094	TX7.9/3.2-S7-A25-MC
	31 ± 12 %	75	≥ 1040	0.094	TX7.9/3.2-S7-A31-MC
	37 ± 12 %	90	≥ 1050	0.094	TX7.9/3.2-S7-A37-MC
	52 ± 12 %	125	≥ 1060	0.094	TX7.9/3.2-S7-A52-MC
High-Flux	6 ± 8 %	14	≥ 890	0.275	TX7.9/3.2-H2-A6
	11 ± 8 %	26	≥ 980	0.220	TX7.9/3.2-H2-A11
	25 ± 8 %	60	≥ 1280	0.198	TX7.9/3.2-H2-A25
	52 ± 8 %	125	≥ 1370	0.220	TX7.9/3.2-H2-A52
	62 ± 8 %	147	≥ 1385	0.242	TX7.9/3.2-H2-A62
	66 ± 8 %	160	≥ 1400	0.385	TX7.9/3.2-H2-A66

RING CORES (TOROIDS)

Effective core parameters

SYMBOL	PARAMETER		VALUE	UNIT
$\Sigma(l/A)$	core factor (C1)		2.90	mm^{-1}
V_e	effective volume		164	mm^3
l_e	effective length		21.8	mm
A_e	effective area		7.52	mm^2
m	mass of core (for μ_i 125)	MPP	1.40	g
		Sendust	1.01	g
		High-Flux	1.30	g

Coating

The cores are coated with epoxy. The colour is black (Sendust), grey (MPP) or khaki (High-Flux). Maximum operating temperature is 200 °C. Parylene coating is also available (transparent, maximum operating temperature 130 °C).

Isolation voltage

AC isolation voltage : 1000 V (Parylene : 750 V). Contacts are applied on the edge of the ring core, which is also the critical point for the winding operation.

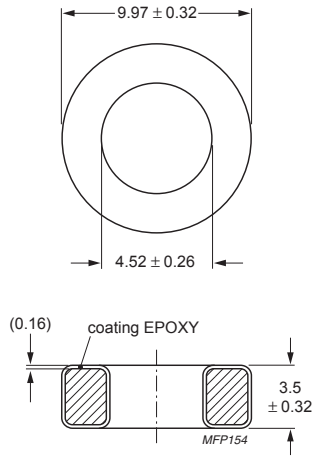

Dimensions in mm.

Fig.1 TX9.7/4.8/3.2 ring core.

Ring core data - Note 1. Mechanical dimensions : OD ≤ 10.29, ID ≥ 4.27, H ≤ 3.81

GRADE	A_L (nH)	μ_i	B (mT) at H = 100 kA/m; f = 10 kHz; T = 25 °C	CORE LOSS (W) at f = 100 kHz; $\hat{B}$ = 100 mT; T = 25 °C	TYPE NUMBER
MPP	6 ± 8 %	14	≥ 640	0.246	TX9.7/3.2-M2-A6
	11 ± 8 %	26	≥ 700	0.197	TX9.7/3.2-M2-A11
	25 ± 8 %	60	≥ 760	0.123	TX9.7/3.2-M2-A25
	53 ± 8 %	125	≥ 800	0.123	TX9.7/3.2-M2-A53
	63 ± 8 %	147	≥ 800	0.131	TX9.7/3.2-M2-A63
	68 ± 8 %	160	≥ 800	0.131	TX9.7/3.2-M2-A68
	74 ± 8 %	173	≥ 800	0.131	TX9.7/3.2-M2-A74
	84 ± 8 %	200	≥ 800	0.246	TX9.7/3.2-M2-A84
	128 ± 8 %	300	≥ 800	0.246	TX9.7/3.2-M2-A128
Sendust (1)	25 ± 12 %	60	≥ 1030	0.140	TX9.7/3.2-S7-A25-MC
	32 ± 12 %	75	≥ 1040	0.140	TX9.7/3.2-S7-A32-MC
	38 ± 12 %	90	≥ 1050	0.140	TX9.7/3.2-S7-A38-MC
	53 ± 12 %	125	≥ 1060	0.140	TX9.7/3.2-S7-A53-MC
High-Flux	6 ± 8 %	14	≥ 890	0.410	TX9.7/3.2-H2-A6
	11 ± 8 %	26	≥ 980	0.328	TX9.7/3.2-H2-A11
	25 ± 8 %	60	≥ 1280	0.295	TX9.7/3.2-H2-A25
	53 ± 8 %	125	≥ 1370	0.328	TX9.7/3.2-H2-A53
	63 ± 8 %	147	≥ 1385	0.361	TX9.7/3.2-H2-A63
	68 ± 8 %	160	≥ 1400	0.574	TX9.7/3.2-H2-A68

RING CORES (TOROIDS)

Effective core parameters

SYMBOL	PARAMETER		VALUE	UNIT
$\Sigma(l/A)$	core factor (C1)		2.31	mm^{-1}
V_e	effective volume		206	mm^3
l_e	effective length		21.8	mm
A_e	effective area		9.45	mm^2
m	mass of core (for μ_i 125)	MPP	1.80	g
		Sendust	1.44	g
		High-Flux	1.70	g

Coating

The cores are coated with epoxy. The colour is cream (Sendust), grey (MPP) or khaki (High-Flux). Maximum operating temperature is 200 °C. Parylene coating is also available (transparent, maximum operating temperature 130 °C).

Isolation voltage

AC isolation voltage : 1000 V (Parylene : 750 V). Contacts are applied on the edge of the ring core, which is also the critical point for the winding operation.

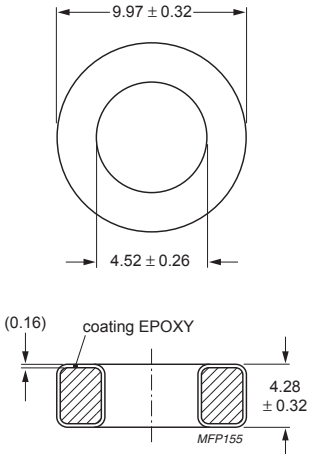

Dimensions in mm.

Fig.1 TX9.7/4.8/4 ring core.

GRADE	A_L (nH)	μ_i	B (mT) at H = 100 kA/m; f = 10 kHz; T = 25 °C	CORE LOSS (W) at f = 100 kHz; $\hat{B}$ = 100 mT;T = 25 °C	TYPE NUMBER
MPP	7 ± 8 %	14	≥ 640	0.309	TX9.7/4-M2-A7
	14 ± 8 %	26	≥ 700	0.247	TX9.7/4-M2-A14
	32 ± 8 %	60	≥ 760	0.155	TX9.7/4-M2-A32
	66 ± 8 %	125	≥ 800	0.155	TX9.7/4-M2-A66
	78 ± 8 %	147	≥ 800	0.165	TX9.7/4-M2-A78
	84 ± 8 %	160	≥ 800	0.165	TX9.7/4-M2-A84
	92 ± 8 %	173	≥ 800	0.165	TX9.7/4-M2-A92
	105 ± 8 %	200	≥ 800	0.309	TX9.7/4-M2-A105
	159 ± 8 %	300	≥ 800	0.309	TX9.7/4-M2-A159
Sendust	32 ± 12 %	60	≥ 1030	0.176	TX9.7/4-S7-A32
	40 ± 12 %	75	≥ 1040	0.176	TX9.7/4-S7-A40
	48 ± 12 %	90	≥ 1050	0.176	TX9.7/4-S7-A48
	66 ± 12 %	125	≥ 1060	0.176	TX9.7/4-S7-A66
High-Flux	7 ± 8 %	14	≥ 890	0.515	TX9.7/4-H2-A7
	14 ± 8 %	26	≥ 980	0.412	TX9.7/4-H2-A14
	32 ± 8 %	60	≥ 1280	0.371	TX9.7/4-H2-A32
	66 ± 8 %	125	≥ 1370	0.412	TX9.7/4-H2-A66
	78 ± 8 %	147	≥ 1385	0.451	TX9.7/4-H2-A78
	84 ± 8 %	160	≥ 1400	0.721	TX9.7/4-H2-A84

RING CORES (TOROIDS)

Effective core parameters

SYMBOL	PARAMETER		VALUE	UNIT
$\Sigma(l/A)$	core factor (C1)		2.38	mm^{-1}
V_e	effective volume		238	mm^3
l_e	effective length		23.8	mm
A_e	effective area		10.0	mm^2
m	mass of core (for μ_i 125)	MPP	1.91	g
		Sendust	1.46	g
		High-Flux	1.80	g

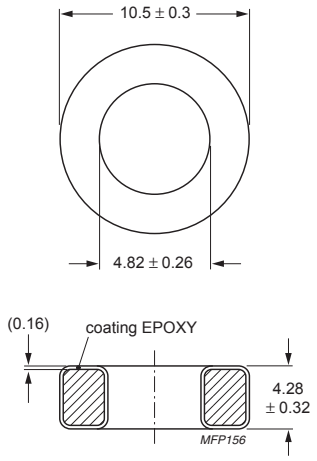

Dimensions in mm.

Fig.1 TX10/5.1/4 ring core.

Coating

The cores are coated with epoxy. The colour is black (Sendust), grey (MPP) or khaki (High-Flux). Maximum operating temperature is 200 °C. Parylene coating is also available (transparent, maximum operating temperature 130 °C).

Isolation voltage

AC isolation voltage : 1000 V (Parylene : 750 V). Contacts are applied on the edge of the ring core, which is also the critical point for the winding operation.

Ring core data - Note 1. Mechanical dimensions : OD ≤ 10.8, ID ≥ 4.57, H ≤ 4.6

GRADE	A_L (nH)	μ_i	B (mT) at H = 100 kA/m; f = 10 kHz; T = 25 °C	CORE LOSS (W) at f = 100 kHz; $\hat{B}$ = 100 mT; T = 25 °C	TYPE NUMBER
MPP	7 ± 8 %	14	≥ 640	0.357	TX10/4-M2-A7
	14 ± 8 %	26	≥ 700	0.286	TX10/4-M2-A14
	32 ± 8 %	60	≥ 760	0.179	TX10/4-M2-A32
	66 ± 8 %	125	≥ 800	0.179	TX10/4-M2-A66
	78 ± 8 %	147	≥ 800	0.190	TX10/4-M2-A78
	84 ± 8 %	160	≥ 800	0.190	TX10/4-M2-A84
	92 ± 8 %	173	≥ 800	0.190	TX10/4-M2-A92
	105 ± 8 %	200	≥ 800	0.357	TX10/4-M2-A105
	159 ± 8 %	300	≥ 800	0.357	TX10/4-M2-A159
Sendust (1)	32 ± 12 %	60	≥ 1030	0.203	TX10/4-S7-A32-MC
	40 ± 12 %	75	≥ 1040	0.203	TX10/4-S7-A40-MC
	48 ± 12 %	90	≥ 1050	0.203	TX10/4-S7-A48-MC
	66 ± 12 %	125	≥ 1060	0.203	TX10/4-S7-A66-MC
High-Flux	7 ± 8 %	14	≥ 890	0.595	TX10/4-H2-A7
	14 ± 8 %	26	≥ 980	0.476	TX10/4-H2-A14
	32 ± 8 %	60	≥ 1280	0.428	TX10/4-H2-A32
	66 ± 8 %	125	≥ 1370	0.476	TX10/4-H2-A66
	78 ± 8 %	147	≥ 1385	0.524	TX10/4-H2-A78
	84 ± 8 %	160	≥ 1400	0.833	TX10/4-H2-A84

RING CORES (TOROIDS)

Effective core parameters

SYMBOL	PARAMETER		VALUE	UNIT
$\Sigma(l/A)$	core factor (C1)		2.97	mm^{-1}
V_e	effective volume		244	mm^3
l_e	effective length		26.9	mm
A_e	effective area		9.06	mm^2
m	mass of core (for μ_i 125)	MPP	2.12	g
		Sendust	1.50	g
		High-Flux	1.99	g

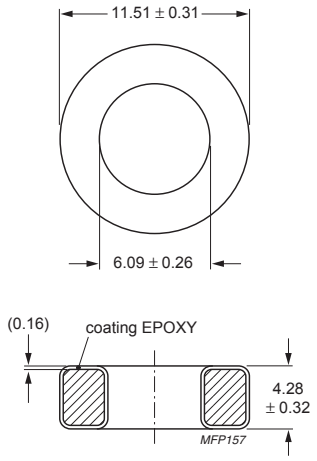

Dimensions in mm.

Fig.1 TX11/6.4/4 ring core.

Coating

The cores are coated with epoxy. The colour is black (Sendust), grey (MPP) or khaki (High-Flux). Maximum operating temperature is 200 °C. Parylene coating is also available (transparent, maximum operating temperature 130 °C).

Isolation voltage

AC isolation voltage : 1000 V (Parylene : 750 V). Contacts are applied on the edge of the ring core, which is also the critical point for the winding operation.

Ring core data - Note 1. Mechanical dimensions : OD ≤ 11.89, ID ≥ 5.89, H ≤ 4.72

GRADE	A_L (nH)	μ_i	B (mT) at H = 100 kA/m; f = 10 kHz; T = 25 °C	CORE LOSS (W) at f = 100 kHz; $\hat{B}$ = 100 mT; T = 25 °C	TYPE NUMBER
MPP	6 ± 8 %	14	≥ 640	0.366	TX11/4-M2-A6
	11 ± 8 %	26	≥ 700	0.292	TX11/4-M2-A11
	26 ± 8 %	60	≥ 760	0.183	TX11/4-M2-A26
	53 ± 8 %	125	≥ 800	0.183	TX11/4-M2-A53
	63 ± 8 %	147	≥ 800	0.195	TX11/4-M2-A63
	68 ± 8 %	160	≥ 800	0.195	TX11/4-M2-A68
	74 ± 8 %	173	≥ 800	0.195	TX11/4-M2-A74
	85 ± 8 %	200	≥ 800	0.366	TX11/4-M2-A85
	127 ± 8 %	300	≥ 800	0.366	TX11/4-M2-A127
Sendust (1)	26 ± 12 %	60	≥ 1030	0.208	TX11/4-S7-A26-MC
	32 ± 12 %	75	≥ 1040	0.208	TX11/4-S7-A32-MC
	38 ± 12 %	90	≥ 1050	0.208	TX11/4-S7-A38-MC
	53 ± 12 %	125	≥ 1060	0.208	TX11/4-S7-A53-MC
High-Flux	6 ± 8 %	14	≥ 890	0.609	TX11/4-H2-A6
	11 ± 8 %	26	≥ 980	0.487	TX11/4-H2-A11
	26 ± 8 %	60	≥ 1280	0.439	TX11/4-H2-A26
	53 ± 8 %	125	≥ 1370	0.487	TX11/4-H2-A53
	63 ± 8 %	147	≥ 1385	0.536	TX11/4-H2-A63
	68 ± 8 %	160	≥ 1400	0.853	TX11/4-H2-A68

RING CORES (TOROIDS)

Effective core parameters

SYMBOL	PARAMETER		VALUE	UNIT
$\Sigma(l/A)$	core factor (C1)		2.74	mm^{-1}
V_e	effective volume		356	mm^3
l_e	effective length		31.2	mm
A_e	effective area		11.4	mm^2
m	mass of core (for μ_i 125)	MPP	3.07	g
		Sendust	2.20	g
		High-Flux	2.90	g

Coating

The cores are coated with epoxy. The colour is black (Sendust), grey (MPP) or khaki (High-Flux). Maximum operating temperature is 200 °C. Parylene coating is also available (transparent, maximum operating temperature 130 °C).

Isolation voltage

AC isolation voltage : 1000 V (Parylene : 750 V). Contacts are applied on the edge of the ring core, which is also the critical point for the winding operation.

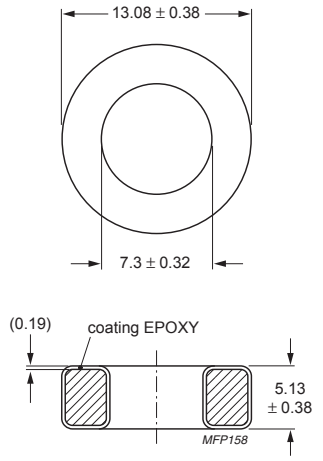

Dimensions in mm.

Fig.1 TX13/7.6/4.8 ring core.

Ring core data - Note 1. Mechanical dimensions : OD ≤ 13.46, ID ≥ 6.99, H ≤ 5.51

GRADE	A_L (nH)	μ_i	B (mT) at H = 100 kA/m; f = 10 kHz; T = 25 °C	CORE LOSS (W) at f = 100 kHz; $\hat{B}$ = 100 mT; T = 25 °C	TYPE NUMBER
MPP	6.4 ± 8 %	14	≥ 640	0.534	TX13/4.8-M2-A6.4
	12 ± 8 %	26	≥ 700	0.427	TX13/4.8-M2-A12
	27 ± 8 %	60	≥ 760	0.267	TX13/4.8-M2-A27
	56 ± 8 %	125	≥ 800	0.267	TX13/4.8-M2-A56
	67 ± 8 %	147	≥ 800	0.285	TX13/4.8-M2-A67
	72 ± 8 %	160	≥ 800	0.285	TX13/4.8-M2-A72
	79 ± 8 %	173	≥ 800	0.285	TX13/4.8-M2-A79
	90 ± 8 %	200	≥ 800	0.534	TX13/4.8-M2-A90
	134 ± 8 %	300	≥ 800	0.534	TX13/4.8-M2-A134
Sendust (1)	27 ± 8 %	60	≥ 1030	0.304	TX13/4.8-S7-A27-MC
	34 ± 8 %	75	≥ 1040	0.304	TX13/4.8-S7-A34-MC
	40 ± 8 %	90	≥ 1050	0.304	TX13/4.8-S7-A40-MC
	56 ± 8 %	125	≥ 1060	0.304	TX13/4.8-S7-A56-MC
High-Flux	6.4 ± 8 %	14	≥ 890	0.890	TX13/4.8-H2-A6.4
	12 ± 8 %	26	≥ 980	0.712	TX13/4.8-H2-A12
	27 ± 8 %	60	≥ 1280	0.641	TX13/4.8-H2-A27
	56 ± 8 %	125	≥ 1370	0.712	TX13/4.8-H2-A56
	67 ± 8 %	147	≥ 1385	0.783	TX13/4.8-H2-A67
	72 ± 8 %	160	≥ 1400	1.25	TX13/4.8-H2-A72

RING CORES (TOROIDS)

Effective core parameters

SYMBOL	PARAMETER		VALUE	UNIT
Σ(l/A)	core factor (C1)		2.14	mm^{-1}
V_e	effective volume		789	mm^3
l_e	effective length		41.1	mm
A_e	effective area		19.2	mm^2
m	mass of core (for μ_i 125)	MPP	6.78	g
		Sendust	4.98	g
		High-Flux	6.34	g

Coating

The cores are coated with epoxy. The colour is black (Sendust), grey (MPP) or khaki (High-Flux).
Maximum operating temperature is 200 °C.

Isolation voltage

AC isolation voltage : 1000 V.
Contacts are applied on the edge of the ring core, which is also the critical point for the winding operation.

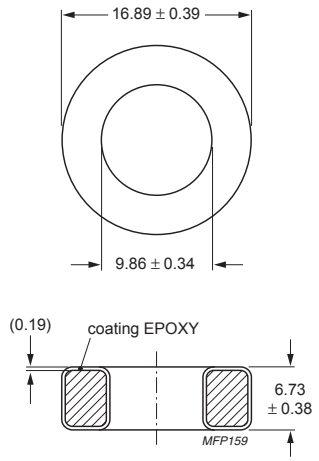

Dimensions in mm.

Fig.1 TX16/10/6.4 ring core.

Ring core data - Note 1. Mechanical dimensions : OD ≤ 17.4, ID ≥ 9.53, H ≤ 7.11

GRADE	A_L (nH)	μ_i	B (mT) at H = 100 kA/m; f = 10 kHz; T = 25 °C	CORE LOSS (W) at f = 100 kHz; $\hat{B}$ = 100 mT; T = 25 °C	TYPE NUMBER
MPP	8 ± 8 %	14	≥ 640	1.18	TX16/6.4-M2-A8
	15 ± 8 %	26	≥ 700	0.947	TX16/6.4-M2-A15
	35 ± 8 %	60	≥ 760	0.592	TX16/6.4-M2-A35
	72 ± 8 %	125	≥ 800	0.592	TX16/6.4-M2-A72
	88 ± 8 %	147	≥ 800	0.631	TX16/6.4-M2-A88
	92 ± 8 %	160	≥ 800	0.631	TX16/6.4-M2-A92
	104 ± 8 %	173	≥ 800	0.631	TX16/6.4-M2-A104
	115 ± 8 %	200	≥ 800	1.18	TX16/6.4-M2-A115
	173 ± 8 %	300	≥ 800	1.18	TX16/6.4-M2-A173
Sendust (1)	35 ± 8 %	60	≥ 1030	0.675	TX16/6.4-S7-A35-MC
	43 ± 8 %	75	≥ 1040	0.675	TX16/6.4-S7-A43-MC
	52 ± 8 %	90	≥ 1050	0.675	TX16/6.4-S7-A52-MC
	72 ± 8 %	125	≥ 1060	0.675	TX16/6.4-S7-A72-MC
High-Flux	8 ± 8 %	14	≥ 890	1.97	TX16/6.4-H2-A8
	15 ± 8 %	26	≥ 980	1.58	TX16/6.4-H2-A15
	35 ± 8 %	60	≥ 1280	1.42	TX16/6.4-H2-A35
	72 ± 8 %	125	≥ 1370	1.58	TX16/6.4-H2-A72
	88 ± 8 %	147	≥ 1385	1.74	TX16/6.4-H2-A88
	92 ± 8 %	160	≥ 1400	2.76	TX16/6.4-H2-A92

RING CORES (TOROIDS)

Effective core parameters

SYMBOL	PARAMETER		VALUE	UNIT
$\Sigma(l/A)$	core factor (C1)		1.78	mm^{-1}
V_e	effective volume		960	mm^3
l_e	effective length		41.4	mm
A_e	effective area		23.2	mm^2
m	mass of core (for μ_i 125)	MPP	8.16	g
		Sendust	5.90	g
		High-Flux	7.70	g

Coating

The cores are coated with epoxy. The colour is cream (Sendust), grey (MPP) or khaki (High-Flux).
Maximum operating temperature is 200 °C.

Isolation voltage

AC isolation voltage : 1000 V.
Contacts are applied on the edge of the ring core, which is also the critical point for the winding operation.

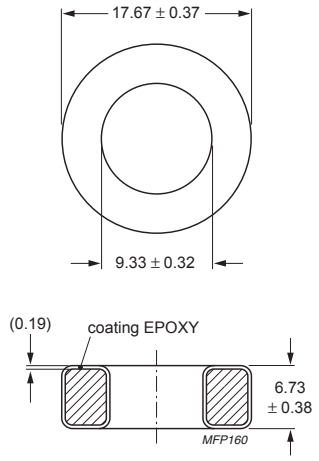

Dimensions in mm.

Fig.1 TX17/9.7/6.4 ring core.

Ring core data

GRADE	A_L (nH)	μ_i	B (mT) at H = 100 kA/m; f = 10 kHz; T = 25 °C	CORE LOSS (W) at f = 100 kHz; $\hat{B}$ = 100 mT; T = 25 °C	TYPE NUMBER
MPP	10 ± 8 %	14	≥ 640	1.44	TX17/6.4-M2-A10
	19 ± 8 %	26	≥ 700	1.15	TX17/6.4-M2-A19
	43 ± 8 %	60	≥ 760	0.720	TX17/6.4-M2-A43
	89 ± 8 %	125	≥ 800	0.720	TX17/6.4-M2-A89
	105 ± 8 %	147	≥ 800	0.768	TX17/6.4-M2-A105
	114 ± 8 %	160	≥ 800	0.768	TX17/6.4-M2-A114
	123 ± 8 %	173	≥ 800	0.768	TX17/6.4-M2-A123
	142 ± 8 %	200	≥ 800	1.44	TX17/6.4-M2-A142
	214 ± 8 %	300	≥ 800	1.44	TX17/6.4-M2-A214
Sendust	43 ± 8 %	60	≥ 1030	0.821	TX17/6.4-S7-A43
	53 ± 8 %	75	≥ 1040	0.821	TX17/6.4-S7-A53
	64 ± 8 %	90	≥ 1050	0.821	TX17/6.4-S7-A64
	89 ± 8 %	125	≥ 1060	0.821	TX17/6.4-S7-A89
High-Flux	10 ± 8 %	14	≥ 890	2.40	TX17/6.4-H2-A10
	19 ± 8 %	26	≥ 980	1.92	TX17/6.4-H2-A19
	43 ± 8 %	60	≥ 1280	1.73	TX17/6.4-H2-A43
	89 ± 8 %	125	≥ 1370	1.92	TX17/6.4-H2-A89
	105 ± 8 %	147	≥ 1385	2.11	TX17/6.4-H2-A105
	114 ± 8 %	160	≥ 1400	3.36	TX17/6.4-H2-A114

RING CORES (TOROIDS)

Effective core parameters

SYMBOL	PARAMETER		VALUE	UNIT
$\Sigma(l/A)$	core factor (C1)		2.25	mm^{-1}
V_e	effective volume		1150	mm^3
l_e	effective length		50.9	mm
A_e	effective area		22.6	mm^2
m	mass of core (for μ_i 125)	MPP	9.40	g
		Sendust	7.10	g
		High-Flux	8.90	g

Coating

The cores are coated with epoxy. The colour is black (Sendust), grey (MPP) or khaki (High-Flux).
Maximum operating temperature is 200 °C.

Isolation voltage

AC isolation voltage : 1000 V.
Contacts are applied on the edge of the ring core, which is also the critical point for the winding operation.

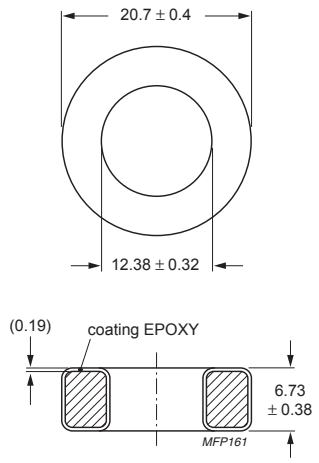

Dimensions in mm.

Fig.1 TX20/13/6.4 ring core.

Ring core data - Note 1. Mechanical dimensions : OD ≤ 21.1, ID ≥ 12.07, H ≤ 7.11

GRADE	A_L (nH)	μ_i	B (mT) at H = 100 kA/m; f = 10 kHz; T = 25 °C	CORE LOSS (W) at f = 100 kHz; $\hat{B}$ = 100 mT; T = 25 °C	TYPE NUMBER
MPP	7.8 ± 8 %	14	≥ 640	1.73	TX20/6.4-M2-A7.8
	14 ± 8 %	26	≥ 700	1.38	TX20/6.4-M2-A14
	32 ± 8 %	60	≥ 760	0.863	TX20/6.4-M2-A32
	68 ± 8 %	125	≥ 800	0.863	TX20/6.4-M2-A68
	81 ± 8 %	147	≥ 800	0.920	TX20/6.4-M2-A81
	87 ± 8 %	160	≥ 800	0.920	TX20/6.4-M2-A87
	109 ± 8 %	200	≥ 800	1.73	TX20/6.4-M2-A109
	163 ± 8 %	300	≥ 800	1.73	TX20/6.4-M2-A163
Sendust (1)	32 ± 8 %	60	≥ 1030	0.983	TX20/6.4-S7-A32-MC
	41 ± 8 %	75	≥ 1040	0.983	TX20/6.4-S7-A41-MC
	49 ± 8 %	90	≥ 1050	0.983	TX20/6.4-S7-A49-MC
	68 ± 8 %	125	≥ 1060	0.983	TX20/6.4-S7-A68-MC
High-Flux	7.8 ± 8 %	14	≥ 890	2.88	TX20/6.4-H2-A7.8
	14 ± 8 %	26	≥ 980	2.30	TX20/6.4-H2-A14
	32 ± 8 %	60	≥ 1280	2.07	TX20/6.4-H2-A32
	68 ± 8 %	125	≥ 1370	2.30	TX20/6.4-H2-A68
	81 ± 8 %	147	≥ 1385	2.53	TX20/6.4-H2-A81
	87 ± 8 %	160	≥ 1400	4.03	TX20/6.4-H2-A87

RING CORES (TOROIDS)

Effective core parameters

SYMBOL	PARAMETER		VALUE	UNIT
$\Sigma(l/A)$	core factor (C1)		1.71	mm^{-1}
V_e	effective volume		1880	mm^3
l_e	effective length		56.7	mm
A_e	effective area		33.1	mm^2
m	mass of core (for μ_i 125)	MPP	15.9	g
		Sendust	11.5	g
		High-Flux	15.0	g

Coating

The cores are coated with epoxy. The colour is black (Sendust), grey (MPP) or khaki (High-Flux).
Maximum operating temperature is 200 °C.

Isolation voltage

AC isolation voltage : 1000 V.
Contacts are applied on the edge of the ring core, which is also the critical point for the winding operation.

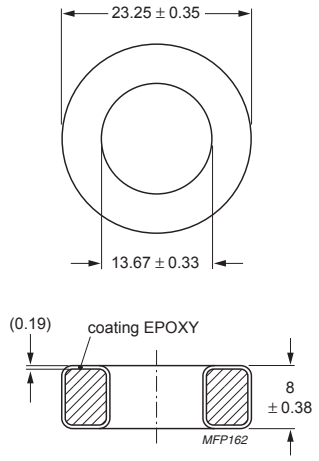

Dimensions in mm.

Fig.1 TX23/14/7.6 ring core.

Ring core data - Note 1. Mechanical dimensions : OD ≤ 23.62, ID ≥ 13.39, H ≤ 8.38

GRADE	A_L (nH)	μ_i	B (mT) at H = 100 kA/m; f = 10 kHz; T = 25 °C	CORE LOSS (W) at f = 100 kHz; $\hat{B}$ = 100 mT; T = 25 °C	TYPE NUMBER
MPP	9.9 ± 8 %	14	≥ 640	2.82	TX23/7.6-M2-A9.9
	19 ± 8 %	26	≥ 700	2.26	TX23/7.6-M2-A19
	43 ± 8 %	60	≥ 760	1.41	TX23/7.6-M2-A43
	90 ± 8 %	125	≥ 800	1.41	TX23/7.6-M2-A90
	106 ± 8 %	147	≥ 800	1.50	TX23/7.6-M2-A106
	115 ± 8 %	160	≥ 800	1.50	TX23/7.6-M2-A115
	124 ± 8 %	173	≥ 800	1.50	TX23/7.6-M2-A124
	144 ± 8 %	200	≥ 800	2.82	TX23/7.6-M2-A144
	216 ± 8 %	300	≥ 800	2.82	TX23/7.6-M2-A216
Sendust (1)	19 ± 8 %	26	≥ 1000	3.01	TX23/7.6-S7-A19-MC
	43 ± 8 %	60	≥ 1030	1.61	TX23/7.6-S7-A43-MC
	54 ± 8 %	75	≥ 1040	1.61	TX23/7.6-S7-A54-MC
	65 ± 8 %	90	≥ 1050	1.61	TX23/7.6-S7-A65-MC
	90 ± 8 %	125	≥ 1060	1.61	TX23/7.6-S7-A90-MC
High-Flux	9.9 ± 8 %	14	≥ 890	4.70	TX23/7.6-H2-A9.9
	19 ± 8 %	26	≥ 980	3.76	TX23/7.6-H2-A19
	43 ± 8 %	60	≥ 1280	3.38	TX23/7.6-H2-A43
	90 ± 8 %	125	≥ 1370	3.76	TX23/7.6-H2-A90
	106 ± 8 %	147	≥ 1385	4.14	TX23/7.6-H2-A106
	115 ± 8 %	160	≥ 1400	6.58	TX23/7.6-H2-A115

RING CORES (TOROIDS)

Effective core parameters

SYMBOL	PARAMETER		VALUE	UNIT
$\Sigma(l/A)$	core factor (C1)		1.52	mm^{-1}
V_e	effective volume		2280	mm^3
l_e	effective length		58.8	mm
A_e	effective area		38.8	mm^2
m	mass of core (for μ_i 125)	MPP	19.9	g
		Sendust	14.0	g
		High-Flux	18.8	g

Coating

The cores are coated with epoxy. The colour is cream (Sendust), grey (MPP) or khaki (High-Flux).
Maximum operating temperature is 200 °C.

Isolation voltage

AC isolation voltage : 1000 V.
Contacts are applied on the edge of the ring core, which is also the critical point for the winding operation.

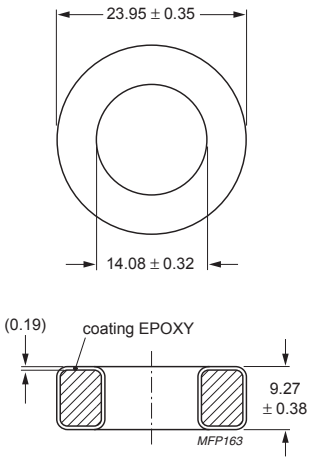

Dimensions in mm.

Fig.1 TX24/14/8.9 ring core.

Ring core data

GRADE	A_L (nH)	μ_i	B (mT) at H = 100 kA/m; f = 10 kHz; T = 25 °C	CORE LOSS (W) at f = 100 kHz; $\hat{B}$ = 100 mT; T = 25 °C	TYPE NUMBER
MPP	12 ± 8 %	14	≥ 640	3.42	TX24/8.9-M2-A12
	22 ± 8 %	26	≥ 700	2.74	TX24/8.9-M2-A22
	51 ± 8 %	60	≥ 760	1.71	TX24/8.9-M2-A51
	105 ± 8 %	125	≥ 800	1.71	TX24/8.9-M2-A105
	124 ± 8 %	147	≥ 800	1.82	TX24/8.9-M2-A124
	135 ± 8 %	160	≥ 800	1.82	TX24/8.9-M2-A135
	146 ± 8 %	173	≥ 800	1.82	TX24/8.9-M2-A146
	169 ± 8 %	200	≥ 800	3.42	TX24/8.9-M2-A169
	253 ± 8 %	300	≥ 800	3.42	TX24/8.9-M2-A253
Sendust	22 ± 8 %	26	≥ 1000	3.65	TX24/8.9-S7-A22
	51 ± 8 %	60	≥ 1030	1.95	TX24/8.9-S7-A51
	105 ± 8 %	125	≥ 1060	1.95	TX24/8.9-S7-A105
High-Flux	12 ± 8 %	14	≥ 890	5.70	TX24/8.9-H2-A12
	22 ± 8 %	26	≥ 980	4.56	TX24/8.9-H2-A22
	51 ± 8 %	60	≥ 1280	4.10	TX24/8.9-H2-A51
	105 ± 8 %	125	≥ 1370	4.56	TX24/8.9-H2-A105
	124 ± 8 %	147	≥ 1385	5.02	TX24/8.9-H2-A124
	135 ± 8 %	160	≥ 1400	7.98	TX24/8.9-H2-A135

RING CORES (TOROIDS)

Effective core parameters

SYMBOL	PARAMETER		VALUE	UNIT
$\Sigma(l/A)$	core factor (C1)		0.971	mm^{-1}
V_e	effective volume		4150	mm^3
l_e	effective length		63.5	mm
A_e	effective area		65.4	mm^2
m	mass of core (for μ_i 125)	MPP	35.8	g
		Sendust	25.5	g
		High-Flux	33.8	g

Coating

The cores are coated with epoxy. The colour is black (Sendust), grey (MPP) or khaki (High-Flux).
Maximum operating temperature is 200 °C.

Isolation voltage

AC isolation voltage : 1000 V.
Contacts are applied on the edge of the ring core, which is also the critical point for the winding operation.

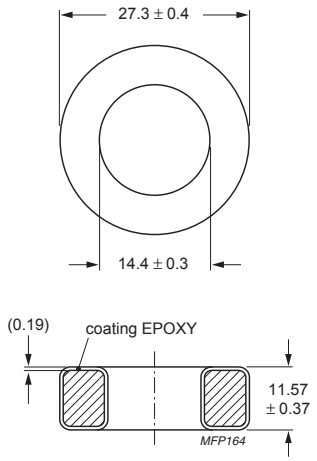

Dimensions in mm.

Fig.1 TX27/15/11 ring core.

Ring core data - Note 1. Mechanical dimensions : OD ≤ 27.7, ID ≥ 14.1, H ≤ 11.99

GRADE	A_L (nH)	μ_i	B (mT) at H = 100 kA/m; f = 10 kHz; T = 25 °C	CORE LOSS (W) at f = 100 kHz; $\hat{B}$ = 100 mT; T = 25 °C	TYPE NUMBER
MPP	18 ± 8 %	14	≥ 640	6.23	TX27/11-M2-A18
	32 ± 8 %	26	≥ 700	4.98	TX27/11-M2-A32
	75 ± 8 %	60	≥ 760	3.11	TX27/11-M2-A75
	157 ± 8 %	125	≥ 800	3.11	TX27/11-M2-A157
	185 ± 8 %	147	≥ 800	3.32	TX27/11-M2-A185
	201 ± 8 %	160	≥ 800	3.32	TX27/11-M2-A201
	217 ± 8 %	173	≥ 800	3.32	TX27/11-M2-A217
	251 ± 8 %	200	≥ 800	6.22	TX27/11-M2-A251
	377 ± 8 %	300	≥ 800	6.22	TX27/11-M2-A377
Sendust (1)	32 ± 8 %	26	≥ 1000	6.64	TX27/11-S7-A32-MC
	75 ± 8 %	60	≥ 1030	3.55	TX27/11-S7-A75-MC
	94 ± 8 %	75	≥ 1040	3.55	TX27/11-S7-A94-MC
	113 ± 8 %	90	≥ 1050	3.55	TX27/11-S7-A113-MC
	157 ± 8 %	125	≥ 1060	3.55	TX27/11-S7-A157-MC
High-Flux	18 ± 8 %	14	≥ 890	10.4	TX27/11-H2-A18
	32 ± 8 %	26	≥ 980	8.30	TX27/11-H2-A32
	75 ± 8 %	60	≥ 1280	7.47	TX27/11-H2-A75
	157 ± 8 %	125	≥ 1370	8.30	TX27/11-H2-A157
	185 ± 8 %	147	≥ 1385	9.13	TX27/11-H2-A185
	201 ± 8 %	160	≥ 1400	14.5	TX27/11-H2-A201

RING CORES (TOROIDS)

Effective core parameters

SYMBOL	PARAMETER		VALUE	UNIT
$\Sigma(l/A)$	core factor (C1)		1.21	mm^{-1}
V_e	effective volume		5480	mm^3
l_e	effective length		81.5	mm
A_e	effective area		67.2	mm^2
m	mass of core (for μ_i 125)	MPP	46.9	g
		Sendust	33.7	g
		High-Flux	44.2	g

Coating

The cores are coated with epoxy. The colour is black (Sendust), grey (MPP) or khaki (High-Flux).
Maximum operating temperature is 200 °C.

Isolation voltage

AC isolation voltage : 1000 V.
Contacts are applied on the edge of the ring core, which is also the critical point for the winding operation.

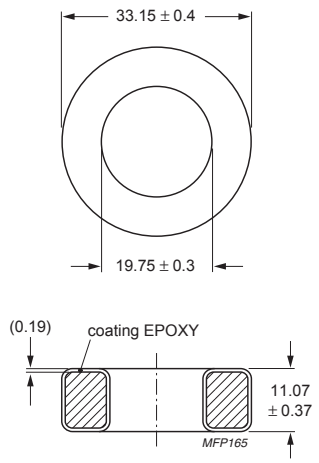

Dimensions in mm.

Fig.1 TX33/20/11 ring core.

Ring core data - Note 1. Mechanical dimensions : OD ≤ 33.83, ID ≥ 19.3, H ≤ 11.61

GRADE	A_L (nH)	μ_i	B (mT) at H = 100 kA/m; f = 10 kHz; T = 25 °C	CORE LOSS (W) at f = 100 kHz; $\hat{B}$ = 100 mT; T = 25 °C	TYPE NUMBER
MPP	14 ± 8 %	14	≥ 640	8.22	TX33/11-M2-A14
	28 ± 8 %	26	≥ 700	6.58	TX33/11-M2-A28
	61 ± 8 %	60	≥ 760	4.11	TX33/11-M2-A61
	127 ± 8 %	125	≥ 800	4.11	TX33/11-M2-A127
	150 ± 8 %	147	≥ 800	4.38	TX33/11-M2-A150
	163 ± 8 %	160	≥ 800	4.38	TX33/11-M2-A163
	176 ± 8 %	173	≥ 800	4.38	TX33/11-M2-A176
	203 ± 8 %	200	≥ 800	8.22	TX33/11-M2-A203
	305 ± 8 %	300	≥ 800	8.22	TX33/11-M2-A305
Sendust (1)	28 ± 8 %	26	≥ 1000	8.77	TX33/11-S7-A28-MC
	61 ± 8 %	60	≥ 1030	4.69	TX33/11-S7-A61-MC
	76 ± 8 %	75	≥ 1040	4.69	TX33/11-S7-A76-MC
	91 ± 8 %	90	≥ 1050	4.69	TX33/11-S7-A91-MC
	127 ± 8 %	125	≥ 1060	4.69	TX33/11-S7-A127-MC
High-Flux	14 ± 8 %	14	≥ 890	13.7	TX33/11-H2-A14
	28 ± 8 %	26	≥ 980	11.0	TX33/11-H2-A28
	61 ± 8 %	60	≥ 1280	9.86	TX33/11-H2-A61
	127 ± 8 %	125	≥ 1370	11.0	TX33/11-H2-A127
	150 ± 8 %	147	≥ 1385	12.1	TX33/11-H2-A150
	163 ± 8 %	160	≥ 1400	19.2	TX33/11-H2-A163

RING CORES (TOROIDS)

Effective core parameters

SYMBOL	PARAMETER		VALUE	UNIT
Σ(l/A)	core factor (C1)		1.97	mm^{-1}
V_e	effective volume		4060	mm^3
l_e	effective length		89.5	mm
A_e	effective area		45.4	mm^2
m	mass of core (for μ_i 125)	MPP	34.9	g
		Sendust	25.0	g
		High-Flux	32.9	g

Coating

The cores are coated with epoxy. The colour is cream (Sendust), grey (MPP) or khaki (High-Flux).
Maximum operating temperature is 200 °C.

Isolation voltage

AC isolation voltage : 1000 V.
Contacts are applied on the edge of the ring core, which is also the critical point for the winding operation.

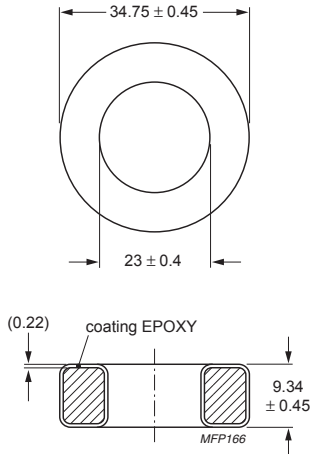

Dimensions in mm.

Fig.1 TX34/23/8.9 ring core.

Ring core data

GRADE	A_L (nH)	μ_i	B (mT) at H = 100 kA/m; f = 10 kHz; T = 25 °C	CORE LOSS (W) at f = 100 kHz; $\hat{B}$ = 100 mT; T = 25 °C	TYPE NUMBER
MPP	9 ± 8 %	14	≥ 640	6.09	TX34/8.9-M2-A9
	16 ± 8 %	26	≥ 700	4.87	TX34/8.9-M2-A16
	38 ± 8 %	60	≥ 760	3.05	TX34/8.9-M2-A38
	79 ± 8 %	125	≥ 800	3.05	TX34/8.9-M2-A79
	93 ± 8 %	147	≥ 800	3.25	TX34/8.9-M2-A93
	101 ± 8 %	160	≥ 800	3.25	TX34/8.9-M2-A101
	109 ± 8 %	173	≥ 800	3.25	TX34/8.9-M2-A109
	126 ± 8 %	200	≥ 800	6.09	TX34/8.9-M2-A126
	190 ± 8 %	300	≥ 800	6.09	TX34/8.9-M2-A190
Sendust	16 ± 8 %	26	≥ 1000	6.50	TX34/8.9-S7-A16
	38 ± 8 %	60	≥ 1030	3.47	TX34/8.9-S7-A38
	47 ± 8 %	75	≥ 1040	3.47	TX34/8.9-S7-A47
	57 ± 8 %	90	≥ 1050	3.47	TX34/8.9-S7-A57
	79 ± 8 %	125	≥ 1060	3.47	TX34/8.9-S7-A79
High-Flux	9 ± 8 %	14	≥ 890	10.2	TX34/8.9-H2-A9
	16 ± 8 %	26	≥ 980	8.12	TX34/8.9-H2-A16
	38 ± 8 %	60	≥ 1280	7.31	TX34/8.9-H2-A38
	79 ± 8 %	125	≥ 1370	8.12	TX34/8.9-H2-A79
	93 ± 8 %	147	≥ 1385	8.93	TX34/8.9-H2-A93
	101 ± 8 %	160	≥ 1400	14.2	TX34/8.9-H2-A101

RING CORES (TOROIDS)

Effective core parameters

SYMBOL	PARAMETER		VALUE	UNIT
$\Sigma(l/A)$	core factor (C1)		1.32	mm^{-1}
V_e	effective volume		6090	mm^3
l_e	effective length		89.8	mm
A_e	effective area		67.8	mm^2
m	mass of core (for μ_i 125)	MPP	51.8	g
		Sendust	37.4	g
		High-Flux	48.9	g

Coating

The cores are coated with epoxy. The colour is black (Sendust), grey (MPP) or khaki (High-Flux).
Maximum operating temperature is 200 °C.

Isolation voltage

AC isolation voltage : 1000 V.
Contacts are applied on the edge of the ring core, which is also the critical point for the winding operation.

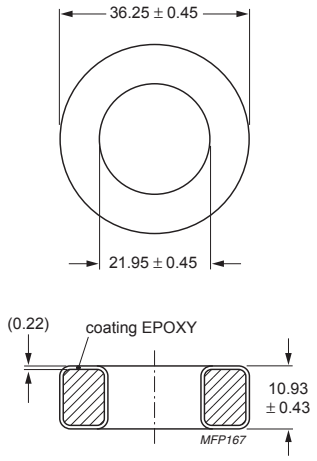

Dimensions in mm.

Fig.1 TX36/22/11 ring core.

Ring core data - Note 1. Mechanical dimensions : OD ≤ 36.63, ID ≥ 21.54, H ≤ 11.28

GRADE	A_L (nH)	μ_i	B (mT) at H = 100 kA/m; f = 10 kHz; T = 25 °C	CORE LOSS (W) at f = 100 kHz; $\hat{B}$ = 100 mT; T = 25 °C	TYPE NUMBER
MPP	13 ± 8 %	14	≥ 640	9.13	TX36/11-M2-A13
	24 ± 8 %	26	≥ 700	7.31	TX36/11-M2-A24
	56 ± 8 %	60	≥ 760	4.57	TX36/11-M2-A56
	117 ± 8 %	125	≥ 800	4.57	TX36/11-M2-A117
	138 ± 8 %	147	≥ 800	4.87	TX36/11-M2-A138
	150 ± 8 %	160	≥ 800	4.87	TX36/11-M2-A150
	162 ± 8 %	173	≥ 800	4.87	TX36/11-M2-A162
	187 ± 8 %	200	≥ 800	9.13	TX36/11-M2-A187
	281 ± 8 %	300	≥ 800	9.13	TX36/11-M2-A281
Sendust (1)	24 ± 8 %	26	≥ 1000	9.74	TX36/11-S7-A24-MC
	56 ± 8 %	60	≥ 1030	5.21	TX36/11-S7-A56-MC
	70 ± 8 %	75	≥ 1040	5.21	TX36/11-S7-A70-MC
	84 ± 8 %	90	≥ 1050	5.21	TX36/11-S7-A84-MC
	117 ± 8 %	125	≥ 1060	5.21	TX36/11-S7-A117-MC
High-Flux	13 ± 8 %	14	≥ 890	15.2	TX36/11-H2-A13
	24 ± 8 %	26	≥ 980	12.2	TX36/11-H2-A24
	56 ± 8 %	60	≥ 1280	11.0	TX36/11-H2-A56
	117 ± 8 %	125	≥ 1370	12.2	TX36/11-H2-A117
	138 ± 8 %	147	≥ 1385	13.4	TX36/11-H2-A138
	150 ± 8 %	160	≥ 1400	21.3	TX36/11-H2-A150

RING CORES (TOROIDS)

Effective core parameters

SYMBOL	PARAMETER		VALUE	UNIT
$\Sigma(l/A)$	core factor (C1)		0.920	mm^{-1}
V_e	effective volume		10500	mm^3
l_e	effective length		98.4	mm
A_e	effective area		107	mm^2
m	mass of core (for μ_i 125)	MPP	91.7	g
		Sendust	64.9	g
		High-Flux	86.5	g

Coating

The cores are coated with epoxy. The colour is black (Sendust), grey (MPP) or khaki (High-Flux).
Maximum operating temperature is 200 °C.

Isolation voltage

AC isolation voltage : 1000 V.
Contacts are applied on the edge of the ring core, which is also the critical point for the winding operation.

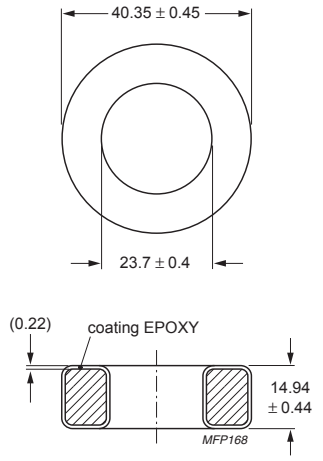

Dimensions in mm.

Fig.1 TX40/24/15 ring core.

Ring core data - Note 1. Mechanical dimensions : OD ≤ 40.72, ID ≥ 23.3, H ≤ 15.37

GRADE	A_L (nH)	μ_i	B (mT) at H = 100 kA/m; f = 10 kHz; T = 25 °C	CORE LOSS (W) at f = 100 kHz; $\hat{B}$ = 100 mT; T = 25 °C	TYPE NUMBER
MPP	19 ± 8 %	14	≥ 640	15.8	TX40/15-M2-A19
	35 ± 8 %	26	≥ 700	12.6	TX40/15-M2-A35
	81 ± 8 %	60	≥ 760	7.87	TX40/15-M2-A81
	168 ± 8 %	125	≥ 800	7.87	TX40/15-M2-A168
	198 ± 8 %	147	≥ 800	8.40	TX40/15-M2-A198
	215 ± 8 %	160	≥ 800	8.40	TX40/15-M2-A215
	233 ± 8 %	173	≥ 800	8.40	TX40/15-M2-A233
	269 ± 8 %	200	≥ 800	15.8	TX40/15-M2-A269
	403 ± 8 %	300	≥ 800	15.8	TX40/15-M2-A403
Sendust (1)	35 ± 8 %	26	≥ 1000	16.8	TX40/15-S7-A35-MC
	81 ± 8 %	60	≥ 1030	8.98	TX40/15-S7-A81-MC
	101 ± 8 %	75	≥ 1040	8.98	TX40/15-S7-A101-MC
	121 ± 8 %	90	≥ 1050	8.98	TX40/15-S7-A121-MC
	168 ± 8 %	125	≥ 1060	8.98	TX40/15-S7-A168-MC
High-Flux	19 ± 8 %	14	≥ 890	26.3	TX40/15-H2-A19
	35 ± 8 %	26	≥ 980	21.0	TX40/15-H2-A35
	81 ± 8 %	60	≥ 1280	18.9	TX40/15-H2-A81
	168 ± 8 %	125	≥ 1370	21.0	TX40/15-H2-A168
	198 ± 8 %	147	≥ 1385	23.1	TX40/15-H2-A198
	215 ± 8 %	160	≥ 1400	36.8	TX40/15-H2-A215

RING CORES (TOROIDS)

Effective core parameters

SYMBOL	PARAMETER		VALUE	UNIT
Σ(l/A)	core factor (C1)		0.540	mm^{-1}
V_e	effective volume		21300	mm^3
l_e	effective length		107	mm
A_e	effective area		199	mm^2
m	mass of core (for μ_i 125)	MPP	181	g
		Sendust	131	g
		High-Flux	171	g

Coating

The cores are coated with epoxy. The colour is black (Sendust), grey (MPP) or khaki (High-Flux).
Maximum operating temperature is 200 °C.

Isolation voltage

AC isolation voltage : 1000 V.
Contacts are applied on the edge of the ring core, which is also the critical point for the winding operation.

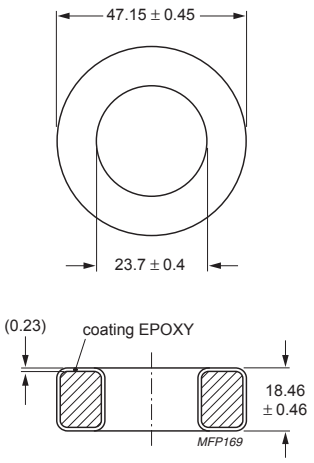

Dimensions in mm.

Fig.1 TX47/24/18 ring core.

Ring core data - Note 1. Mechanical dimensions : OD ≤ 47.63, ID ≥ 23.32, H ≤ 18.92

GRADE	A_L (nH)	μ_i	B (mT) at H = 100 kA/m; f = 10 kHz; T = 25 °C	CORE LOSS (W) at f = 100 kHz; $\hat{B}$ = 100 mT; T = 25 °C	TYPE NUMBER
MPP	32 ± 8 %	14	≥ 640	32.0	TX47/18-M2-A32
	59 ± 8 %	26	≥ 700	25.6	TX47/18-M2-A59
	135 ± 8 %	60	≥ 760	16.0	TX47/18-M2-A135
	281 ± 8 %	125	≥ 800	16.0	TX47/18-M2-A281
	330 ± 8 %	147	≥ 800	17.0	TX47/18-M2-A330
	360 ± 8 %	160	≥ 800	17.0	TX47/18-M2-A360
	390 ± 8 %	173	≥ 800	17.0	TX47/18-M2-A390
	450 ± 8 %	200	≥ 800	32.0	TX47/18-M2-A450
	674 ± 8 %	300	≥ 800	32.0	TX47/18-M2-A674
Sendust (1)	59 ± 8 %	26	≥ 1000	34.1	TX47/18-S7-A59-MC
	135 ± 8 %	60	≥ 1030	18.2	TX47/18-S7-A135-MC
	169 ± 8 %	75	≥ 1040	18.2	TX47/18-S7-A169-MC
	202 ± 8 %	90	≥ 1050	18.2	TX47/18-S7-A202-MC
	281 ± 8 %	125	≥ 1060	18.2	TX47/18-S7-A281-MC
High-Flux	32 ± 8 %	14	≥ 890	53.3	TX47/18-H2-A32
	59 ± 8 %	26	≥ 980	42.6	TX47/18-H2-A59
	135 ± 8 %	60	≥ 1280	38.3	TX47/18-H2-A135
	281 ± 8 %	125	≥ 1370	42.6	TX47/18-H2-A281

RING CORES (TOROIDS)

Effective core parameters

SYMBOL	PARAMETER		VALUE	UNIT
$\Sigma(l/A)$	core factor (C1)		0.868	mm^{-1}
V_e	effective volume		15600	mm^3
l_e	effective length		116	mm
A_e	effective area		134	mm^2
m	mass of core (for μ_i 125)	MPP	130	g
		Sendust	95.8	g
		High-Flux	123	g

Coating

The cores are coated with epoxy. The colour is black (Sendust), grey (MPP) or khaki (High-Flux).
Maximum operating temperature is 200 °C.

Isolation voltage

AC isolation voltage : 1000 V.
Contacts are applied on the edge of the ring core, which is also the critical point for the winding operation.

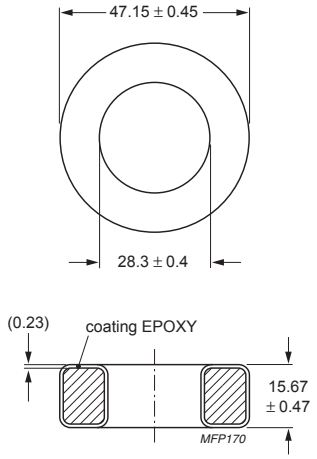

Dimensions in mm.

Fig.1 TX47/28/15 ring core.

Ring core data - Note 1. Mechanical dimensions : OD ≤ 47.63, ID ≥ 27.89, H ≤ 16.13

GRADE	A_L (nH)	μ_i	B (mT) at H = 100 kA/m; f = 10 kHz; T = 25 °C	CORE LOSS (W) at f = 100 kHz; $\hat{B}$ = 100 mT; T = 25 °C	TYPE NUMBER
MPP	20 ± 8 %	14	≥ 640	23.4	TX47/15-M2-A20
	37 ± 8 %	26	≥ 700	18.7	TX47/15-M2-A37
	86 ± 8 %	60	≥ 760	11.7	TX47/15-M2-A86
	178 ± 8 %	125	≥ 800	11.7	TX47/15-M2-A178
	210 ± 8 %	147	≥ 800	12.5	TX47/15-M2-A210
	228 ± 8 %	160	≥ 800	12.5	TX47/15-M2-A228
	246 ± 8 %	173	≥ 800	12.5	TX47/15-M2-A248
	285 ± 8 %	200	≥ 800	23.4	TX47/15-M2-A285
	427 ± 8 %	300	≥ 800	23.4	TX47/15-M2-A427
Sendust (1)	37 ± 8 %	26	≥ 1000	24.9	TX47/15-S7-A37-MC
	86 ± 8 %	60	≥ 1030	13.3	TX47/15-S7-A86-MC
	107 ± 8 %	75	≥ 1040	13.3	TX47/15-S7-A107-MC
	128 ± 8 %	90	≥ 1050	13.3	TX47/15-S7-A128-MC
	178 ± 8 %	125	≥ 1060	13.3	TX47/15-S7-A178-MC
High-Flux	20 ± 8 %	14	≥ 890	39.0	TX47/15-H2-A20
	37 ± 8 %	26	≥ 980	31.2	TX47/15-H2-A37
	86 ± 8 %	60	≥ 1280	28.0	TX47/15-H2-A86
	178 ± 8 %	125	≥ 1370	31.2	TX47/15-H2-A178

RING CORES (TOROIDS)

Effective core parameters

SYMBOL	PARAMETER		VALUE	UNIT
Σ(l/A)	core factor (C1)		1.02	mm^{-1}
V_e	effective volume		15900	mm^3
l_e	effective length		127	mm
A_e	effective area		125	mm^2
m	mass of core (for μ_i 125)	MPP	141	g
		Sendust	98.1	g
		High-Flux	133	g

Coating

The cores are coated with epoxy. The colour is black (Sendust), grey (MPP) or khaki (High-Flux).
Maximum operating temperature is 200 °C.

Isolation voltage

AC isolation voltage : 1000 V.
Contacts are applied on the edge of the ring core, which is also the critical point for the winding operation.

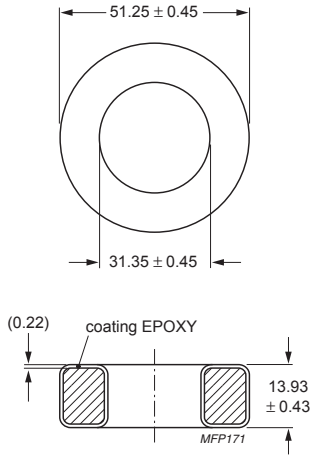

Dimensions in mm.

Fig.1 TX51/32/14 ring core.

Ring core data - Note 1. Mechanical dimensions : OD ≤ 51.69, ID ≥ 30.94, H ≤ 14.35

GRADE	A_L (nH)	μ_i	B (mT) at H = 100 kA/m; f = 10 kHz; T = 25 °C	CORE LOSS (W) at f = 100 kHz; $\hat{B}$ = 100 mT; T = 25 °C	TYPE NUMBER
MPP	17 ± 8 %	14	≥ 640	23.9	TX51/14-M2-A17
	32 ± 8 %	26	≥ 700	19.1	TX51/14-M2-A32
	73 ± 8 %	60	≥ 760	11.9	TX51/14-M2-A73
	152 ± 8 %	125	≥ 800	11.9	TX51/14-M2-A152
	179 ± 8 %	147	≥ 800	12.7	TX51/14-M2-A179
	195 ± 8 %	160	≥ 800	12.7	TX51/14-M2-A195
	210 ± 8 %	173	≥ 800	12.7	TX51/14-M2-A210
	243 ± 8 %	200	≥ 800	23.9	TX51/14-M2-A243
	365 ± 8 %	300	≥ 800	23.9	TX51/14-M2-A365
Sendust (1)	32 ± 8 %	26	≥ 1000	25.5	TX51/14-S7-A32-MC
	73 ± 8 %	60	≥ 1030	13.6	TX51/14-S7-A73-MC
	91 ± 8 %	75	≥ 1040	13.6	TX51/14-S7-A91-MC
	109 ± 8 %	90	≥ 1050	13.6	TX51/14-S7-A103-MC
	152 ± 8 %	125	≥ 1060	13.6	TX51/14-S7-A152-MC
High-Flux	17 ± 8 %	14	≥ 890	39.8	TX51/14-H2-A17
	32 ± 8 %	26	≥ 980	31.9	TX51/14-H2-A32
	73 ± 8 %	60	≥ 1280	28.7	TX51/14-H2-A73
	152 ± 8 %	125	≥ 1370	31.9	TX51/14-H2-A152

RING CORES (TOROIDS)

Effective core parameters

SYMBOL	PARAMETER		VALUE	UNIT
$\Sigma(l/A)$	core factor (C1)		0.546	mm^{-1}
V_e	effective volume		28600	mm^3
l_e	effective length		125	mm
A_e	effective area		229	mm^2
m	mass of core (for μ_i 125)	MPP	240	g
		Sendust	176	g
		High-Flux	226	g

Coating

The cores are coated with epoxy. The colour is black (Sendust), grey (MPP) or khaki (High-Flux).
Maximum operating temperature is 200 °C.

Isolation voltage

AC isolation voltage : 1000 V.
Contacts are applied on the edge of the ring core, which is also the critical point for the winding operation.

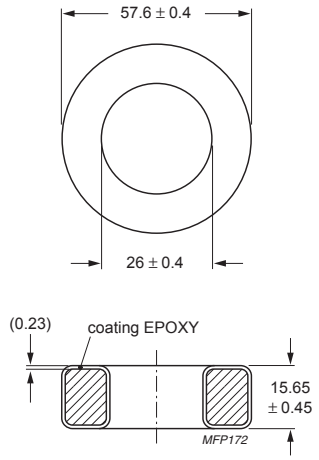

Dimensions in mm.

Fig.1 TX57/26/15 ring core.

Ring core data - Note 1. Mechanical dimensions : OD ≤ 58, ID ≥ 25.6, H ≤ 16.1

GRADE	A_L (nH)	μ_i	B (mT) at H = 100 kA/m; f = 10 kHz; T = 25 °C	CORE LOSS (W) at f = 100 kHz; $\hat{B}$ = 100 mT; T = 25 °C	TYPE NUMBER
MPP	32 ± 8 %	14	≥ 640	42.9	TX57/15-M2-A32
	60 ± 8 %	26	≥ 700	34.3	TX57/15-M2-A60
	138 ± 8 %	60	≥ 760	21.5	TX57/15-M2-A138
	287 ± 8 %	125	≥ 800	21.5	TX57/15-M2-A287
	306 ± 8 %	147	≥ 800	22.9	TX57/15-M2-A306
	333 ± 8 %	160	≥ 800	22.9	TX57/15-M2-A333
	360 ± 8 %	173	≥ 800	22.9	TX57/15-M2-A360
	417 ± 8 %	200	≥ 800	42.9	TX57/15-M2-A417
Sendust (1)	60 ± 8 %	26	≥ 1000	45.8	TX57/15-S7-A60-MC
	138 ± 8 %	60	≥ 1030	24.5	TX57/15-S7-A138-MC
	172 ± 8 %	75	≥ 1040	24.5	TX57/15-S7-A172-MC
	207 ± 8 %	90	≥ 1050	24.5	TX57/15-S7-A207-MC
	287 ± 8 %	125	≥ 1060	24.5	TX57/15-S7-A287-MC
High-Flux	32 ± 8 %	14	≥ 890	71.5	TX57/15-H2-A32
	60 ± 8 %	26	≥ 980	57.2	TX57/15-H2-A60
	138 ± 8 %	60	≥ 1280	51.5	TX57/15-H2-A138
	287 ± 8 %	125	≥ 1370	57.2	TX57/15-H2-A287

RING CORES (TOROIDS)

Effective core parameters

SYMBOL	PARAMETER		VALUE	UNIT
$\Sigma(l/A)$	core factor (C1)		0.990	mm^{-1}
V_e	effective volume		20650	mm^3
l_e	effective length		143	mm
A_e	effective area		144	mm^2
m	mass of core (for μ_i 125)	MPP	175	g
		Sendust	127	g
		High-Flux	165	g

Coating

The cores are coated with epoxy. The colour is black (Sendust), grey (MPP) or khaki (High-Flux).
Maximum operating temperature is 200 °C.

Isolation voltage

AC isolation voltage : 1000 V.
Contacts are applied on the edge of the ring core, which is also the critical point for the winding operation.

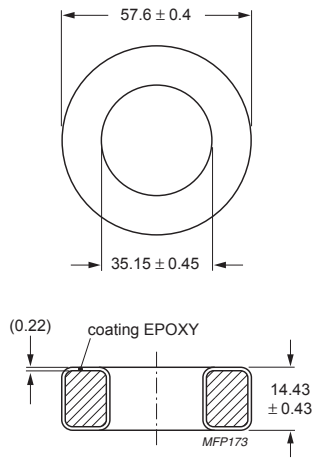

Dimensions in mm.

Fig.1 TX57/36/14 ring core.

Ring core data - Note 1. Mechanical dimensions : OD ≤ 58, ID ≥ 34.7, H ≤ 14.86

GRADE	A_L (nH)	μ_i	B (mT) at H = 100 kA/m; f = 10 kHz; T = 25 °C	CORE LOSS (W) at f = 100 kHz; $\hat{B}$ = 100 mT; T = 25 °C	TYPE NUMBER
MPP	18 ± 8 %	14	≥ 640	31.0	TX57/14-M2-A18
	33 ± 8 %	26	≥ 700	24.8	TX57/14-M2-A33
	75 ± 8 %	60	≥ 760	15.5	TX57/14-M2-A75
	156 ± 8 %	125	≥ 800	15.5	TX57/14-M2-A156
	185 ± 8 %	147	≥ 800	16.5	TX57/14-M2-A185
	200 ± 8 %	160	≥ 800	16.5	TX57/14-M2-A200
	218 ± 8 %	173	≥ 800	16.5	TX57/14-M2-A218
	250 ± 8 %	200	≥ 800	31.0	TX57/14-M2-A250
	374 ± 8 %	300	≥ 800	31.0	TX57/14-M2-A374
Sendust (1)	33 ± 8 %	26	≥ 1000	33.0	TX57/14-S7-A33-MC
	75 ± 8 %	60	≥ 1030	17.7	TX57/14-S7-A75-MC
	94 ± 8 %	75	≥ 1040	17.7	TX57/14-S7-A94-MC
	112 ± 8 %	90	≥ 1050	17.7	TX57/14-S7-A112-MC
	156 ± 8 %	125	≥ 1060	17.7	TX57/14-S7-A156-MC
High-Flux	18 ± 8 %	14	≥ 890	51.6	TX57/14-H2-A18
	33 ± 8 %	26	≥ 980	41.3	TX57/14-H2-A33
	75 ± 8 %	60	≥ 1280	37.2	TX57/14-H2-A75
	156 ± 8 %	125	≥ 1370	41.3	TX57/14-H2-A156

RING CORES (TOROIDS)

Effective core parameters

SYMBOL	PARAMETER		VALUE	UNIT
$\Sigma(l/A)$	core factor (C1)		1.13	mm^{-1}
V_e	effective volume		34700	mm^3
l_e	effective length		200	mm
A_e	effective area		177	mm^2
m	mass of core (for μ_i 125)	MPP	288	g
		Sendust	200(1)	g
		High-Flux	272	g

(1) for material permeability 60

Coating

The cores are coated with epoxy. The colour is black (Sendust), grey (MPP) or khaki (High-Flux).
Maximum operating temperature is 200 °C.

Isolation voltage

AC isolation voltage : 1000 V.
Contacts are applied on the edge of the ring core, which is also the critical point for the winding operation.

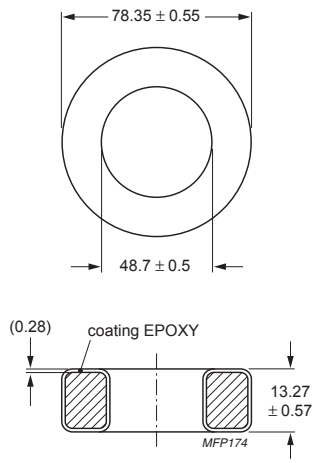

Dimensions in mm.

Fig.1 TX78/49/13 ring core.

Ring core data

GRADE	A_L (nH)	μ_i	B (mT) at H = 100 kA/m; f = 10 kHz; T = 25 °C	CORE LOSS (W) at f = 100 kHz; $\hat{B}$ = 100 mT; T = 25 °C	TYPE NUMBER
MPP	16 ± 8 %	14	≥ 640	52.1	TX78/13-M2-A16
	30 ± 8 %	26	≥ 700	41.6	TX78/13-M2-A30
	68 ± 8 %	60	≥ 760	26.0	TX78/13-M2-A68
	142 ± 8 %	125	≥ 800	26.0	TX78/13-M2-A142
	225 ± 8 %	200	≥ 800	52.1	TX78/13-M2-A225
Sendust (1)	30 ± 8 %	26	≥ 1000	55.5	TX78/13-S7-A30-MC
	68 ± 8 %	60	≥ 1030	29.7	TX78/13-S7-A68-MC
High-Flux	16 ± 8 %	14	≥ 890	86.8	TX78/13-H2-A16
	30 ± 8 %	26	≥ 980	69.4	TX78/13-H2-A30
	68 ± 8 %	60	≥ 1280	62.5	TX78/13-H2-A68
	142 ± 8 %	125	≥ 1370	69.4	TX78/13-H2-A142

Note

1. Mechanical dimensions : OD ≤ 78.9, ID ≥ 48.2, H ≤ 13.84

RING CORES (TOROIDS)

Effective core parameters

SYMBOL	PARAMETER		VALUE	UNIT
$\Sigma(l/A)$	core factor (C1)		0.879	mm^{-1}
V_e	effective volume		45300	mm^3
l_e	effective length		200	mm
A_e	effective area		227	mm^2
m	mass of core (for μ_i 125)	MPP	377	g
		Sendust	262(1)	g
		High-Flux	356	g

(1) for material permeability 60

Coating

The cores are coated with epoxy. The colour is cream (Sendust), grey (MPP) or khaki (High-Flux).
Maximum operating temperature is 200 °C.

Isolation voltage

AC isolation voltage : 1000 V.
Contacts are applied on the edge of the ring core, which is also the critical point for the winding operation.

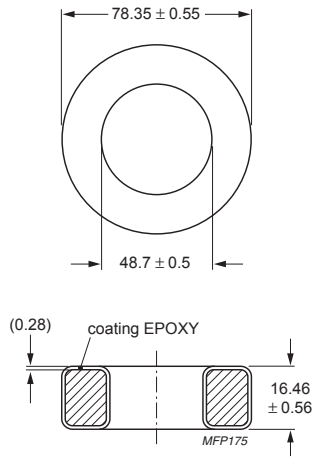

Dimensions in mm.

Fig.1 TX78/49/16 ring core.

Ring core data

GRADE	A_L (nH)	μ_i	B (mT) at H = 100 kA/m; f = 10 kHz; T = 25 °C	CORE LOSS (W) at f = 100 kHz; $\hat{B}$ = 100 mT; T = 25 °C	TYPE NUMBER
MPP	20 ± 8 %	14	≥ 640	68.0	TX78/16-M2-A20
	37 ± 8 %	26	≥ 700	54.4	TX78/16-M2-A37
	85 ± 8 %	60	≥ 760	34.0	TX78/16-M2-A85
	178 ± 8 %	125	≥ 800	34.0	TX78/16-M2-A178
Sendust	37 ± 8 %	26	≥ 1000	72.5	TX78/16-S7-A37
	85 ± 8 %	60	≥ 1030	38.7	TX78/16-S7-A85
High-Flux	20 ± 8 %	14	≥ 890	113	TX78/16-H2-A20
	37 ± 8 %	26	≥ 980	90.6	TX78/16-H2-A37
	85 ± 8 %	60	≥ 1280	81.5	TX78/16-H2-A85
	178 ± 8 %	125	≥ 1370	90.6	TX78/16-H2-A178

CBW624

PRODUCT OVERVIEW AND TYPE NUMBER STRUCTURE

Product overview iron powder ring cores (toroids)

CORE TYPE	V_e (mm^3)	A_e (mm^2)	MASS (g)
TN7.5/4.1/3	83	4.81	0.6
TN12/8/4.4	290	9.37	2
TN17/9.8/4.4	635	15.8	5
TN20/13/6	1020	20.4	7.5
TN24/15/7.5	1895	32.8	13
TN27/15/11	3720	60.4	25
TN33/20/11	5200	65.0	35

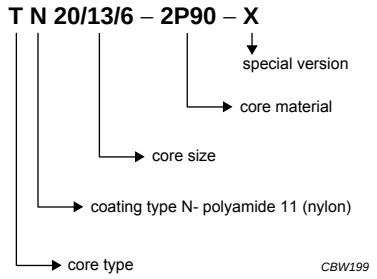

Fig.1 Type number structure for ring cores.

RING CORES (TOROIDS)

Effective core parameters

SYMBOL	PARAMETER	VALUE	UNIT
$\Sigma(l/A)$	core factor (C1)	3.58	mm^{-1}
V_e	effective volume	83	mm^3
l_e	effective length	17.3	mm
A_e	effective area	4.81	mm^2
m	mass of core	≈0.6	g

Coating

The cores are coated with polyamide 11 (PA11), flame retardant in accordance with *"UL 94V-2"*; UL file number E 45228 (M).
The colour is white.
Maximum operating temperature is 160 °C.

Isolation voltage

DC isolation voltage: 1500 V.
Contacts are applied on the edge of the ring core, which is also the critical point for the winding operation.

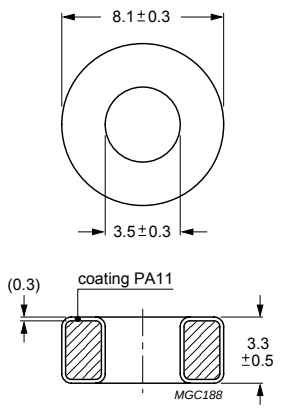

Dimensions in mm.

Fig.1 TN7.5/4.1/3 ring core.

Ring core data

GRADE	A_L (nH)	μ_i	TYPE NUMBER
2P40 sup	14 ±10%	≈40	TN7.5/4.1/3-2P40
2P50 sup	18 ±10%	≈50	TN7.5/4.1/3-2P50
2P65 sup	23 ±10%	≈65	TN7.5/4.1/3-2P65
2P80 sup	28 ±10%	≈80	TN7.5/4.1/3-2P80
2P90 sup	30 +10/−15%	≈90	TN7.5/4.1/3-2P90

RING CORES (TOROIDS)

Effective core parameters

SYMBOL	PARAMETER	VALUE	UNIT
$\Sigma(l/A)$	core factor (C1)	3.30	mm^{-1}
V_e	effective volume	290	mm^3
l_e	effective length	30.9	mm
A_e	effective area	9.37	mm^2
m	mass of core	≈2	g

Coating

The cores are coated with polyamide 11 (PA11), flame retardant in accordance with *"UL 94V-2"*; UL file number E 45228 (M).
The colour is white.
Maximum operating temperature is 160 °C.

Isolation voltage

DC isolation voltage: 1500 V.
Contacts are applied on the edge of the ring core, which is also the critical point for the winding operation.

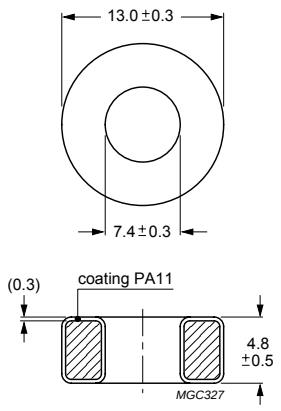

Dimensions in mm.

Fig.1 TN12/8.4/4 ring core.

Ring core data

GRADE	A_L (nH)	μ_i	TYPE NUMBER
2P40 sup	15 ±10%	≈40	TN12/8/4.4-2P40
2P50 sup	19 ±10%	≈50	TN12/8/4.4-2P50
2P65 sup	25 ±10%	≈65	TN12/8/4.4-2P65
2P80 sup	31 ±10%	≈80	TN12/8/4.4-2P80
2P90 sup	33 +10/−15%	≈90	TN12/8/4.4-2P90

RING CORES (TOROIDS)

Effective core parameters

SYMBOL	PARAMETER	VALUE	UNIT
Σ(l/A)	core factor (C1)	2.55	mm^{-1}
V_e	effective volume	635	mm^3
l_e	effective length	40.2	mm
A_e	effective area	15.8	mm^2
m	mass of core	≈5	g

Coating

The cores are coated with polyamide 11 (PA11), flame retardant in accordance with *"UL 94V-2"*; UL file number E 45228 (M).
The colour is white.
Maximum operating temperature is 160 °C.

Isolation voltage

DC isolation voltage: 1500 V.
Contacts are applied on the edge of the ring core, which is also the critical point for the winding operation.

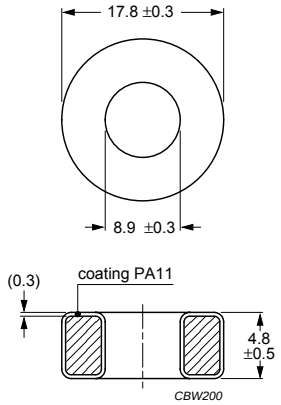

Dimensions in mm.

Fig.1 TN17/9.8/4.4 ring core.

Ring core data

GRADE	A_L (nH)	μ_i	TYPE NUMBER
2P40 sup	20 ±10%	≈40	TN17/9.8/4.4-2P40
2P50 sup	25 ±10%	≈50	TN17/9.8/4.4-2P50
2P65 sup	32 ±10%	≈65	TN17/9.8/4.4-2P65
2P80 sup	40 ±10%	≈80	TN17/9.8/4.4-2P80
2P90 sup	42 +10/−15%	≈90	TN17/9.8/4.4-2P90

RING CORES (TOROIDS)

Effective core parameters

SYMBOL	PARAMETER	VALUE	UNIT
Σ(l/A)	core factor (C1)	2.44	mm^{-1}
V_e	effective volume	1020	mm^3
l_e	effective length	49.9	mm
A_e	effective area	20.4	mm^2
m	mass of core	≈7.5	g

Coating

The cores are coated with polyamide 11 (PA11), flame retardant in accordance with *"UL 94V-2"*; UL file number E 45228 (M).
The colour is white.
Maximum operating temperature is 160 °C.

Isolation voltage

DC isolation voltage: 1500 V.
Contacts are applied on the edge of the ring core, which is also the critical point for the winding operation.

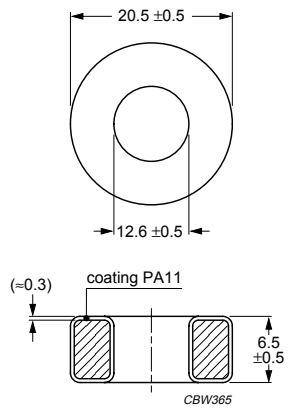

Dimensions in mm.

Fig.1 TN20/13/6 ring core.

Ring core data

GRADE	A_L (nH)	μ_i	TYPE NUMBER
2P40 sup	21 ±10%	≈40	TN20/13/6-2P40
2P50 sup	26 ±10%	≈50	TN20/13/6-2P50
2P65 sup	34 ±10%	≈65	TN20/13/6-2P65
2P80 sup	41 ±10%	≈80	TN20/13/6-2P80
2P90 sup	44 +10/−15%	≈90	TN20/13/6-2P90

RING CORES (TOROIDS)

Effective core parameters

SYMBOL	PARAMETER	VALUE	UNIT
Σ(l/A)	core factor (C1)	1.76	mm^{-1}
V_e	effective volume	1895	mm^3
l_e	effective length	57.8	mm
A_e	effective area	32.8	mm^2
m	mass of core	≈13	g

Coating

The cores are coated with polyamide 11 (PA11), flame retardant in accordance with *"UL 94V-2"*; UL file number E 45228 (M).
The colour is white.
Maximum operating temperature is 160 °C.

Isolation voltage

DC isolation voltage: 1500 V.
Contacts are applied on the edge of the ring core, which is also the critical point for the winding operation.

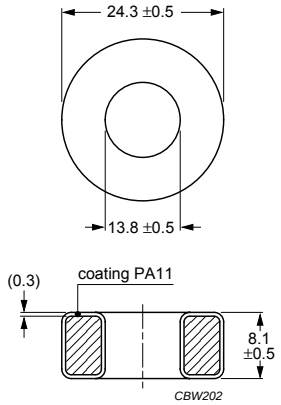

Dimensions in mm.

Fig.1 TN24/15/7.5 ring core.

Ring core data

GRADE	A_L (nH)	μ_i	TYPE NUMBER
2P40 sup	29 ±10%	≈40	TN24/15/7.5-2P40
2P50 sup	36 ±10%	≈50	TN24/15/7.5-2P50
2P65 sup	47 ±10%	≈65	TN24/15/7.5-2P65
2P80 sup	57 ±10%	≈80	TN24/15/7.5-2P80
2P90 sup	61 +10/−15%	≈90	TN24/15/7.5-2P90

RING CORES (TOROIDS)

Effective core parameters

SYMBOL	PARAMETER	VALUE	UNIT
Σ(l/A)	core factor (C1)	1.02	mm^{-1}
V_e	effective volume	3720	mm^3
l_e	effective length	61.6	mm
A_e	effective area	60.4	mm^2
m	mass of core	≈25	g

Coating

The cores are coated with polyamide 11 (PA11), flame retardant in accordance with *"UL 94V-2"*; UL file number E 45228 (M).
The colour is white.
Maximum operating temperature is 160 °C.

Isolation voltage

DC isolation voltage: 1500 V.
Contacts are applied on the edge of the ring core, which is also the critical point for the winding operation.

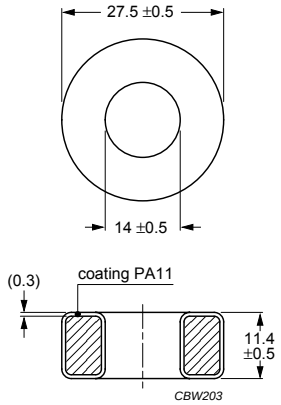

Dimensions in mm.

Fig.1 TN27/15/11 ring core.

Ring core data

GRADE	A_L (nH)	μ_i	TYPE NUMBER
2P40 sup	49 ±10%	≈40	TN27/15/11-2P40
2P50 sup	62 ±10%	≈50	TN27/15/11-2P50
2P65 sup	80 ±10%	≈65	TN27/15/11-2P65
2P80 sup	94 ±10%	≈80	TN27/15/11-2P80
2P90 sup	105 +10/−15%	≈90	TN27/15/11-2P90

RING CORES

Effective core parameters

SYMBOL	PARAMETER	VALUE	UNIT
Σ(l/A)	core factor (C1)	1.23	mm^{-1}
V_e	effective volume	5200	mm^3
l_e	effective length	80.0	mm
A_e	effective area	65.0	mm^2
m	mass of core	≈35	g

Coating

The cores are coated with polyamide 11 (PA11), flame retardant in accordance with *"UL 94V-2"*; UL file number E 45228 (M).
The colour is white.
Maximum operating temperature is 160 °C.

Isolation voltage

DC isolation voltage: 1500 V.
Contacts are applied on the edge of the ring core, which is also the critical point for the winding operation.

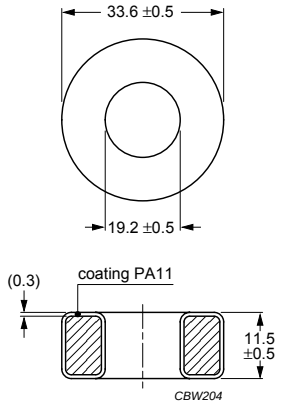

Dimensions in mm.

Fig.1 TN33/20/11 ring core.

Ring core data

GRADE	A_L (nH)	μ_i	TYPE NUMBER
2P40 sup	41 ±10%	≈40	TN33/20/11-2P40
2P50 sup	51 ±10%	≈50	TN33/20/11-2P50
2P65 sup	67 ±10%	≈65	TN33/20/11-2P65
2P80 sup	82 ±10%	≈80	TN33/20/11-2P80
2P90 sup	87 +10/–15%	≈90	TN33/20/11-2P90

FERROXCUBE - A GLOBAL COMPANY

ASIA

Taipei, Taiwan
Ferroxcube Taiwan
Tel: +886 2 6629 9999
Fax: +886 2 6628 8886

Dongguan, China
Ferroxcube China
Tel: +86 769 8738 2420
Fax: +86 769 8733 2421

EUROPE

Hamburg, Germany
Ferroxcube Germany
Tel: +49 (40) 527 28 302
Fax: +49 (40) 527 28 308

Cinisello Balsamo (MI), Italy
Ferroxcube Italy
Tel: +39 02 660 45 469
Fax: +39 02 612 91 739

Skierniewice, Poland
Ferroxcube Polska
Tel: +48 46 834 00 07
Fax: +48 46 834 00 35

Guadalajara, Spain
Hispano Ferritas
Tel: +34 (949) 247 179
Fax: +34 (949) 247 146

NORTH AMERICA

El Paso (TX), USA
Tel: +1 915 599 2328
Fax: +1 915 599 2555

San Diego (CA), USA
Tel: +1 619 207 0061
Fax: +1 619 207 0062

Phoenix (AZ), USA
Tel: +1 480 821 2634
Fax: : +1 480 855 9578

Pittsburgh (PA), USA
Tel: +1 724 602 2420
Fax: : +1 724 602 2420

For a complete listing of all Ferroxcube sales offices, distributors, and representatives, please visit "contact us" at

www.ferroxcube.com

© Ferroxcube International Holding B.V. 2013

All rights are reserved. Reproduction in whole or in part is prohibited without the prior written consent of the copyright owner.
The information presented in this document does not form part of any quotation or contract, is believed to be accurate and reliable and may be changed without notice.
No liability will be accepted by the publisher for any consequence of its use.
Publication thereof does not convey nor imply any license under patent- or other industrial or intellectual property rights.

Printed in Taiwan

Document order number: FXC 100 00002

Date of release: July 2013

FERROXCUBE
A YAGEO COMPANY