Rev	AWO #	Description	Date	Appr
-		RELEASED	8/16/12	

APPROVED: _____

DATE: _____ TITLE: _____

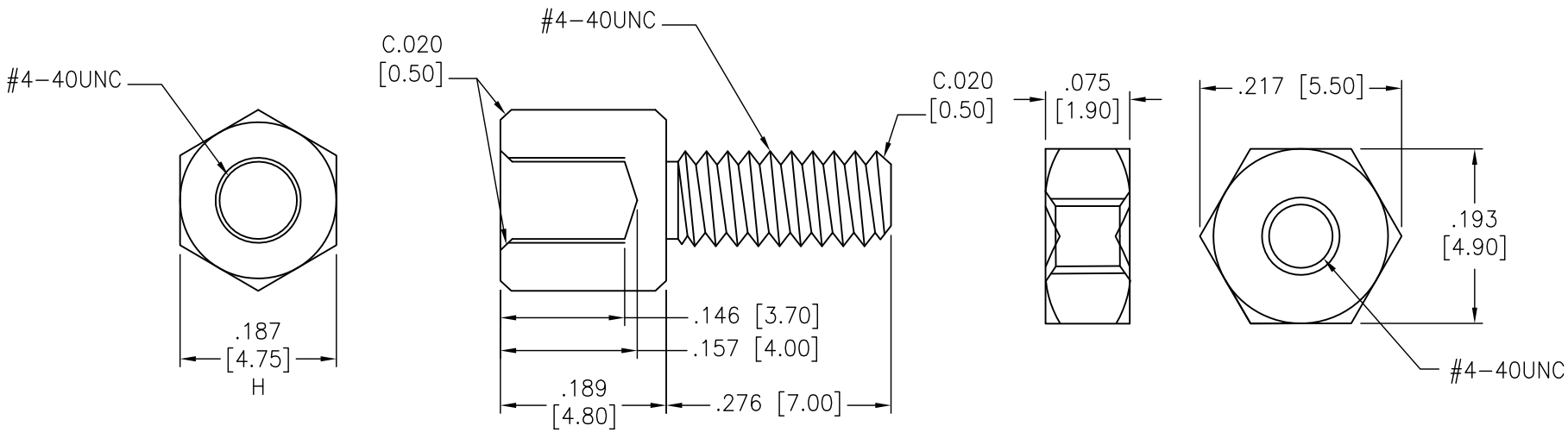

SPECIFICATIONS:
Material:
Screw: Copper, Nickel plated
Nut: Copper, Nickel plated
Environmental:
Lead free, RoHS compliant.

RoHS COMPLIANT

UNLESS OTHERWISE SPECIFIED
ALL DIMENSIONS ARE INCHES [MM]
TOLERANCES: EXCEPT AS NOTED

INCHES		HOLES	
.X	± .10	Ø.X	±.10
.XX	± .020	Ø.XX	±.015
.XXX	± .015	Ø.XXX	±.010

APPROVALS		DATE
DRAWN	AY	8/16/12
CHECKED	AH	8/16/12
APPROVED		

ADAM TECH
909 Rahway Avenue, Union, NJ 07083
Phone: 908-687-5000 Fax: 908-687-5710

TITLE: SCREW, NUT, COPPER, NICKEL PLATED

SIZE	PART NO.	REV.
X	HDW-024	-

REF: S00064T | SCALE: NTS | SHEET 1 OF 1