嘉尼企業股份有限公司CANAL ELECTRONIC CO.,LTD.

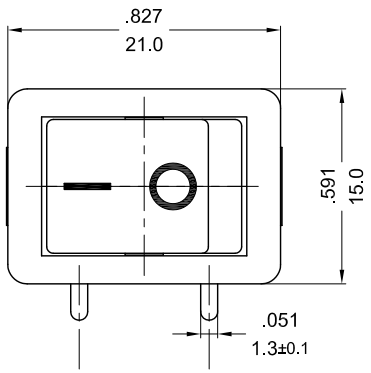

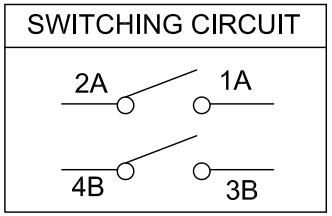

ROCKER SWITCH MODEL: MR6 SERIES

RATING: 16(8)A 125/250V~ (cURus,ENEC15)
DIELECTRIC WITHSTAND VOLTAGE: 1500VAC 1 MINUTE
INSULATION RESISTANCE:500VDC 100MΩ (MIN)
CONTACT RESISTANCE:20mΩ INITIAL(MAX)

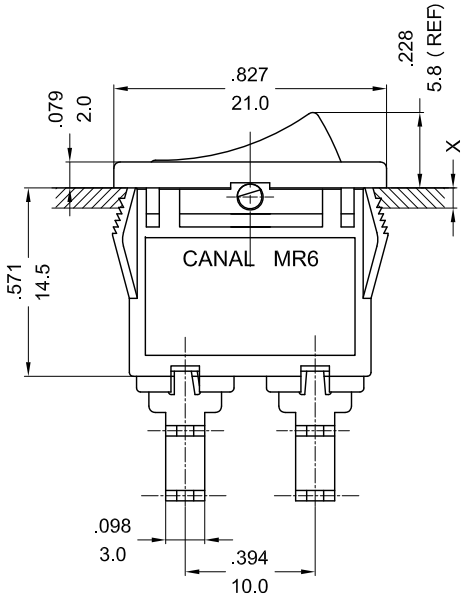

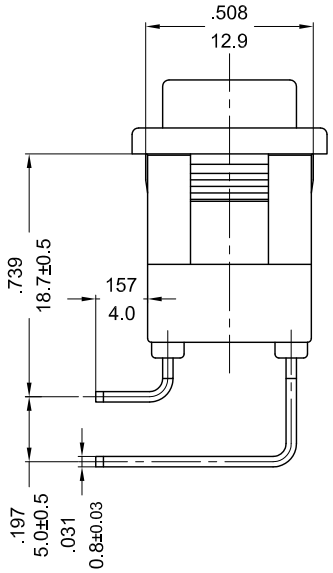

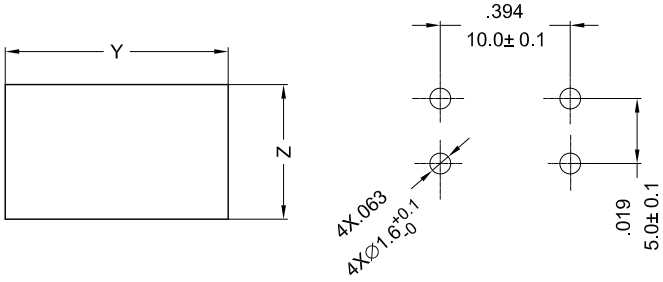

X(PANEL THICKNESS)	Y(CUTOUT DIMENSION)	Z(CUTOUT DIMENSION)
0.75~1.25mm	19.2 $^{+0.1}_{-0}$ mm	12.9 $^{+0.15}_{-0}$ mm
1.25~2mm	19.4 $^{+0.1}_{-0}$ mm	12.9 $^{+0.15}_{-0}$ mm
2~3mm	19.8 $^{+0.1}_{-0}$ mm	12.9 $^{+0.15}_{-0}$ mm

PANEL CUTOUT DIMENSION TABLE

NOTE: TOLERANCES UNLESS OTHERWISE SPECIFIED:± .012/0.3 (in/mm)

REVISION	DESCRIPTION	REVISED BY	TOLERANCES				ANGLE $\frac{1}{2}^\circ$	UNIT	mm	PART NAME	MR6 SPEC DRAWING	DWG NO
4			DRAWN BY	達志各	DESIGNED BY	蔡劍	SCALE	5/3				S5080A
3												
2			CHECKED BY	2013.10.29 10:22:14 +08'00'	APPROVED BY	2013.10.29 10:22:31 +08'00'	DATE	2013.02.22		PART NO	MR6-212C5W-NBBB-1ANC	
1 2013.02.22	依UL61058-1首次出圖	達志各										